No. 962

VOL. 1, pp. 1 to 764

[redacted]

FILED

APR 29 1958

LIBRARY

SUP[redacted]

[redacted]

Appeals from the United States District Court for the Northern District of [redacted] Division.

TRANSCRIPT OF RECORD FILED JUNE 18, 1956.

PRINTED RECORD.

In the

United States Court of Appeals

For the Seventh Circuit

Nos. 11784 - 85 - 86

THE MOJONNIER DAWSON COMPANY,
Plaintiff-Appellant,

No. 11784 *vs.*

U. S. DAIRIES SALES CORPORATION, et al.,
Defendants-Appellees,

THE MOJONNIER DAWSON COMPANY,
Plaintiff-Appellee,

No. 11785 *vs.*

U. S. DAIRIES SALES CORPORATION, et al.,
Defendants-Appellants,

The MOJONNIER DAWSON COMPANY,
Plaintiff-Appellee,

No. 11786 *vs.*

U. S. FILLER EQUIPMENT, INC., et al.,
Defendants-Appellants.

Appeals from the United States District Court for the Northern District of Illinois, Eastern Division.

INDEX.

Placita 1
Statement under Rule 10(b) 2
Complaint, filed Feb. 19, 1954 5
Answer and Counter-Claim, filed Apr. 1, 1954 10
Counter-Claim 16
Second Amended Complaint, filed Sept. 27, 1954 20
Answer to Second Amended Complaint, filed Oct. 18, 1954 29
Counter-Claim 38
Answer to Counter-Claim, filed Nov. 8, 1954 45
Answer to Second Amended Complaint, filed Dec. 10, 1954 47
Notice re Letters Patent, filed Feb. 25, 1955 56
Notice re Letters Patent, filed Feb. 28, 1955 58
Order re Counts I and III, entered Mar. 25, 1955 59
Stipulation re trial, filed Apr. 11, 1955 59
Notice re Letters Patent, filed Apr. 11, 1955 61
Notice re prior art patents, filed Apr. 11, 1955 63
Notice re prior art patents, filed Apr. 20, 1955 64
Notice re prior art patents, filed Apr. 28, 1955 66
Motion to Amend Second Amended Complaint, filed May 17, 1955 67

TRANSCRIPT OF PROCEEDINGS.

Colloquy 117

Witnesses for Plaintiff.

Testimony of:
Allen, Carl F. (Deposition of) 630
Brasile, Maurice J. 433, 1146
Brooks, Frank G. (Deposition of) 584
Campbell, Lee 360

Farrell, Richard L. 343
Fishleigh, Clarence T. 121, 1026
Hoyt, Grant V. 381
Lewis, Albert A. 515
Mojonnier, Albert B. 68, 249, 1149
Peterson, Paul S. 355
Richardson, Jack B. 385
Rosen, Joseph 367
Wainess, Harold 376

WITNESSES FOR DEFENDANTS.

Testimony of:
Botts, Joseph M. 917
Brasile, Maurice J. 984, 1162
Dawson, Lynn Scott 683
Deletzke, Norman E. H. 672, 725
Dempsey, Luther 690, 711
Geiss, Albert E. 611
Hahn, Richard 906
Melikian, Khoren C. (Deposition of) 693
Mojonnier, Albert B. 860, 952
Moravec, Robert M. 910
Richardson, Jack B. 925
Rosboro, Otis Augustus 719, 739
Shaw, John L. 1019
Voland, Richard E. 1013
Willette, Edward 933, 1140

Order re trial, entered June 2, 1955 1164
Findings of Fact, filed June 6, 1955 1165
Conclusions of Law 1167
Memorandum, filed Nov. 15, 1955 1168
Findings of Fact, filed Feb. 21, 1956 1171
Conclusions of Law 1177

Judgment, entered Feb. 21, 1956.....1178
Notice of Appeal by Mojonnier, filed Mar. 22, 1956...1179
Notice of Appeal by U. S. Dairies, filed Mar. 22, 1956..1182
Notice of Appeal by U. S. Filler Equipment, Inc., filed Mar. 22, 1956.....1184
Statement of Points of U. S. Filler Equipment, Inc...1186
Plaintiff's Statement of Points.....1187
Statement of Points of Brasile Group.....1192
Notice re Bill of Costs.....1194
Bill of Costs 1195
Statement of Clerk re Taxation of Costs.... 1199
Petition for Taxation of Costs.....1200
Bill of Costs 1201
Statement of Clerk re Taxation of Costs.....1204
Orders re Costs 1205
Complaint—No. 55-C-137, filed Jan. 25, 1955.....1207
Order consolidating causes, entered Feb. 28, 1955....1212
Order dismissing Count II—No. 55-C-137, entered Mar. 1, 1955.....1212
Answer—No. 55-C-137, filed Mar. 10, 1955.....1213
Plaintiff's Exhibit 13 A-B—Letter Aug. 19, 1954, Zinn to Mojonnier 1221
Answer to Counterclaim; filed Apr. 14, 1955.....1223

UNITED STATES LETTERS PATENT.

No. 2,667,990—A. B. Mojonnier—Feb. 2, 1954.....1226
No. Re 23830—A. B. Mojonnier—May 18, 1954.....1240
Clerk's Certificate 1255

Descriptive List of Plaintiff's Exhibits.

Exhibit Numbers	
1	Certificate of Incorporation, The Mojonnier Dawson Company, March 13, 1946.
2	Copy Mojonnier patent 2,667,990 February 24, 1954.
3	Original Mojonnier Reissue patent No. 23,830, May 18, 1954.
4	Certified copy assignment Mojonnier invention to The Mojonnier-Dawson Co. executed March 28, 1949.
5	Copy Mojonnier patent 1,956,077 April 24, 1934, Liquid Level Control Mechanism.
6	Copy Fagan & Mojonnier patent 1,956,889 July 17, 1934.
7	Copy Fagan & Mojonnier patent 1,992,693 Bottle Capper.
8	Booklet compiled by A. B. Mojonnier regarding his work with Mojonnier Brothers Company.
9	Copy Mojonnier patent 2,149,619 March 7, 1939, Float Control Electric Switch.
10	Copy Fagan & Mojonnier patent 2,138,271 November 29, 1938, Bottle Capping Machine.
11	Fagan & Mojonnier patent 2,147,366 February 14, 1939, Bottle Filling Machine.
12	Mojonnier & Miller patent 2,309,859 February 2, 1943, Art of Filling Vessels.
13	Photograph of Mojonnier Brothers vacuum type filling machine.
14A	Blueprint February 27, 1939, Sketch of Experimental Assembly for American Can Co. paper bottles, Mojonnier Brothers Co.
14B	Typewritten report on filling American Can paper bottles, referring to Sketch PX 14A.
15	Sales Circular "Mojonnier-Dawson Specialties".
16	September, 1946 issue "The Mojonnier Dawson Monthly Digest".

Exhibit Numbers	
17	Page 1 of letter July 11, 1946 from W. K. Cabot to The Mojonnier Dawson Company.
18	Page 2 of same letter.
19	Letter November 1, 1946, W. K. Cabot to The Mojonnier Dawson Co.
20	Letter January 7, 1947, W. K. Cabot to The Mojonnier Dawson Company.
21	Letter January 10, 1947, A. B. Mojonnier to W. K. Cabot.
22	Letter January 14, 1947, W. K. Cabot to The Mojonnier Dawson Company.
23	Letter February 19, 1947, W. K. Cabot to The Mojonnier Dawson Company.
24	Letter March 7, 1947, W. K. Cabot to The Mojonnier Dawson Company.
25	Photostat "Preliminary Vacuum Syruper for Frozen Food Containers" with one-page description accompanying letter PX 24.
26	Letter A. B. Mojonnier to W. K. Cabot.
27	Original sketch from which print was made, sent with letter PX 26.
28	Original sheet of data from which print was made, sent with letter PX 26.
29	Print of sketch sent with letter PX 26.
30	Letter May 9, 1947, A. B. Mojonnier to W. K. Cabot.
31	Original sketch by A. B. Mojonnier of tank, valve and solenoid.
32	Original sketch by A. B. Mojonnier of nozzle for first laboratory model, and miscellaneous sketches.
33	Production order for nozzle, job #20 Syruper.
34	Original sketch by A. B. Mojonnier Mathematical calculations regarding tank and float.
35	Original sketches (12 sheets) by A. B. Mojonnier, special filler for Bowman Dairy Co.

Exhibit Numbers

36 Photograph of filler for Bowman Dairy Co.

37 Plaintiff's Model WC1 Filler (physically).

38 Original list of materials and estimate of labor test report on Bowman Filler, April 12, 16, 17 and 18, 1948.

39 Plaintiff's Model CP Filler (physical).

40 Accused Filling Machine (physical).

41A to 41D, respectively. Fishleigh charts on Mojonnier Reissue patent 23,830.

42 Fishleigh chart of reissue claim 1.

43 Fishleigh chart of reissue claim 6.

44 Fishleigh chart of reissue claim 7.

45A to 45C, respectively. Fishleigh charts of plaintiff's commercial filling machine, Model CP.

46, 47, and 48 Fishleigh charts showing mechanical elements of reissue claims 1, 6 and 7 applied to plaintiff's commercial filling machine.

49A and 49B Fishleigh charts of Accused Filling Machine, Model MJ semi-automatic (PX 40) showing, respectively, valve closed and valve open.

49C Fishleigh chart of accused filling machine, from drawing PX 81.

49D Fishleigh chart, showing photograph of accused filling machine, Model MJ semi-automatic.

49E Fishleigh chart, enlargement of valve lever on accused filling machine.

50, 51 and 52 Fishleigh charts showing wherein the mechanical elements of reissue claims 1, 6 and 7 are found in the accused filling machine, Model MJ semi-automatic.

53 Pure Pak paper carton, ½ gallon (physical).

54 American Can paper carton, 1 quart (physical).

55 Seal King paper carton, 1 quart (physical).

56 Colgate "Barber Shave" bomb (physical).

Exhibit Numbers

57 Bridgeport Brass "Goodaire" bomb (physical).

58 Stipulation re authenticity of document, agreement December 29, 1951 between Mojonnier Dawson Company as the "Seller" and John A. Polivka and Maurice J. Brasile as "Purchasers".

59 Circular by Preformed Carton Corporation showing Mojonnier filler under agreement PX 58.

60 Stipulation re authenticity of document, agreement September 29, 1952 between U. S. Filler Equipment, Inc. and Preformed Carton Corp.

61 Letter July 7, 1953, The Mojonnier Dawson Company to Preformed Carton Corporation, U. S. Filler Equipment, Inc., and U. S. Carton Forming Corporation, terminating agreement of December 29, 1951 (PX 58).

62 Circular of Mojonnier-Dawson Electromatic Fillers.

63 Circular of Electromatic Model E-Sealking Filler, by The Mojonnier Dawson Co.

64 Dupont book on aerosols, showing Mojonnier-Dawson filling machine, pages 14-15.

65 Photograph of model aerosol filler for Williams Foam Shave.

66 Photograph of model aerosol filler, Mojonnier model IM 30.

68 Large scrapbook containing articles, publications and clippings on commercial success (physical).

69 Circular of M-D Electromatic filler, by Illinois Creamery Company.

70 Drawing entitled "Automatic Paper Bottle Filler-Sealer-Stapler, U. S. Filler Corp., Maurice Brasile, Eng. J. R. Richardson".

71 Photograph of machine, DX 33.

72 to 79, inclusive. Richardson drawings.

Exhibit Numbers	
80	Report July 2, 1953 by J. B. Richardson, U. S. Filler Corporation and J. F. Earp, Ex-Cell-O Corporation entitled "Comment on U. S. Filler Corporation Semi-Automatic Filler".
81	Drawing by Richardson entitled "Milk Carton Filling Machine, Pure Pak Cartons ½ gls. qts. pt. ¼rd qts.".
82	Report dated September 30, 1953 by J. F. Earp to C. Monroe, Pure-Pak Engineering, Ex-Cell-O Corporation, on tests of U. S. Carton Forming electrically timed filler.
83	Letter October 15, 1953, Jack B. Richardson to Ex-Cell-O Corporation, on stationery of Milk Container Equipment Corp.
84	Letter October 26, 1953, by E. R. Andre, Pure-Pak Division, Ex-Cell-O Corporation to J. Richardson, U. S. Carton Forming Corp.
85	Photograph of artist conception of Brasile filling machine.
86	Photograph of Mojonnier-Dawson filling machine at Oakside Dairy.
87	Illinois Secretary of State Certificate "Articles of Incorporation including Warrant to the Sheriff and Certification of the Attorney General of Preformed Carton Corporation"; incorporated January 23, 1952.
88	Illinois Secretary of State Certificate "Articles of Incorporation of U. S. Filler Equipment, Inc.", incorporated September 22, 1952.
89	Illinois Secretary of State Certificate "Articles of Incorporation and all Amendments thereto, including Warrant to the Sheriff and Certification to the Attorney General of the U. S. Carton Forming Corp.", incorporated November 8, 1952.

Exhibit Numbers	
90	Illinois Secretary of State Certificate "Articles of Incorporation of Purity Pack Corp.", incorporated September 2, 1953.
91	Illinois Secretary of State Certificate "Articles of Incorporation and Amendment thereto, of Milk Container Equipment Corp.", incorporated September 2, 1953.
92	Illinois Secretary of State Certificate "Articles of Incorporation and Amendment thereto of U. S. Dairies Sales Corp.", incorporated December 18, 1953.
93	Voting Trust Agreement dated June 23, 1953 between A. A. Lewis and Maurice J. Brasile as "Trustees" or "Voting Trustees" and U. S. Carton Forming Corp.
94	Voting Trust Agreement dated July 10, 1953 between A. A. Lewis as "Trustee" or "Voting Trustee" and Preformed Carton Corporation.
95	Voting Trust Agreement dated July 10, 1953 between A. A. Lewis as "Trustee" or "Voting Trustee" and Maurice J. Brasile, Pauline R. Brasile and Eugene Blum of U. S. Filler Equipment, Inc.
97	Letter October 26, 1953 from E. R. Andre, Pure-Pak Division, Ex-Cell-O Corporation to Maury Brasile, U. S. Carton Forming Corp.
98	Agreement dated October 1, 1952 between Brooks Supply Co. and U. S. Filler Equipment, Inc.
99	Circular "Pure-Pak Carton" filler showing "Electromatic" filler, by Brooks Supply Company, Inc.
100	Purchase Order No. X-690 dated June 26, 1953 by Broadview Dairy, Topeka, Kansas, to U. S. Filler Co., Woodstock, Illinois, for "1—Automatic Excello Pure-Pak carton filler".

Exhibit Numbers	
101	Letter dated July 1, 1953 from U. S. Carton Forming Corp. to Brooks Supply Company with reference to "Order No. X-690" for one automatic Ex-Cell-O Pure-Pak carton filler.
102	Letter dated July 6, 1953 from Brooks Supply Co. to U. S. Carton Forming Corp. with reference to order X-690.
103	Brochure of automatic filler by Paper Pack Corporation.
104	Brochure of semi-automatic filler by Purity Pack Corp.
105	Assignment of Invention dated June 30, 1953 by Maurice J. Brasile to Pack Equipment Corporation.
106	Illinois Secretary of State Certificate "Articles of Incorporation of Pack Equipment Corp.", incorporated June 26, 1953.
108	Brochure by U. S. Carton Forming Corporation entitled "Milk Packaging History in the making for the Smaller Dealer".
109	Filling Machine Lease by Pack Equipment Corporation.
111	Receipt dated June 10, 1953 given to Brooks Supply Co. by Ace Motel.
112	Photograph similar to PX 85.
113	Photograph similar to PX 71, marked as Plaintiff's Exhibit G in Brooks deposition.
114	Photograph of "Seal King" machine for filling "Sealright" cartons.
115	Photostat enlargement of sheet 1 of drawings, Melikian patent 2,682,984.
116	Photostatic enlargement of sheet 1 of Zsoldos patent 1,639,679.
116B	Photostat enlargement of Fig. 3 of Zsoldos patent.
116C, 116D and 116E	Photostatic enlargements of modifications of sheet 3 of Zsoldos patent.

Exhibit Numbers

117A and 117B Photostat charts of sheet 1 and sheet 3, respectively, of Engels patent 2,542,239.

118 to 122, inclusive. Fishleigh Demonstration models (physical).

123 Photostat chart of sheet 2, Ashkenaz patent 2,254,833.

124 Photostat chart of sheet 1, Zsoldos patent 1,639,679.

125 Fishleigh chart showing series fillers.

126 Fishleigh chart showing "Classification of Prior Art Patents".

127, 128 and 129 Fishleigh charts showing wherein mechanical elements of reissue claims 1, 6 and 7, respectively, are not found in prior art structures.

130 Letter dated March 10, 1953 from U. S. Carton Forming Corp. to Ralph R. Miller & Sons.

131 Letter dated March 10, 1953 from U. S. Carton Forming Corp. to Brooks Supply Co.

132A to F Credit memos for defective cartons, given by U. S. Carton Forming Corp.

133 Letter dated May 27, 1952 from John D. Faulkner, Chief, Milk & Food Branch, Division of Sanitation, Federal Security Agency to Mojonnier Dawson Co.

134 Letter dated April 30, 1953 from L. C. Pecham, Sr., Sanitarian, Regional Milk and Food Consultant, Department of Health, Education, and Welfare to Mojonnier-Dawson Company.

135 Sheet page 1-a, 1948, from Mojonnier Dawson Material Summary Book.

136 Sheet from Mojonnier Dawson Sales Ledger regarding Bowman Dairy Company.

137 Mojonnier Dawson Sales Journal from June 4, 1947 to April 30, 1948 (physical).

138 Sheet from Mojonnier Dawson Cash Book for May, 1948; and

139 Schematic layout by A. B. Mojonnier showing use of pump and balance tank.

Descriptive List of Exhibits of Brasile Group Defendants.

Exhibit Numbers	
1	Rudd-Melikian packing and shipping ticket No. 1027, 6/9/47.
2	Rudd-Melikian invoice No. 1030, 6/9/47.
3	Rudd-Melikian coffee dispenser, Model C-1, Serial No. C-10 (physical).
4	Melikian patent No. 2,682,984.
6	Compilation of prior art patents relied on by defendants.
7	File history of original patent No. 2,667,990.
8	File history of reissue patent No. 23,830.
9	Large Chart 3, Zsoldos patent drawings.
10	Dispensing valve & arm from present U. S. Dairies filler (physical).
11	Large Chart 5, modified Zsoldos drawing with Fagan float.
12	Letter, Zinn to Mojonnier, Aug. 28, 1947.
13	Letter, Zinn to Mojonnier, Oct. 20, 1947.
14	Letter, Zinn to Mojonnier, Nov. 4, 1947.
15	Letter, Zinn to Mojonnier, Jan. 9, 1948.
15A	Fireside Marshmallow print S-601.
15B	Fireside Marshmallow print S-602.
16	Letter, Dorwaldt (Golden State) to Mojonnier, Nov. 3, 1947.
17	Letter, Dorwaldt to Mojonnier, Dec. 3, 1947.
18	Letter, Mojonnier to Dorwaldt, Dec. 16, 1947.
19	Letter, Zinn to Mojonnier, Jan. 26, 1948.
20	Letter, Mojonnier Dawson to Zinn, Jan. 27, 1948.
21-22	Pages from Mojonnier Dawson purchases control ledger account for 1948.
26-26	Letter, Mojonnier to Larsen (Page Milk Co.), Feb. 9, 1948.

Exhibit Numbers	
27	Compilation of patents appearing on notice on Mojonnier Dawson filler.
28-29	Circular issued by Illinois Creamery Supply Co. re Mojonnier Dawson filler for Zinpak cartons.
30	Mojonnier Dawson infringement notice to trade, Feb. 20, 1954 (mimeo.).
31	Mojonnier Dawson infringement notice to trade, Feb. 20, 1954 (printed).
32	Typed comparison of Claim 6 of reissue application with Claim 1.
33	Brasile experimental machine (physical).
34	Letter, Aug. 31, 1953, rescinding assignment of invention.
35	Letter, Jan. 8, 1954, rescinding Preformed voting trust.
36	Letter, Jan. 8, 1954, rescinding U. S. Filler voting trust.
37	Letter, Jan. 8, 1954, rescinding U. S. Carton voting trust.
38	Resignation of Maurice J. Brasile as director of U. S. Carton, Dec. 24, 1953.
39	Resignation of Eugene Blum as director of U. S. Carton, Dec. 23, 1953.
42	Letter, Geiss (Bowman) to Mojonnier, March 9, 1948.
44	Vapor Heating Memorandum, Rosboro to Bruce, July 14, 1950.
45	Large Chart 4, Warren patent drawings.
46	Large Chart 2, drawing of accused machine.
47	Large Chart 1, Mojonnier Dawson patent drawings.
48	Sketch, inoperative Mojonnier-type filler No. 1.
49	Sketch, inoperative Mojonnier-type filler No. 2.
50	Letter, Maurice J. Brasile to Mojonnier Dawson, Feb. 11, 1954.

Exhibit Numbers

53 Mojonnier Dawson statement of account to Preformed, June 1, 1953.
55 Richardson Sketch, pusher hinge & spring, 3/8/53.
56 Richardson Sketch, stapler, cam., etc., 3/3/53.
57 Richardson Sketch, pressure plate assembly, 3/1/53.
58 Richardson Sketch, stapler block, 3/1/53.
59 Portion of float valve (physical).
60 Downspout of float valve (physical).
61 Sketch, inlet valve spout (4/2/53).
62 Letter, Mojonnier to Zinn, Aug. 28, 1946.
63 Letter, Mojonnier to Zinn, Jan. 22, 1948.
64 Sketch, "Electronic Filler", 10/14/47.
65 (A-B-C) Pages from Mojonnier Dawson sales ledger account for 1948.
66 Letter, Mojonnier to Geiss (Bowman), Mar. 15, 1948.
67 Letter, Larsen (Page Milk Co.) to Mojonnier, Feb. 4, 1946.
68 Easy-Lift Pure-Pak carton (physical).
69 Ex-Cell-O Corp. filling machine lease (printed).
70 Supplemental agreement re preforming.
71 Closing plate for use with M-D Model CP Filler (physical).
72 Letter, Brasile to Werber, Feb. 11, 1954.
73 Letter, Brasile to Brooks Supply Co., Feb. 12, 1954.
74 Milk Container statement of profit and loss, actual and projected.
75 Purity Pack & U. S. Dairies statement of profit and loss, actual and projected.
76 Consolidated projected statement of profit and loss.
77 Modified Zsoldos patent drawing No. 2.
78 Modified Zsoldos patent drawing No. 3.
79 Modified Zsoldos patent drawing No. 4.
80 Brasile license to Milk Container, Sept. 7, 1953.

1 Pleas had at a regular term of the United States District Court for the Eastern Division of the Northern District of Illinois begun and held in the United States Court Rooms in the City of Chicago in the Division and District aforesaid on the first Monday of February (it being the 6th day thereof) in the Year of Our Lord One Thousand Nine Hundred Fifty-Six and of the Independence of the United States of America, the 180th Year.

Present:

Honorable John P. Barnes, Chief District Judge.
Honorable William H. Holly, District Judge.
Honorable Philip L. Sullivan, District Judge.
Honorable Michael L. Igoe, District Judge.
Honorable William J. Campbell, District Judge.
Honorable Walter J. La Buy, District Judge.
Honorable J. Sam Perry, District Judge.
Honorable Win G. Knoch, District Judge.
Honorable Julius J. Hoffman, District Judge.
Roy H. Johnson, Clerk.
William W. Kipp, ER., Marshal.

Tuesday, February 21, 1956.

Court met pursuant to adjournment.

Present: Honorable John P. Barnes, Trial Judge.

2 IN THE UNITED STATES DISTRICT COURT

For the Northern District of Illinois,

Eastern Division.

The Mojonnier Dawson Company, a corporation,
Plaintiff,
vs.
U. S. Dairies Sales Corporation, a corporation, *et al.*,
Defendants.
} Civil Action No. 54 C 277.

STIPULATED STATEMENT UNDER RULE 10(b) OF THE RULES OF THE UNITED STATES COURT OF APPEALS FOR THE SEVENTH CIRCUIT.

1. The suit was commenced on February 19, 1954.

2. The original Plaintiff is The Mojonnier Dawson Company. The original Defendants were U. S. Dairies Sales Corporation, Purity Pack Corporation, Milk Container Equipment Corporation, U. S. Filler Equipment, Inc., U. S. Carton Forming Corporation, Paper Pack Corporation, Pack Equipment Corporation, Maurice J. Brasile, Eugene Blum and Albert A. Lewis.

3. (a) The original Complaint was filed by Plaintiff on February 19, 1954.

(b) Motion of the Defendants U. S. Filler Equipment, Inc., U. S. Carton Forming corporation, Paper Pack Corporation, Pack Equipment Corporation and Albert A. Lewis (hereinafter collectively referred to as the
3 Lewis Group defendants), to dismiss the Complaint under Rule 12(b), was filed March 17, 1954.

(c) The Answer and Counterclaim of Defendants U. S. Dairies Sales Corporation, Purity Pack Corporation, Milk Container Equipment Corporation and Maurice J. Brasile and Eugene Blum (hereinafter collectively referred to as the Brasile Group defendants) was filed April 1, 1954.

(d) Motion for Summary Judgment on behalf of the Lewis Group defendants was filed April 12, 1954.

(e) Plaintiff's Answer to the Counterclaim of the Brasile Group defendants was filed on May 6, 1954.

(f) First Amended Complaint was filed by Plaintiff on May 18, 1954.

(g) Answer of U. S. Dairies Sales Corporation, Purity Pack Corporation and Milk Container Equipment Corporation to First Amended Complaint, and Counterclaim of said Defendants, were filed June 28, 1954.

(h) Motion of Maurice J. Brasile and Eugene Blum to dismiss Complaint, or in the alternative for Sum-
4 mary Judgment, was filed June 28, 1954.

(i) Plaintiff's Answer to Counterclaim of U. S. Dairies Sales Corporation, Purity Pack Corporation and Milk Container Equipment Corporation and further Complaint of Plaintiff were filed July 26, 1954.

(j) Motion of U. S. Dairies Sales Corporation, Purity Pack Corporation and Milk Container Equipment Corporation to strike Plaintiff's "Further Cause of Action" and "Count III" was filed August 16, 1954.

(k) Motion of Brasile Group defendants to dismiss Count II and Count III of Complaint as amended filed August 30, 1954.

(l) Second Amended Complaint filed by Plaintiff September 27, 1954.

(m) Answer of Brasile Group defendants to Second Amended Complaint, and Counterclaim of said Defendants, filed October 18, 1954.

(n) Plaintiff's Answer to Counterclaim of the Brasile Group defendants filed November 8, 1954.

(o) Answer of the Lewis Group defendants to Second Amended Complaint filed December 10, 1954.

5 (p) Motion of Brasile Group defendants for order directing that issues relating to Count I and Count III respectively of the Second Amended Complaint be tried separately and in that sequence was orally presented on March 22, 1955.

(q) Plaintiff's Amendment to Second Amended Complaint was filed May 17, 1955.

(r) Motion of the Lewis Group defendants for directed finding at close of Plaintiff's case filed May 13, 1955.

(s) Order for directed finding in favor of Lewis Group defendants was entered June 2, 1955.

(t) Findings of Fact and Conclusions of Law relative to the Lewis Group defendants were entered June 6, 1955.

(u) Order dismissing Complaint as to the Lewis Group defendants and ordering that said Defendants recover their costs of suit entered February 21, 1956.

(v) Findings of Fact and Conclusions of Law relative to the Brasile Group defendants were entered February 21, 1956.

6 4. No Defendant was arrested, nor bail taken, nor property attached.

5. The case was tried before the Honorable John P. Barnes. Trial commenced on May 17, 1955 and was concluded on June 10, 1955. Final arguments were heard and concluded on September 19, 1955.

6. No question was referred to a commissioner, master or referee.

7. This was not a jury case.

8. (a) Memorandum opinion of the Court was entered November 15, 1955 and final order of judgment was entered February 21, 1956.

(b) Notice of appeal was filed by Plaintiff on March 22, 1956.

(c) Notice of cross-appeal on behalf of the Brasile Group defendants was filed on March 22, 1956.

(d) Notice of cross-appeal on behalf of the Lewis Group defendants was filed on March 22, 1956.

9. This action was consolidated with Civil Action 55 C 137 by order entered February 28, 1955.

10. Civil Action 55 C 137 is at issue but trial of
7 this action has been continued until after disposition of Civil Action 54 C 277.

Approved for Plaintiff,
John F. McCanna,
Attorney for Plaintiff,

Approved for Brasile Group defendants,
Richard E. Voland,
Attorney for Brasile Group defendants,

Approved for Lewis Group defendants,
Louis Bernat,
Attorney for Lewis Group defendants.

8 IN THE UNITED STATES DISTRICT COURT

For the Northern District of Illinois,

Eastern Division.

The Mojonnier Dawson Company, a corporation, *Plaintiff*, *vs.* U. S. Dairies Sales Corporation, a corporation; Purity Pack Corporation, a corporation; Milk Container Equipment Corporation, a corporation; U. S. Filler Equipment, Inc. a corporation; U. S. Carton Forming Corporation, a corporation; Paper Pack Corporation a corporation; Pack Equipment Corporation, a corporation; Maurice Brasile, Eugene Blum and Albert A. Lewis, *Defendants*.	No. 54-C-277.

Be It Remembered, that on to wit, the 19th day of February, 1954, the above entitled action was commenced by the filing of the Complaint in the office of the Clerk of the United States District Court for the Northern District of Illinois, Eastern Division, in words and figures following, to wit:

9 IN THE UNITED STATES DISTRICT COURT.

* * (Caption—54-C-277) * *

COMPLAINT.

(1) Plaintiff, The Mojonnier Dawson Company, is an Illinois corporation, with its principal office and place of business at 9151 Fullerton Avenue, Franklin Park, Illinois.

(2) Defendant, U. S. Dairies Sales Corporation, is an Illinois corporation doing business at and having a principal place of business at 326 W. Jackson Street, Woodstock, Illinois.

(3) Defendant, Purity Pack Corporation, is an Illinois corporation doing business at and having a principal place of business at 643 McHenry Avenue, Woodstock, Illinois.

(4) Defendant, Milk Container Equipment Corporation, is an Illinois corporation doing business at and having a principal place of business at 643 McHenry Avenue, Woodstock, Illinois.

(5) Defendant, U. S. Filler Equipment, Inc., is an Illinois corporation doing business at and having a principal place of business at 333 Lake Street, Woodstock, Illinois, and 725 Lake Avenue, Woodstock, Illinois.

(6) Defendant, U. S. Carton Forming Corporation, is an Illinois corporation doing business at and having a principal place of business at 723-25 W. Lake Street, Woodstock, Illinois.

(7) Defendant, Paper Pack Corporation, is an Illinois corporation doing business at and having a principal place of business at 69 W. Washington Street, Room 805, Chicago 2, Illinois.

(8) Defendant, Pack Equipment Corporation, is an Illinois corporation doing business at and having a principal place of business at 69 W. Washington Street, Room 805, Chicago 2, Illinois.

(9) Defendants, Maurice Biasile, Eugene Blum and Albert A. Lewis are residents and inhabitants of the Northern District of Illinois, Eastern Division, respectively residing at 331 Johnson Avenue, Woodstock, Illinois, 902 Bunker Street, Woodstock, Illinois, and 291 Marshman, Highland Park, Illinois.

(10) This is an action arising under the patent laws of the United States, and for unfair competition in trade, and jurisdiction of this Court is based on Title 28, Section 1338 of the United States Code.

11 Count I.

(11) On February 2, 1954, United States Letter Patent No. 2,667,990 were duly and legally issued to plaintiff for an invention of Albert B. Mojonnier, entitled Dispensing Mechanism With Time Controlled Flow, and plaintiff ever since has been and now is the sole owner and

holder of said Letters Patent and of all rights of recovery thereunder.

(12) Plaintiff has for many years last past manufactured and sold carton filling apparatus embodying the inventions of said Letters Patent.

(13) The corporate defendants have, on information and belief, subsequent to the date of issuance of said Letters Patent, jointly and severally infringed said Letters Patent within this District and elsewhere within the United States by either manufacturing or selling filling apparatus embodying the inventions described in said Letters Patent, which infringing apparatus is substantially copied from plaintiff's apparatus, and said individual defendants, acting in the capacity of incorporators and officers of some or all of said corporate defendants, have infringed said Letters Patent and contributed to said infringement in directing the activities of some or all of said corporate defendants, and said infringement by said defendants has been deliberate and wilful and without the consent of plaintiff, and such infringement will continue unless defendants are enjoined by this Court.

(14) Defendants have unlawfully derived profits and gains from such infringement which plaintiff would otherwise have received, and plaintiff has thereby been irreparably damaged, and if such infringement continues will be caused further irreparable damage.

12 Count II.

(15) Long prior to the formation of any of the corporate defendants and at least as early as 1949, plaintiff adopted and used and now uses on its said filling apparatus embodying the invention of said Letters Patent the trade-mark "Electromatic", and plaintiff, continuously since, has sold its said filling apparatus bearing said trademark "Electromatic" in interstate commerce throughout the United States.

(16) Long prior to the formation of any of the corporate defendants and at least as early as 1949, plaintiff adopted and used and now uses on its said filling apparatus embodying the invention of said Letters Patent the trademark "M-D", and plaintiff, continuously since, has sold its said filling apparatus bearing said trade-mark "M-D" in interstate commerce throughout the United States.

(17) Plaintiff's filling appartus sold under the trade-

marks "Electromatic" and "M-D" are of high quality and exceptional utility, and are well and favorably known to the trade and public as being dependable, reliable, and entitled to full public confidence, and the trade-marks "Electromatic" and "M-D", standing either alone or separately, have become the means by which said products are identified as coming from plaintiff.

(18) Plaintiff has built up and now has a valuable good will in its trade-marks "Electromatic" and "M-D".

(19) Long after the adoption and use by plaintiff of its trade-marks "Electromatic" and "M-D" for filling apparatus, and long after said trade-marks had acquired a distinctiveness with the trade and public as indi-
13 cating plaintiff's filling apparatus, the corporate defendants, jointly and severally, under the direction of the individual defendants, began the distribution and sale of filling apparatus substantially copied from plaintiff's filling apparatus, bearing plaintiff's trade-mark "Electromatic", and also bearing the designation "M-J".

(20) Plaintiff is informed and believes and states the fact to be that the defendants adopted and began the use of the trade-mark "Electromatic" and of the designation "M-J", as herein alleged, with full knowledge of plaintiff's long prior and extensive use of its trade-marks "Electromatic" and "M-D", and with full knowledge that the trade and public associate "Electromatic" and "M-D", when applied to or used in connection with filling apparatus, with plaintiff and plaintiff's products only.

(21) Plaintiff is informed and believes and states the fact to be that defendants adopted and began the use of the designation "M-J", as herein alleged, with full knowledge of the fact that plaintiff is and for a long time past has been referred to in the trade by the abbreviations "MOJ" and "MJ", which abbreviations are taken from the word "Mojonnier".

(22) Plaintiff is informed and believes and states the fact to be that the aforesaid use by defendants of plaintiff's trade-mark "Electromatic" and of the designation "M-J" is deliberate and is for the purpose of giving defendants' products a saleability which they otherwise would not have.

(23) The aforesaid use by the defendants of "Electromatic" and "M-J", as herein alleged, infringes plaintiff's common law rights in its trade-marks "Electromatic" and "M-D".

14 (24) The use by defendants of the designation "M-J", as herein alleged, constitutes unfair competition with plaintiff in that it is calculated to and is likely to and does result in confusion and passing off among the trade and public of defendants' filling apparatus as being products of plaintiff or of a concern connected with plaintiff, and does mislead the trade into believing that defendants are a branch or dealer of plaintiff, or are in some way connected with plaintiff.

(25) Defendants' use of plaintiff's trade-mark "Electromatic" and of the designation "M-J" is without the consent of plaintiff.

(26) Plaintiff has requested the defendants to discontinue their use of its trade-mark "Electromatic" and the designation "M-J", but defendants have refused to comply with said request and continue unlawfully to use said trade-mark and said designation.

(27) The use by the defendants of plaintiff's trademark "Electromatic" and of the designation "M-J" is damaging to the plaintiff and will continue to damage the plaintiff unless restrained by this Court.

Wherefore plaintiff prays;

1. That the defendants, their agents, servants, employees, privies, successors and assigns, be at first during the pendency of this action and afterwards perpetually enjoined and restrained from:

(a) Further infringement of said Letters Patent.

(b) Using the word "Electromatic" or the designation "M-J", or any reproduction, counterfeit, copy or colorable imitation thereof, as a brand name or trade-mark for filling apparatus.

15 (c) Using the name "Electromatic" and the designation "M-J" in any manner whatsoever in connection with the manufacture, sale, or offering for sale of filling apparatus.

(d) Doing any act or thing calculated to induce the belief that the defendants or their merchandise are in any way connected with plaintiff or its products.

2. That defendants be required to account to plaintiff for all damages suffered by plaintiff by reason of the patent infringement; and all profits realized by defendants and damages suffered by plaintiff by reason of the trade-mark infringement and unfair competition herein complained of.

3. That the costs of this action be assessed against defendants.

4. That plaintiff may have such other and further relief as the equities may require and as may to this Court seem meet and just.

The Mojonnier Dawson Company,
By McCanna & Morsbach,
John F. McCanna,
Attorneys for Plaintiff,
5600 W. Roosevelt Road,
Chicago 50, Illinois.

16 And afterwards on, to wit, the 1st day of April, 1954, came the Defendants, U. S. Dairies Sales Corp., Purity Pack Corp., Milk Container Equipment Corp., Maurice J. Brasile and Eugene Blum, by their attorneys and filed in the Clerk's office of said Court their certain Answer and Counter-claim in words and figures following, to wit:

17 IN THE UNITED STATES DISTRICT COURT.

* * (Caption—54-C-277) * *

ANSWER AND COUNTER-CLAIM OF DEFENDANTS U. S. DAIRIES SALES CORP., PURITY PACK CORP., MILK CONTAINER EQUIPMENT CORP., MAURICE J. BRASILE AND EUGENE BLUM.

Answer.

For answer to the Complaint herein the defendants U. S. Dairies Sales Corp., Purity Pack Corp., Milk Container Equipment Corp., Maurice J. Brasile and Eugene Blum, by their attorneys Wilkinson, Huxley, Byron & Hume and Deprees, Fiske, O'Brien & Thomson, say:

(1-4) These defendants admit the allegations contained in paragraphs (1) to (4) of said Complaint.

(5) These defendants admit that U. S. Filler Equipment, Inc. is an Illinois corporation, and deny each and every the other allegations contained in paragraph (5) of said Complaint.

(6-8) These defendants have no knowledge or information sufficient to form a belief as to the truth of the allega-

tions contained in paragraphs (6), (7) and (8) of said Complaint and so neither admit nor deny said allegations.

(9) These defendants have no knowledge sufficient to form a belief as to the truth of the allegations contained in paragraph (9) of said Complaint concerning the defendant Albert A. Lewis and so neither admit nor
18 deny said allegations. These defendants admit the other allegations contained in said paragraph (9).

(10) These defendants admit that the Complaint purports to state an action arising under the patent laws of the United States, and for alleged unfair competition in trade, and further admit that jurisdiction of this Court is based on Title 28, Section 1338 of the United States Code.

As To Count I.

(11) These defendants admit that United States Letters Patent No. 2,667,90 were issued on February 2, 1954, to Albert B. Mojonnier, as the inventor and applicant therefor, and to The Mojonnier Dawson Co. as the assignor, but deny that said Letters Patent were duly and legally issues. These defendants have no knowledge of the other allegations contained in paragraph (11) of the Complaint, and therefore deny the same, and leave plaintiff to full, strict and adequate proof thereof.

(12) These defendants admit that plaintiff has manufactured and sold carton filling apparatus but are without knowledge and information sufficient to form a belief with respect to the other allegations contained in paragraph (12) of said Complaint and therefore deny the same and leave plaintiff to full, strict and adquate proof thereof.

(13) These defendants deny each and every allegation contained in paragraph (13) of said Complaint.

(14) These defendants deny each and every allegation contained in paragraph (14) of said Complaint.

As To Count II.

(15) Answering paragraph (15), these defendants have no knowledge as to the allegations that long prior to the formation of any of the corporate defendants and at
19 least as early as 1949, plaintiff adopted and used and now uses on its filling apparatus embodying the alleged invention of said Letters Patent the alleged trade-

mark "Electromatic". These defendants are also without knowledge as to the allegation that the plaintiff has continuously since that time sold its filling apparatus bearing said alleged trade-mark "Electromatic" in interstate commerce throughout the United States.

(16) Answering paragraph (16), these defendants have no knowledge as to the allegations that plaintiff, long prior to the formation of any of the corporate defendants, and at least as early as 1949, adopted and used and now uses on its filling apparatus embodying the alleged invention of said Letters Patent, the alleged trade-mark "M-D". These defendants are also without knowledge as to the allegation that plaintiff has continuously since sold its filling apparatus bearing said alleged trade-mark "M-D" in interstate commerce throughout the United States.

(17) Answering paragraph (17), these defendants deny the allegations contained therein.

(18) Answering paragraph (18), these defendants deny the allegations contained therein.

(19) These defendants as hereinabove stated say that they have no knowledge sufficient to form a belief as to the truth of the allegations implied in paragraph (19) of said Complaint to the effect that plaintiff has adopted and used and now uses on its said filling apparatus the alleged trade-mark "Electromatic" and the alleged trade-mark "M-D", and these defendants deny that the alleged trademarks "Electromatic" and "M-D" have acquired a distinctiveness with the trade and public as indicating plaintiff's filling apparatus. Further answering said paragraph (19), these defendants in any event deny that they or any of them at any time have distributed or sold filling apparatus substantially copied from plaintiff's filling apparatus, or that they at any time have distributed or sold filling apparatus bearing plaintiff's alleged trademark "Electromatic" or plaintiff's alleged trade-mark "M-J". These defendants admit as hereinafter more particularly averred, that they formerly engaged in the distribution and sale of filling apparatus bearing the designation "M-J" but aver that the use of said designation has been discontinued.

(20-24) These defendants deny each and every the allegations contained in paragraphs (20), (21), (22), (23) and (24) of said Complaint.

(25) Answering paragraph (25), these defendants admit that no consent has ever been obtained from plaintiff

for the use of the term "Electromatic" and of the designation "M-J".

(26) Answering paragraph (26), these defendants deny that plaintiff at any time requested them to discontinue their use of the designation "M-J"; they deny that they have continued to use said designation; they further deny that the use of said designation was at any time unlawful; and they aver that their use of said designation has been discontinued. Further answering paragraph (26), these defendants admit that plaintiff requested them to discontinue their use of the alleged trade-mark "Electromatic" but they deny that they refused to comply with said request and aver that when so requested they promptly ceased the use of said term, and they deny that their use of said term was at any time unlawful.

(27) These defendants deny each and every the allegations contained in paragraph (27) and they aver as aforesaid that the use by them of said alleged trade-mark "Electromatic" and said designation "M-J", has been discontinued.

21 Affirmative Defenses.

Count 1.

(28) Further answering the allegations of the Complaint, defendants aver that said Patent No. 2,667,990, alleged to be infringed, is invalid for the following reasons:

(a) Because said Mojonnier was not the original and first inventor or discoverer of any material or substantial part of the subject matter of said patent.

(b) Because the subject matter set forth in said patent, insofar as the same may have been original with the said Mojonnier, was not sufficiently useful to warrant the issuance of a patent thereon.

(c) Because the subject matter of said patent, prior to the supposed invention or discovery thereof by the said Mojonnier, was patented or described in printed publication as specified in the attached list marked "Schedule A—List of United States and Foreign Patents and Publications".

(d) Because the subject matter of said patent, more than one year prior to the application of said patent by said Mojonnier, had been patended or described in patents or printed publications as specified in said Schedule A.

(e) Because the subject matter of said patent, more than one year prior the application for said Letters Patent by said Mojonnier was in public use or on sale in the United States by the persons and at the places set forth in the attached list marked "Schedule B—List of Prior Users, Prior Inventors or Persons Having Prior Knowledge".

(f) Because the subject matter of said patent, prior to the alleged invention or discovery thereof by said Mojonnier, was invented or was well known or used
22 in the United States by the persons and at the places set forth in said Schedule B.

(g) Because the state of the art at the time of the alleged invention of the subject matter of said patent was such that in view thereof, the production of said subject matter required no more than the normal skill expected of persons engaged in the art to which said alleged invention relates.

(h) Because the alleged invention of said patent is not described or shown in said patent in such full, clear, concise and exact terms as to enable anyone skilled in the art to practice the alleged invention.

(i) Because said Patent No. 2,667,990 does not particularly point out or distinctly claim the alleged invention.

(j) Because the description of the alleged invention, as set forth in said patent, is inaccurate or misleading, or is insufficient to form a basis for the claims of said patent or any of them.

(29) Further answering the allegations of said Complaint, defendants aver:

(a) That the state of the art at the time of the alleged invention of the subject matter of said Patent No. 2,667,990 was such, and

(b) That the proceedings in the United States Patent Office which resulted in the issuance of said Letters Patent No. 2,667,990 were such, and

(c) That the disclosure in said Letters Patent No. 2,667,990 is so limited, that the claims in said Letters Patent, when properly construed, in view thereof, fail to include any subject matter used by the defendants subsequent to the issuance of said Letters Patent No. 2,667,990.

23 (30) Further answering the allegations of said Complaint, these defendants aver that plaintiff is estopped by the proceedings in the United States Patent

Office in the matter of the application for said Letters Patent No. 2,667,990, and by the acquiescence by the plaintiff in and to the rulings and rejections of the Commissioner of Patents in the negotiations for the issuance of said Letters Patent, and by the limitations imposed by the Patent Office during said negotiations, from claiming that his alleged invention has such scope, or that his patent is capable of any interpretation that comprehends or embraces any devices manufactured by defendants.

Count 2.

(31) Further answering the allegations of said Complaint, these defendants aver that their use of the word "Electromatic" was limited to describing the filling apparatus sold by them and that these particular devices are identified in the market by the trade names, U. S. Dairies Sales Corp., Purity Pack Corp., or Milk Container Equipment Corp., and were formerly identified by the model designation "M-J".

(32) Further answering the allegations of said Complaint, these defendants aver that they never have nor presently do use the word "Electromatic" as a trade-mark in connection with the manufacture or sale of any products. These defendants further aver that the word "Electromatic" as used in connection with the manufacture and sale of apparatus which is both electric and automatic in its operation is descriptive and wholly incapable of functioning as a trade-mark.

(33) Further answering the allegations of said Complaint, these defendants aver that the word "electromatic" has come into such wide use for so many products that if said word ever had any trade-mark significance, such significance has been lost.

24 (34) Further answering the allegations of said Complaint, these defendants aver that plaintiff has in the past used and continues to use the word "electromatic" descriptively in connection with its filling appartus and therefore is not entitled to protection of the alleged trade-mark, having dissipated any trade-mark significance which the term may have originally had.

(35) Answering further the allegations of said Complaint, these defendants aver that the designation "M-J" which they formerly placed on their filling appartus is not confusingly similar with the alleged trade-mark "M-D"

of the plaintiff, particularly since it was at all times used by defendants as the model designation rather than as a trade-mark.

Counter-Claim.

I.

Further answering any by way of Counter-Claim, these defendants, U. S. Dairies Sales Corp., Purity Pack Corp., Milk Container Equipment Corp., Maurice J. Brasile and Eugene Blum (Counter-Claim plaintiffs herein) state that the jurisdiction of the Court in regard to the following Counter-Claim is based on the fact that the plaintiff (Counter-Claim defendant herein) has, by filing this suit, placed itself under the jurisdiction of this Court: also the defendants (Counter-Claim plaintiffs herein) are praying for equitable relief against plaintiff herein.

II.

That plaintiff, being fully aware of the limitations expressed in said U. S. Letters Patent No. 2,667,990 and in the claims thereof and well knowing that defendants' product did not and does not infringe said claims and that said claims are invalid if construed broadly enough to cover defendants' product, have been and still are wrongfully and illegally harassing distributors and customers of defendants by charging said distributors and customers with infringement of said patent in the sale or use of defendants' product.

III.

That plaintiff has exceeded the limitations of good faith is serving notice of alleged infringement of its said U. S. Letters Patent No. 2,667,990 in that:

A. Prior to February 2, 1954 plaintiff, being fully aware of the fact that said U. S. Letters Patent had not yet issued, did wrongfully and illegally harass distributors and customers of defendants by charging said distributors and customers with infringement of said patent in the sale and use of said defendants' product, and

B. Plaintiff, with the intention and purpose of destroying defendants' business and eliminating defendants as competitors of plaintiff, has by various means unnecessarily and repeatedly charged the distributors and cus-

tomers of defendants with infringement of said patent in the sale and use of defendants' product.

IV.

That by means of the wrongful acts hereinabove described, plaintiff has engaged in and is engaging in unfair competition against these defendants.

V.

As a direct and proximate result of the said wrongful acts of plaintiff, these defendants have been wrongfully deprived of the patronage of their customers and prospective customers and their reputation and goodwill have been greatly injured, and consequently these defendants have been damaged in their business and property down to the date of the filing of this Counter-Claim in the
26 sum of Two Hundred Thousand Dollars ($200,000.00), and under the circumstances herein set forth these defendants are entitled to said amount as compensatory damages, and a like amount as exemplary or punitive damages, together with their costs of suit.

VI.

That unless restrained by order of this Court, the plaintiff herein will continue its efforts to destroy the business of these defendants and eliminate these defendants as competitors, and will continue to commit the wrongful acts and to engage in the illegal course of conduct, all as hereinabove described, and these defendants will thereby suffer further, irreparable damage, and therefore these defendants have no plain speedy and adequate remedy at law.

Wherefore, these defendants pray:

1. That the Complaint herein be dismissed for want of equity, with all costs to these defendants, and that in addition, in view of the misuse by plaintiff of the aforesaid patent and the deliberate and wanton disregard of these defendants' rights herein, there by allowed by the Court to these defendants a reasonable attorneys' fee.

2. That this Court by its writ of injunction perpetually enjoin and restrain plaintiff from continuing its unfair and illegal practices as hereinabove described, and particularly from in any manner asserting the patent in suit

against any distributor, jobber or customer of these defendants, and from continuing in any manner to give notice to the actual or prospective distributors, jobbers and customers of these defendants that the manufacture, sale or use of the product of these defendants infringes, or is claimed to infringe, the aforesaid Letters Patent.

3. That a preliminary injunction may be granted herein restraining plaintiff during the pendency of this action as in paragraph 2 aforesaid.

27 4. That these defendants have such other and further relief as, upon hearing, the facts may justify and to the Court may seem meet.

U. S. Dairies Sales Corp.,
Purity Pack Corp.,
Milk Container Equipment Corp.,
Maurice J. Brasile,
Eugene Blum,

By Wilkinson, Huxley, Byron, Hume,
Defrees, Fiske, O'Brien & Thomson,
Their Attorneys.

Howard W. Clement,
Richard E. Voland,
Of Counsel.

Wilkinson, Huxley, Byron & Hume,
38 South Dearborn Street,
Chicago 3, Illinois,
RAndolph 6-4848.

Defrees, Fiske, O'Brien & Thomson,
105 South La Salle Street,
Chicago 3, Illinois,
FRanklin 2-4000.

28 Schedule "A".

List of United States and Foreign Patents and Publications.

U. S. Patent No., Patentee and Issue Date—

1,381,442, Thompson, June 14, 1921
1,553,385, Kohr, Sept. 15, 1925
1,613,248, Searing, Jan. 4, 1927
2,254,833, Ashkenaz, Sept. 2, 1941
2,392,054, McKinnis, Jan. 1, 1946
2,396,527, Osborne, Mar. 12, 1946
2,462,019, Bowman, Feb. 15, 1949
2,515,363, Warren, July 18, 1950

29 Schedule "B".

List of Prior Users, Prior Inventors or Persons Having Prior Knowledge.

Person, Place and Remarks—

Emery Thompson, New Rochelle, N. Y., see Pat. #1, 381,442
William Kohr, Johnstown, Pa., see Pat. #1,553,385
John F. Searing, New Rochelle, N. Y., see Pat. #1,613,248
David M. Ashkenaz, Philadelphia, Pa., see Pat. #2,254,833
Ronald B. McKinnis, Winter Haven, Fla., see Pat. #2,392,054
Fred H. Osborne, Snyder, N. Y., see Pat. #2,396,527
Wade W. Bowman, New York, New York, see Pat. #2,462,019
Charles J. Warren, Los Angeles, Calif., see Pat. #2,515,363

* * * * *

58 And afterwards on, to wit, the 27th day of September, 1954 came the Plaintiff by its attorneys and filed in the Clerk's office of said Court its certain Second Amended Complaint in words and figures following to wit:

59 IN THE UNITED STATES DISTRICT COURT.
* * (Caption—54-C-277) * *

SECOND AMENDED COMPLAINT.

(1) Plaintiff, The Mojonnier Dawson Company, is an Illinois corporation, with its principal office and place of business at 9151 Fullerton Avenue, Franklin Park, Illinois.

(2) Defendant, U. S. Dairies Sales Corporation, is an Illinois corporation doing business at and having a principal place of business at 326 W. Jackson Street, Woodstock, Illinois.

(3) Defendant, Purity Pack Corporation, is an Illinois corporation doing business at and having a principal place of business at 643 McHenry Avenue, Woodstock, Illinois.

60 (4) Defendant, Milk Container Equipment Corporation, is an Illinois corporation doing business at and having a principal place of business at 643 McHenry Avenue, Woodstock, Illinois.

(5) Defendant, U. S. Filler Equipment, Inc., is an Illinois corporation doing business at and having a principal place of business at 333 Lake Street, Woodstock, Illinois, and 725 Lake Avenue, Woodstock, Illinois.

(6) Defendant, U. S. Carton Forming Corporation, is an Illinois corporation doing business at and having a principal place of business at 723-25 W. Lake Street, Woodstock, Illinois.

(7) Defendant, Paper Pack Corporation, is an Illinois corporation doing business at and having a principal place of business at 69 W. Washington Street, Room 805, Chicago 2, Illinois.

(8) Defendant, Pack Equipment Corporation, is an Illinois corporation doing business at and having a principal place of business at 69 W. Washington Street, Room 805, Chicago 2, Illinois.

(9) Defendants, Maurice J. Brasile, Eugene Blum and Albert A. Lewis are residents and inhabitants of the Northern District of Illinois, Eastern Division, respectively residing at 331 Johnson Avenue, Woodstock, Illinois, 902 Bunker Street, Woodstock, Illinois, and 291 Marshman, Highland Park, Illinois.

(10) This is an action arising under the patent laws of the United States, and for unfair competition in trade, and jurisdiction of this Court is based on Title 28, Section 1338 of the United States Code.

Count I.

(11) On February 2, 1954, United States Letters Patent No. 2,667,990 were duly and legally issued to plaintiff for an invention of Albert B. Mojonnier, entitled Dis-
61 pensing Mechanism With Time Controlled Flow, and on May 18, 1954 said Letters Patent No. 2,667,990 were duly and legally reissued to plaintiff as Reissue Patent No. 23,830, and said Letters Patent No. 2,667,990 were surrendered, and plaintiff ever since has been and now is the sole owner and holder of said Reissue Letters Patent and of all rights of recovery thereunder.

(12) Plaintiff has for many years last past manufactured and sold carton filling apparatus embodying the inventions of said Letters Patent.

(13) The corporate defendants have, on information and belief, subsequent to the date of issuance of said Letters Patent, jointly and severally infringed said Letters Patent within this District and elsewhere within the United States by either manufacturing or selling filling apparatus embodying the inventions described in said Letters Patent, which infringing apparatus is substantially copied from plaintiff's apparatus, and said individual defendants, acting in the capacity of incorporators and officers of some or all of said corporate defendants, have infringed said Letters Patent and contributed to said infringement in directing the activities of some or all of said corporate defendants, and said infringement by said defendants has been deliberate and wilful and without the consent of plaintiff, and such infringement will continue unless defendants are enjoined by this Court.

(14) Defendants have unlawfully derived profits and gains from such infringement which plaintiff would other-

wise have received, and plaintiff has thereby been irreparably damaged, and if such infringement continues will be caused further irreparable damage.

62 Count II.

(15) Long prior to the formation of any of the corporate defendants and at least as early as 1949, plaintiff adopted and used and now uses on its said filling apparatus embodying the invention of said Letters Patent the trade-mark "Electromatic", and plaintiff, continuously since, has sold its said filling apparatus bearing said trade-mark "Electromatic" in interstate commerce throughout the United States.

(16) Long prior to the formation of any of the corporate defendants and at least as early as 1949, plaintiff adopted and used and now uses on its said filling apparatus embodying the invention of said Letters Patent the trade-mark "M-D", and plaintiff, continuously since, has sold its said filling apparatus bearing said trade-mark "M-D" in interstate commerce throughout the United States.

(17) Plaintiff's filling apparatus sold under the trade-marks "Electromatic" and "M-D" are of high quality and exceptional utility, and are well and favorably known to the trade and public as being dependable, reliable, and entitled to full public confidence, and the trade-marks "Electromatic" and "M-D", standing either alone or separately, have become the means by which said products are identified as coming from plaintiff.

(18) Plaintiff has built up and now has a valuable good will in its trade-marks "Electromatic" and "M-D".

(19) Long after the adoption and use by plaintiff of its trade-marks "Electromatic" and "M-D" for filling apparatus, and long after said trade-marks had acquired a distinctiveness with the trade and public as indicating plaintiff's filling apparatus, the corporate defendants,
63 jointly and severally, under the direction of the individual defendants, began the distribution and sale of filling apparatus substantially copied from plaintiff's filling apparatus, bearing plaintiff's trade-mark "Electromatic", and also bearing the designation "M-J".

(20) Plaintiff is informed and believes and states the fact to be that the defendants adopted and began the use of the trade-mark "Electromatic" and of the designation "M-J", as herein alleged, with full knowledge of plain-

tiff's long prior and extensive use of its trade-marks "Electromatic" and "M-D", and with full knowledge that the trade and public associate "Electromatic" and "M-D", when applied to or used in connection with filling apparatus, with plaintiff and plaintiff's products only.

(21) Plaintiff is informed and believes and states the fact to be that defendants adopted and began the use of the designation "M-J", as herein alleged, with full knowledge of the fact that plaintiff is and for a long time past has been referred to in the trade by the abbreviations "MOJ" and "MJ", which abbreviations are taken from the word "Mojonnier".

(22) Plaintiff is informed and believes and states the fact to be that the aforesaid use by defendants of plaintiff's trade-mark "Electromatic" and of the designation "M-J" is deliberate and is for the purpose of giving defendants' products a salability which they otherwise would not have.

(23) The aforesaid use by the defendants of "Electromatic" and "M-J", as herein alleged, infringes plaintiff's common law rights in its trade-marks "Electromatic" and "M-D".

(24) The use by defendants of the designation "M-J" as herein alleged, constitutes unfair competition with plaintiff in that it is calculated to and is likely to and does result in confusion and passing off among the trade and
64 public of defendants' filling apparatus as being products of plaintiff or of a concern connected with plaintiff, and does mislead the trade into believing that defendants are a branch or dealer of plaintiff, or are in some way connected with plaintiff.

(25) Defendants' use of plaintiff's trade-mark "Electromatic" and of the designation "M-J" is without the consent of plaintiff.

(26) Plaintiff has requested the defendants to discontinue their use of its trade-marde "Electromatic" and the designation "M-J", but defendants have refused to comply with said request and continue unlawfully to use said trade-mark and said designation.

(27) The use by the defendants of plaintiff's trademark "Electromatic" and of the designation "M-J" is damaging to the plaintiff and will continue to damage the plaintiff unless restrained by this Court.

Count III.

(28) Plaintiff hereby incorporates, by reference, each and every allegation contained in paragraphs (1) to (14), inclusive, of plaintiff's Amended Complaint herein.

(29) That on or about December 29, 1951, plaintiff entered into a contract in writing with John A. Polivka and Maurice J. Brasile (said Polivka and Brasile being referred to in said contract as "purchasers", said Brasile being one of the defendants herein, and said plaintiff being referred to in said contract as "seller"), under which contract plaintiff agreed to manufacture a specified type of filler machine embodying the invention of plaintiff's application for patent Serial No. 85,278, which resulted in 65 United States Letters Patent No. 2,667,990, granted February 2, 1954, and reissued as patent number Re. 23,830, granted May 19, 1954; that until on or about July 7, 1953, plaintiff manufactured said filler machine in substantial numbers and sold said filler machines to the said "purchasers" or their order; that said filler machines were sold or leased to the dairy trade in divers ways under the management and control of said defendant Maurice J. Brasile and other defendants herein; that at all times since June 24, 1953, there was due plaintiff from the defendants herein, jointly or individually, a sum in excess of $60,000.00 for said filler machines made by plaintiff and sold to said defendants for their use and benefit, jointly or individually, all in breach of said contract; that on or about July 1, 1953, plaintiff notified the principal defendants herein that said contract of December 29, 1951, would be terminated by July 6, 1953, unless said amount due plaintiff was paid in full; that thereafter on, to-wit, July 7, 1953, plaintiff sent its notice of termination to defendants, terminating said contract, which notice was received by defendants on, to-wit, July 13, 1953, and thereupon said contract dated December 29, 1951, was terminated; that for a period long prior to the termination of said contract on July 13, 1953, a confidential relationship existed between plaintiff and defendants Maurice J. Brasile, Eugene Blum, Albert A. Lewis, U. S. Filler Equipment, Inc., U. S. Carton Forming Corporation, Paper Pack Corporation, and Pack Equipment Corporation, and also between plaintiff and defendants Maurice J. Brasile and Eugene Blum, as principals of the later incorporated defendants, U. S. Dairies Sales Corporation, Purity Pack Corporation, and Milk Con-

tainer Equipment Corporation, under the circumstances of
which confidential relationship plaintiff made freely
66 and fully available to said individual defendants and
to said corporate defendants, their officers, servicemen and salesmen, plaintiff's factory and all details concerning the manufacture, use and servicing of plaintiff's said filler machine, and trained said defendants' servicemen and salesmen in the details of plaintiff's said filler machine, and under said confidential relationship plaintiff disclosed and released to said servicemen, salesmen, agents, principals and officials of said defendants, confidential and detailed information concerning plaintiff's development, research and manufacture of said filler machine; that said defendants, by their principals, agents and servants, and particularly by defendant, Maurice J. Brasile, did in the early part of 1953 construct and build a filler machine in the nature of a pilot model, at Woodstock, Illinois, and while said contract dated December 29, 1951, was still in force and effect said defendant, Maurice J. Brasile, individually and in concert with other defendants herein did demonstrate said Brasile filler machine to jobbers, and did offer to produce said filler machine in large quantities and to sell said filler machine to jobbers, all in competition with plaintiff, without authorization of plaintiff and in violation of said contract dated December 29, 1951, and said Brasile filler machine so built and offered by said defendants was substantially copied from plaintiff's said filler machine and embodied plaintiff's invention which was the subject of said contract dated December 29, 1951; and said individual defendants, Maurice J. Brasile, Eugene Blum, and Albert A. Lewis, individually and in concert with said corporate defendants, U. S. Dairies Sales Corporation, Purity Pack Corporation, Milk Container Equipment Corporation, U. S. Filler Equipment, Inc., U. S. Carton Forming Corporation, Paper Pack Corporation, and Pack Equipment Corporation, by their officers, agents and
67 servants, advised jobbers and dairies that their new
filler machine, copied from plaintiff's filler machine as herein recited, would be available by June or July, 1953, all in unfair competition with plaintiff, in bad faith, in violation of said contract, in violation of the confidential relationship under said contract, and in violation of plaintiff's patent rights under said contract; that on or about June 30, 1953, by an instrument in writing, defendant Maurice J. Brasile sold and assigned to Pack Equipment

Corporation, one of the defendants in this cause, his invention in a semiautomatic and automatic filler for containers; that on information and belief plaintiff alleges the fact to be that the "Filler" recited in said instrument is the Brasile pilot filler machine above recited in this paragraph; and plaintiff further alleges that defendants, jointly or individually, and conspiring with each other by and through their officers, agents and servants, secretly and surreptitiously constructed said Brasile filler machine embodying the said invention of plaintiff's filler machine, and secretly and surreptitiously demonstrated said filler machine to various jobbers who had theretofore purchased plaintiff's filler machine, and offered for sale to said jobbers filler machines to be manufactured in accordance with said Brasile pilot filler machine model or one similar thereto, and admonished said jobbers from disclosing to plaintiff that defendants or any of them had made, constructed, demonstrated or offered for sale, a filler machine in competition with plaintiff's filler machine; that defendants, jointly or severally, by their officers, agents or servants, promised delivery on said Brasile filler machine, or one similar thereto, to be manufactured by defendants, or one of them, by June or July, 1953, all of which was during the time said contract dated December 29, 1951,
68 was in full force and effect, and without knowledge or consent of plaintiff; and plaintiff further says that by reason of said fraudulent concealment of defendants' said pilot model filler machine from plaintiff, and defendants' concealment of its negotiations with various jobbers in offering for sale a filler machine embodying the invention of plaintiff's filler machine, without consent or authorization of plaintiff and in unfair competition with plaintiff, and by reason of said fraudulent acts and fraudulent conduct of defendants said contract of December 29, 1951, was vitiated, and the acts of defendants in continuing to manufacture, use, sell and lease, and offer to sell and lease, filler machines of the design and construction copied from plaintiff's filler machine, and embodying the invention of plaintiff's filler machine is in aggravation of the infringement herein alleged by plaintiff, is unequitable, and is irreparably damaging to plaintiff, and defendants and each of them have acted in bad faith.

(30) That defendants, U. S. Dairies Sales Corporation, Purity Pack Corporation and Milk Container Equipment Corporation, individually and jointly, in concert with de-

fendants, Maurice J. Brasile, Eugene Blum, Albert A. Lewis, U. S. Filler Equipment, Inc., U. S. Carton Forming Corporation, Paper Pack Corporation, and Pack Equipment Corporation, or any of the last mentioned defendants, have committed the acts of infringement and unfair competition alleged in plaintiff's Amended Complaint, and further as alleged in paragraph (28) of this Second Amended Complaint, fraudulently and in bad faith, in violation of the contractual relationship with plaintiff prior to July 13, 1953, and in consequence thereof said defendants are in this Honorable Court with unclean hands, and counterclaim should be dismissed.

69 (31) That defendants, Maurice J. Brasile and Albert A. Lewis, jointly or severally, are the alter ego of defendants, U. S. Dairies Sales Corporation, Purity Pack Corporation, Milk Container Equipment Corporation, U. S. Filler Equipment, Inc., U. S. Carton Forming Corporation, Paper Pack Corporation, and Pack Equipment Corporation, and that as such they have jointly or severally dominated and controlled said corporate defendants in all wrongful acts alleged by plaintiff, and that said defendants, Maurice J. Basile and Albert A. Lewis, jointly or severally, are the principals and primarily responsible and liable for the wrongful acts of said corporate defendants herein alleged by plaintiff.

Wherefore Plaintiff Prays:

1. That the defendants, their agents, servants, employees, privies, successors and assigns, be at first during the pendency of this action and afterwards perpetually enjoined and restrained from:

(a) Further infringement of said Letters Patent.

(b) Using the word "Electromatic" or the designation "M-J", or any reproduction, counterfeit, copy or colorable imitation thereof, as a brand name or trademark for filling apparatus.

(c) Using the name "Electromatic" and the designation "M-J" in any manner whatsoever in connection with the manufacture, sale, or offering for sale of filling apparatus.

(d) Doing any act or thing calculated to induce the belief that the defendants or their merchandise are in any way connected with plaintiff or its products.

70 2. That defendants be required to account to plaintiff for all damages suffered by plaintiff by reason of the patent infringement; and all profits realized by

defendants and damages suffered by plaintiff by reason of the trade-mark infringement and unfair competition herein complained of.

3. That in view of the aggravated infringement defendants be required to pay to plaintiff treble damages.

4. That the costs of this action and reasonable attorneys' fees be assessed against defendants.

5. That plaintiff may have such other and further relief as the equities may require and as may to this Court seem meet and just.

The Mojonnier Dawson Company,
By McCanna & Morsbach,
John F. McCanna,
Attorneys for Plaintiff,
Room 2300,
20 North Wacker Drive,
Chicago 6, Illinois.

71 This Second Amended Complaint is filed pursuant to oral motion by plaintiff's counsel at the hearing had September 21, 1954.

Copies of this paper are being sent by first class mail this 27th day of September, 1954, to:

Wilkinson, Huxley, Byron & Hume
38 South Dearborn Street
Chicago 3, Illinois

Defrees, Fiske, O'Brien & Thomson
105 South La Salle Street
Chicago 3, Illinois

Louis Bernat
135 South La Salle Street
Chicago 3, Illinois

Samuel W. Kipnis
Kegan & Kipnis
105 West Monroe Street
Chicago 3, Illinois

Eli E. Fink
Fink & Miller
105 West Adams Street
Chicago 3, Illinois

attorneys for the respective defendants.

John F. McCanna

72 And afterwards on, to wit, the 18th day of October, 1954 came the Defendants, U. S. Dairies Sales Corporation et al., by their attorneys and filed in the Clerk's office of said Court their certain Answer To Second Amended Complaint and Counterclaim of Said Defendants, in words and figures following, to wit:

73 IN THE UNITED STATES DISTRICT COURT.

* * (Caption—54-C-277) * *

ANSWERS OF DEFENDANTS U. S. DAIRIES CORPORATION, PURITY PACK CORPORATION, MILK CONTAINER EQUIPMENT CORPORATION, MAURICE BRASILE and EUGENE BLUM TO SECOND AMENDED COMPLAINT and COUNTERCLAIM OF SAID DEFENDANTS.

Answer.

For answer to the Second Amended Complaint herein, the defendants U. S. Dairies Sales Corporation, Purity Pack Corporation, Milk Container Equipment Corporation, Maurice Brasile and Eugene Blum, by their attorneys, Wilkinson, Huxley, Byron & Hume and Defrees, Fiske, O'Brien & Thomson, say:

(1-4) These defendants deny that U. S. Dairies Sales Corporation is doing business at and has its principal place of business at 326 West Jackson Street, Wood-
74 stock, Illinois, and aver that the address of said corporate defendant is 643 McHenry Avenue, Woodstock, Illinois; these defendants admit the remaining allegations contained in Paragraphs (1), (2), (3) and (4) of said Second Amended Complaint.

(5) These defendants admit that U. S. Filler Equipment, Inc., is an Illinois corporation, and deny each and every one of the other allegations contained in Paragraph (5) of said Second Amended Complaint.

(6-8) These defendants have no knowledge or information sufficient to form a belief as to the truth of the allegations contained in Paragraphs (6), (7) and (8) of said Second Amended Complaint and so neither admit nor deny said allegations, and leave plaintiff to full, strict, and adequate proof thereof.

(9) These defendants have no knowledge sufficient to form a belief as to the truth of the allegations contained in Paragraph (9) of said Second Amended Complaint, concerning the defendant Albert A. Lewis, and so neither admit nor deny said allegations, and leave plaintiff to full, strict and adequate proof thereof. These defendants admit the other allegations contained in said Paragraph (9).

(10) These defendants admit, with respect to Count I of the Second Amended Complaint, that it purports to state an action arising under the patent laws of the United States, and that jurisdiction of this court relative to Count I is based on Title 28, Section 1338(a) of the United
75 States Code; these defendants deny, however, that this Court has jurisdiction of Count III, based on Title 28, Section 1338(b).

As To Count I.

(11) These defendants admit that United States Letters Patent No. 2,667,990 were issued on February 2, 1954 to Albert B. Mojonnier, as the inventor and applicant therefor, and to the Mojonnier Dawson Co. as the assignee, but deny that said Letters Patent were duly and legally issued. These defendants admit that said Letters Patent No. 2,667,990 were reissued as Reissue Patent No. 23,830, but deny that said Reissue Patent was duly and legally issued. These defendants have no knowledge of the other allegations contained in Paragraph (11) of the Second Amended Complaint, and therefore deny the same, and leave plaintiff to full, strict and adequate proof thereof.

(12) These defendants admit that plaintiff has manufactured and sold carton filling appartus but are without knowledge and information sufficient to form a belief with respect to the other allegations contained in Paragraph (12) of said Second Amended Complaint and therefore deny the same and leave plaintiff to full, strict and adequate proof thereof.

(13) These defendants deny each and every allegation contained in Paragraph (13) of said Second Amended Complaint.

(14) These defendants deny each and every allegation contained in Paragraph (14) of said Second Amended Complaint.

76 As To Count III.

(28) Answering Paragraph 28 of Count III of the Second Amended Complaint, these defendants hereby incorporate by reference each and every answer contained in Paragraphs (1) to (14), inclusive, of this Answer.

(29) Answering Paragraph 29 of Count III of the Second Amended Complaint, these defendants:

(a) Aver that a copy of the contract dated December 29, 1951 referred to in this Paragraph and relating to the manufacture of filling machines by plaintiff, is now of record in this case, a copy thereof having been filed with the Court, together with a stipulation by counsel for both plaintiff and these defendants as to its authenticity; and that such contract speaks for itself as to what was agreed thereby between the parties thereto.

(b) Deny that said filler machines were sold to John A. Polivka and Maurice J. Brasile "or their order" until on or about July 7, 1953 or at any other time.

(c) Admit that the filler machines manufactured by plaintiff were sold to the dairy trade but deny that said sales were "in divers ways under the management and control of said defendant Maurice J. Brasile and other defendants herein"; and aver that these corporate defendants were not in existence at the times referred to in said Paragraph 29.

(d) These defendants deny that at all times since June 24, 1953 there was due plaintiff from these defendants, jointly or individually, a man in excess of $60,000 for said filler machines made by plaintiff or any other sum whatever, and they aver that none of said filler machines was ever sold to them or any of them.

77 (e) These defendants aver that they are without information sufficient to form a belief as to the allegation that on or about July 1, 1953, plaintiff notified the "principal defendants" herein that said contract of December 29, 1951 would be terminated by July 6, 1953 unless said amount due plaintiff was paid in full.

(f) These defendants deny that thereafter plaintiff sent its notice of termination to these defendants, terminating said contract and deny that said notice was received by these defendants on July 13, 1953 or at any other time, but aver that a letter signed by Albert B. Mojonnier as President of Mojonnier Dawson Company, dated July 7, 1953, was received on or about July 13, 1953 by Pre-

formed Carton Corporation, Box 390, La Grange, Illinois, and that such letter contained a notation indicating that carbon copies thereof had been forwarded to U. S. Filler Equipment Corporation and U. S. Carton Forming Corporation; and further aver that these defendants are without information sufficient to form a belief as to the alleged termination of said contract.

(g) These defendants deny that for a period long prior to the alleged termination of said contract on July 13, 1953, a confidential relationship existed between plaintiff and defendants Maurice J. Brasile, Eugene Blum, Albert A. Lewis, U. S. Filler Equipment Inc., U. S. Carton Forming Corporation, Paper Pack Corporation and Pack Equipment Corporation and also deny that such a confidential relationship existed between plaintiff and defendants Maurice J. Brasile and Eugene Blum as principals of the later incorporated defendants U. S. Dairies Sales Corporation, Purity Pack Corporation and Milk Container Equipment Corporation.

78 (h) These defendants admit that information concerning the structure, operation and servicing of filler machines manufactured by plaintiff was given to the individual defendant Maurice J. Brasile and to one or more of the corporate defendants in existence prior to July 13, 1953, their employees and agents, but deny that such information was given in confidence and furthermore aver that such information could not have been confidential since it was at that time of public knowledge.

(i) These defendants deny that Maurice J. Brasile did, in the early part of 1953, construct and build a filler machine in the nature of a pilot model at Woodstock, Illinois, but aver that said Maurice J. Brasile did undertake to develop a sealing mechanism capable of being incorporated in a filler machine in an attempt to remedy the defects in the filler machines manufactured by plaintiff, and further aver that such development work was undertaken by said Maurice J. Brasile at his own expense and on his own time and not as agent or servant of any of the corporate defendants in existence at that time.

(j) These defendants deny that while said contract dated December 29, 1951, was still in force and effect, said defendant Maurice J. Brasile, individually or in concert with other defendants herein, did demonstrate to jobbers a filler machine other than that manufactured by plaintiff, and further deny that said Maurice J. Basile

did offer to produce a filler machine in large quantities or to sell such a machine to jobbers.

(k) These defendants deny that the sealing mechanism so developed by said Brasile was substantially copied from plaintiff's filler machine and that it embodied plaintiff's alleged invention, which was the subject of said con-
79 tract dated December 29, 1951.

(l) These defendants deny that said individual defendants Maurice J. Brasile, Eugene Blum and Albert A. Lewis, individually or in concert with said corporate defendants U. S. Dairies Sales Corporation, Purity Pack Corporation, Milk Container Equipment Corporation, U. S. Carton Forming Corporation, Paper Pack Corporation and Pack Equipment Corporation, by their officers, agents and servants, advised jobbers and dairies that they had a new filler machine which would be available by June or July, 1953.

(m) These defendants admit that on or about June 30, 1953, by an instrument in writing, defendant Maurice J. Basile sold and assigned to Pack Equipment Corporation, one of the defendants in this cause, an invention in a semi-automatic filler for containers, but aver that said invention did not incorporate either the same sealing mechanism previously referred to above or the alleged invention which was the subject of said contract dated December 29, 1951, but was a separate development; and these defendants further aver that on or about August 31, 1953 said Maurice J. Brasile gave written notice to said Pack Equipment Corporation that said assignment was rescinded by him and was wholly null and void.

(n) These defendants deny that while said contract dated December 29, 1951 was still in force and effect the defendants herein or any of them did construct, demonstrate or offer for sale any filler machine whatever other than that manufactured by plaintiff; and they specifically deny that any filler machine embodying the alleged invention of plaintiff's filler machine was at any time constructed by the defendants herein, jointly or individually, in conspiracy with each other, or by and through their
80 officers, agents and servants, or otherwise, and these defendants further specifically deny that such a filler machine was at any time secretly and surreptitiously or otherwise demonstrated to various jobbers who had theretofore purchased plaintiff's filler machine.

(o) These defendants deny that any of the defendants

herein admonished said jobbers from disclosing to plaintiff that defendants or any of them had made, constructed, demonstrated, or offered for sale a filler machine in competition with plaintiff's filler machine.

(p) These defendants deny that defendants herein, jointly or severally, by their officers, agents or servants promised delivery on a Brasile filler machine to be manufactured by defendants or one of them, by June or July, 1953.

(q) These defendants deny that while said contract dated December 29, 1951 was in full force and effect the defendants herein or any of them concealed from plaintiff or constructed a pilot model filler machine or concealed from plaintiff, or made, any offers to sell any filler machine other than that manufactured by plaintiff; they specifically deny that the defendants herein or any of them did at any time construct or offer to sell a filler machine embodying the alleged invention of plaintiff's filler machine. These defendants further deny that it was by reason of any acts or conduct of defendants herein that said contract was vitiated, if it was vitiated.

(r) These defendants deny that defendants are continuing to manufacture, use, sell and lease or offer to sell and lease filler machines of a design and construction copied from plaintiff's filler machine and embodying the invention of plaintiff's filler machines, and further deny that any acts of defendants are in aggravation of any
81 infringement or are unequitable or irreparably damaging to plaintiff, and further deny that the defendants and each of them have acted in bad faith.

(30) Answering Paragraph (30) of Count III of the Second Amended Complaint, these defendants deny that defendants U. S. Dairies Sales Corporation, Purity Pack Corporation, and Milk Container Equipment Corporation, individually or jointly, in concert with defendants Maurice J. Brasile, Eugene Blum, Albert A. Lewis, U. S. Filler Equipment, Inc., U. S. Carton Forming Corporation, Paper Pack Corporation and Pack Equipment Corporation, or any of the last mentioned defendants, have committed any acts of infringement and unfair competition and further deny that these defendants are in this Honorable Court with unclean hands.

(31) Answering Paragraph (31) of Count III of the Second Amended Complaint, these defendants deny that

defendants Maurice J. Brasile and Albert A. Lewis, jointly or severally, are the alter ego of defendants U. S. Dairies Sales Corporations Purity Pack Corporation, Milk Container Equipment Corporation, U. S. Filler Equipment, Inc., U. S. Carton Forming Corporation, Paper Pack Corporation, and Pack Equipment Corporation, and that as such they have jointly or severally dominated and controlled said corporate defendants in any wrongful acts and further deny that said defendants Maurice J. Brasile and Albert A. Lewis, jointly or severally, are the principals and primarily responsible and liable for any wrongful acts of said corporate defendants herein alleged.

82 Affirmative Defenses.

Count I.

(32) Further answering the allegations of the Second Amended Complaint, defendants aver that said Patent No. 2,667,990 originally alleged to be infringed, and said Reissue Patent No. 23,839, now alleged to be infringed, are both invalid for the following reasons:

(a) Albert B. Mojonnier was not the original and first inventor or discoverer of any material or substantial part of the subject matter of said patent, or said reissue patent.

(b) Said Mojonnier was not the sole inventor or discoverer of the subject matter of said patent or said reissue patent, because, on information and belief, one Julius A. Zinn, Jr., of 520 North Michigan Avenue, Chicago 11, Illinois, was a joint inventor or joint discoverer of the subject matter thereof.

(c) Because the subject matter of said patent and said reissue patent, prior to the supposed invention or discovery thereof by the said Mojonnier, was patented or described in printed publication, as specified in the attached list marked "Schedule A—List of United States and Foreign Patents and Publications".

(d) The subject matter of said patent and said reissue patent, more than one year prior to the application for said patent by said Mojonnier, had been patented or described in patents or printed publications as specified in said Schedule A.

(e) The subject matter of said patent and said reissue

patent, more than one year prior to the application
83 for said Letters Patent by said Mojonnier, was in public use or on sale in the United States by the persons and at the places set forth in the attached list marked "Schedule B—List of Prior Users, Prior Inventors or Persons Having Prior Knowledge".

(f) The subject matter of said patent and said reissue patent prior to the alleged invention or discovery thereof by said Mojonnier, was invented or was well known or used in the United States by the persons and at the places set forth in said Schedule B.

(g) The State of the art at the time of the alleged invention of the subject matter of said patent and said reissue patent was such that in view thereof, the production of said subject matter required no more than the normal skill expected of persons engaged in the art to which said alleged invention relates.

(h) The alleged invention of said patent and said reissue patent is not described or shown in said patent or said reissue patent in such full, clear concise and exact terms as to enable anyone skilled in the art to practice the alleged invention.

(i) Said Patent No. 2,667,990 and said Reissue Patent No. 23,830 do not particularly point out or distinctly claim the alleged invention.

(j) The description of the alleged invention, as set forth in said patent and said reissue patent, is inaccurate or misleading, or is insufficient to form a basis for the claims of said patent or said reissue patent or any of them.

84 (33) Further answering the allegations of said Second Amended Complaint, defendants aver:

(a) That the state of the art at the time of the alleged invention of the subject matter of said Patent No. 2,667,990 and said Reissue Patent No. 23,830 was such, and

(b) That the proceedings in the United States Patent office which resulted in the issuance of said letters Patent No. 2,667,990 and said Reissue Patent No. 23,830 were such and

(c) That the disclosure in said Letters Patent No. 2,667,990 and said Reissue Patent No. 23,830, is so limited: that the claims in said Letters Patent and said Reissue Patent, when properly construed in view thereof, fail to include any subject matter used by the defendants subse-

quent to the issuance of said Letters Patent No, 2,667,990 and said Reissue Patent No. 23,830.

(34) Further answering the allegations of said Second Amended Complaint, these defendants aver that plaintiff is estopped by the proceedings in the United States Patent Office in the matter of the application for said Letters Patent No. 2,667,990 and in the matter of the application for said Reissue Patent No. 23,830, and by the acquiescence by the plaintiff in and to the rulings and rejections of the commissioner of Patents in the negotiations for the issuance of said Letters Patent and said Reissue Patent, and by the limitations imposed by the Patent Office during said negotiations, from claiming that its alleged invention has a scope, or that its patent is capable of any interpretation, such that any devices
85 manufactured by defendants are comprehended thereby or embraced therein.

(35) Further answering the allegations of said Second Amended Complaint, these defendants aver that said Reissue Patent No. 23,830, alleged to be infringed, and each claim thereof, is invalid and void, and that there being no statutory foundation for such action, said Reissue Patent was wrongfully issued by the United States Patent Office, in that the alleged deficiency and insufficiency of the specification of said Letters Patent No. 2,667,990 resulting in the alleged failure to fully and adequately claim the invention, within the meaning of Revised Statute 4916 (35 U. S. C., 1946 ed., 64) did not:

(a) Make said patent wholly or partly inoperative or invalid, and

(b) Make said patent inoperative or invalid by reason of a defective specification or drawing, and

(c) Result in the patentee claiming more or less than he had a right to claim in the patent, and

(d) Arise through error without any deceptive intention.

Count II.

(36) Further answering the allegations of said Second Amended Complaint, upon information and belief these defendants aver that said plaintiff is guilty of unclean hands and should be denied relief in that said plaintiff has wrongfully and falsely placed upon its filling machines a

patent notice including the following United States patent numbers:

86

1,687,707	1,763,685	2,094,769
1,687,708	1,787,778	2,101,570
1,725,562	1,869,090	2,305,130
1,763,684	1,931,781	

knowing full well that the patents identified by said numbers in no way related to said filling machines and with the malicious and corrupt intent to deceive the public and to cause the public to believe that said filling machines were protected by said patents listed in said notice.

Count III.

(37) Further answering the allegations of said Second Amended Complaint, these defendants aver that said Reissue Patent No. 23,830 contains in addition to the identical five claims of the original Letters Patent, two newly added claims of broader scope and that plaintiff is therefore estopped to assert or to maintain said newly added claims against these defendants in view of the reliance these defendants have placed on the scope and limitations of the protection afforded by said Letters Patent No. 2,667,990 and that these defendants have acquired intervening rights with respect to these two newly added claims.

Counterclaim.

Further answering and by way of Counterclaim, these defendants, U. S. Dairies Sales Corporation, Purity Pack Corporation, Milk Container Equipment Corporation, Maurice Brasile and Eugene Blum (Counterclaim plaintiffs herein), state:

87

I.

That the jurisdiction of the Court in regard to the following Counterclaim is based on the fact that this is an action arising under the patent laws of the United States, and jurisdiction of this Court is based on Title 28, Section 1338 of the United States Code.

II.

On information and belief, that plaintiff, well knowing that said patent and said reissue patent were not valid because of the fact that Albert B. Mojonnier was not the sole inventor or discoverer of the subject matter thereof, but actually was a joint inventor or joint discoverer along with one Julius A. Zinn, Jr., of 520 North Michigan Avenue, Chicago 11, Illinois, nevertheless wilfully and illegally harassed distributors and customers of defendants by charging said distributors and customers with infringement of said patent in the sale or use of defendants' product.

III.

The plaintiff, being fully aware of the limitations expressed in said U. S. Letters Patent No. 2,667,990 and in the claims thereof, and well knowing that defendants' product did not infringe said claims and that said claims were invalid if construed broadly enough to cover the defendants' product, wilfully and illegally harassed distributors and customers of defendants by charging said distributors and customers with infringement of said patent in the sale or use of defendants' product.

88 IV.

That plaintiff exceeded the limitations of good faith in serving notice of alleged infringement of its said United States Letters Patent No. 2,667,990 in that:

(a) Prior to February 2, 1954, plaintiff, being fully aware of the fact that said United States Letters Patent had not yet issued, did wrongfully and illegally harass distributors and customers of defendants by charging said distributors and customers with infringement of said patent in the sale and use of said defendants' product, and

(b) With the intention and purpose of destroying defendants' business and eliminating defendants as competitors of plaintiff, plaintiff did by various means unnecessarily and repeatedly charge the distributors and customers of defendants with infringement of said patent in the sale and use of defendants' product.

V.

On information and belief, that plaintiff, being fully aware of the fact that no issued United States patents were in existence relating to plaintiff's filling machines, with a malicious and corrupt intent to deceive the public, did wrongfully and falsely place upon said filling machines a patent notice including the following United States patent numbers:

1,687,707	1,763,685	2,094,769
1,687,708	1,787,778	2,101,570
1,725,562	1,869,090	2,305,130
1,763,684	1,931,781	

89 thereby falsely and wrongfully representing and importing that plaintiff's filling machines were protected by said patents, when, in fact, as was well known by plaintiff, the patents identified by said numbers in no way related to said filling machines.

VI.

That by means of the wrongful acts hereinabove described, plaintiff has engaged in and is engaging in unfair competition against these defendants.

VII.

That as a direct and proximate result of the said wrongful acts of plaintiff, these defendants have been wrongfully deprived of the patronage of their customers and prospective customers and their reputation and good-will have been greatly injured, and consequently these defendants have been damaged in their business and property down to the date of the filing of this Counterclaim, in the sum of Two Hundred Thousand ($200,000.00) Dollars, and under the circumstances herein set forth these defendants are entitled to said amount as compensatory damages, and a like amount as exemplary or punitive damages, together with their costs of suit.

VIII.

That unless restrained by order of this Court, the plaintiff herein will continue its efforts to destroy the business of these defendants and eliminate these defendants as competitors, and will continue to commit the wrongful acts and to engage in the illegal course of conduct, all as
90 hereinabove described, and these defendants will thereby suffer further irreparable damage, and therefore these defendants have no plain, speedy and adequate remedy at law.

Wherefore, these defendants pray:

1. That the Second Amended Complaint herein be dismissed for want of equity, with all costs to these defendants, and that in addition, in view of the misuse by plaintiff of the aforesaid patent and the deliberate and wanton disregard of these defendants' rights herein, there be allowed by the Court to these defendants a reasonable attorneys' fee.

2. That this Court, by its writ of injunction perpetually enjoin and restrain plaintiff from continuing its unfair and illegal practices as hereinabove described, and particularly from in any manner asserting the patent in suit against any distributor, jobber or customer of these defendants, and from continuing in any manner to give notice to the actual or prospective distributors, jobbers and customers of these defendants, that the manufacture, sale or use of the product of these defendants infringes, or is claimed to infringe, the aforesaid Letters Patent.

3. That a preliminary injunction may be granted herein, restraining plaintiff during the pendency of this action as in Paragraph (2) aforesaid.

4. That these defendants have and recover of and from the plaintiff herein the sum of Two Hundred Thousand
91 ($200,000.00) Dollars as compensatory damages, and a like amount as exemplary or punitive damages.

5. That these defendants have such other and further

relief as, upon hearing, the facts may justify and to the Court may seem meet.

U. S. Dairies Sales Corporation,
Purity Pack Corporation,
Milk Container Equipment Corporation,
Maurice Brasile,
Eugene Blum,
By Howard W. Clement,
By Richard E. Voland,
Their Attorneys.

Wilkinson, Huxley, Byron & Hume,
38 South Dearborn Street,
Chicago 3, Illinois,
RAndolph 6-4848.

DeFrees, Fiske, O'Brien & Thomson,
105 South LaSalle Street,
Chicago 3, Illinois,
FRanklin 2-4000.

Wilkinson, Huxley, Byron & Hume,
DeFrees, Fiske, O'Brien & Thomson,
Of Counsel.

92 Acknowledgment of Service.

Received a copy of the within and foregoing Answer and Counterclaim this 18th day of October, 1954.

McCanna and Morsbach,
Attorneys for Plaintiff.

Louis Bernat,
Attorney for Defendants, U. S. Filler Equipment, Inc., U.S. Carton Forming Corporation, Paper Pack Corporation, Pack Equipment Corporation and Albert A. Lewis.

93 Schedule "A".

List of United States and Foreign Patents and Publications.

U. S. Patent No., Patentee and Issue Date—

313,313, Gannaway, Mar. 3, 1885.
517,127, Purvis, Mar. 27, 1894.
671,307, Clark, Apr. 2, 1901.
910,265, Baker, Jan. 19, 1909.
724,527, Waterman, Apr. 7, 1903.
1,036,778, Baker, Aug. 27, 1912.
1,381,442, Thompson, June 14, 1921.
1,425,575, Burton, Aug. 15, 1922.
1,431,307, Humphrey, Oct. 10, 1922.
1,523,607, Prael, Jan. 20, 1925.
1,531,007, Jackson, Mar. 24, 1925.
1,553,385, Kohr, Sept. 15, 1925.
1,576,001, Olden, Mar. 9, 1926.
1,613,248, Searing, Jan. 4, 1927.
1,734,277, Skolnik, Nov. 5, 1929.
2,105,778, Behr, Jan. 18, 1938.
2,222,617, Hothersal, Nov. 26, 1940.
2,254,833, Ashkenaz, Sept. 2, 1941.
2,308,960, Stevens, Jan. 19, 1943.
2,322,912, Berman, June 29, 1943.
2,334,181, Elston, Nov. 16, 1943.
2,392,054, McKinnis, Jan. 1, 1946.
2,396,527, Osborne, Mar. 12, 1946.
2,442,166, Gill, May 25, 1948.
2,445,501, Vagim, July 20, 1948.
2,462,019, Bowman, Feb. 15, 1949.
2,515,363, Warren, July 18, 1950.
2,522,677, Kelly, Sept. 19, 1950.
2,526,735, Duce, Oct. 24, 1950.
2,532,074, Poukhlovsky, Nov. 28, 1950.
2,623,766, Richard, Dec. 30, 1952.

94 Schedule "B".

List of Prior Users, Prior Inventors, or Persons Having Prior Knowledge.

Person, Place and Remarks—

Bowman Dairy Co., Chicago, Ill.
Chase Products Co., Maywood, Ill.
Boswick Laboratory, Bridgeport, Conn.
E. Gannaway, Nashville, Tenn., See Pat. 313, 313.
J. B. Purvis, Detroit, Mich., See Pat. 517,127.
C. H. Clark, Newark, N. J., See Pat., 671,307.
L. A. Baker, Elgin, Ill., See Pat. 910, 265.
I. G. Waterman, Santa Barbara, Cal., See Pat. 724,527.
L. A. Baker, Elgin, Ill., See Pat. 1,036,778.
E. Thompson, New Rochelle, N. Y., See Pat. 1,381,442.
C. O. Burton, Duluth, Minn., See Pat. 1,425,575.
A. Humphrey, Glenlyon, Pa., See Pat. 1,431,307.
F. W. Prael, Portland, Ore., See Pat. 1,523,607.
W. Kohr, Johnstown, Pa., See Pat. 1,553,385.
F. H. Olden, Chester, Pa., See Pat. 1,576,001.
J. F. Searing, New Rochelle, N. Y., See Pat. 1,613,248.
M. Skolnik, Minneapolis, Minn., See Pat. 1,734,277.
H. C. A. Behr, York, Pa., See Pat. 2,105,778.
J. M. Hothersal, Brooklyn, N. Y., See Pat. 2,222,[illegible]7.
D. M. Ashkenaz, Philadelphia, Pa., See Pat. 2,254,[illegible]33.
H. D. Stevens, Akron, Ohio, See Pat. 2,308,960.
D. Berman, Brooklyn, N. Y., See Pat. 2,322,912.
R. R. Elston, Minneapolis, Minn., See Pat. 2,334,181.
R. B. McKinnis, Winter Haven, Fla., See Pat. 2,392,054.
F. H. Osborne, Snyder, N. Y., See Pat. 2,396,527.
F. A. Gill, Chicago, Ill., See Pat., 2,442,166.
E. J. Vagim, Fresno, Cal., See Pat. 2,445,501.
W. W. Bowman, New York, N. Y., See Pat. 2,462,019.
C. J. Warren, Los Angeles, Cal., See Pat. 2,515,363.
D. A. Kelly, Milwaukee, Wis., See Pat. 2,522,677.
R. E. Duce, Kokomo, Ind., See Pat. 2,526,735.

95 And afterwards on, to wit, the 8th day of November, 1954 came the Plaintiff by its attorneys and filed in the Clerk's office of said Court its certain Answer To Counterclaim Of U. S. Dairies Sales Corporation, et al., To Second Amended Complaint in words and figures following, to wit:

96 IN THE UNITED STATES DISTRICT COURT.

* * (Caption—54-C-277) * *

PLAINTIFF'S ANSWER TO COUNTERCLAIM OF U.S. DAIRIES SALES CORPORATION, PURITY PACK CORPORATION, MILK CONTAINER EQUIPMENT CORPORATION, MAURICE BRASILE AND EUGENE BLUM TO SECOND AMENDED COMPLAINT.

Answer to Counterclaim.

Plaintiff, The Mojonnier Dawson Company (counterclaim defendant herein), for answer to the counterclaim of defendants U. S. Dairies Sales Corporation, Purity Pack Corporation, Milk Container Equipment Corporation, Maurice Brasile and Eugene Blum, filed October 18, 1954, to the second amended complaint, by its attorneys, Mc. Canna & Morsbach, says:

1. Plaintiff admits the jurisdiction alleged in paragraph I of said counterclaim.

2. Plaintiff denies each and every allegation of paragraph II of said counterclaim.

97 3. Plaintiff denies each and every allegation of paragraph III of said counterclaim.

4. Plaintiff denies each and every allegation of paragraph IV of said counterclaim.

5. Plaintiff denies each and every allegation of paragraph V of said counterclaim.

6. Plaintiff denies each and every allegation of paragraph VI of said counterclaim.

7. Plaintiff denies each and every allegation of paragraph VII of said counterclaim.

8. Plaintiff denies each and every allegation of paragraph VIII of said counterclaim.

9. Plaintiff denies that it has in any way committed any wrongful acts or engaged in any illegal course of conduct alleged by said defendants, and denies that said de-

fendants or any of them are entitled to the relief prayed for in said counterclaim, or any relief whatsoever against plaintiff by way of injunction or otherwise, or to any attorneys' fees, or to any sum for alleged damages or for any matter whatsoever, or to any other and further relief whatsoever prayed for by said defendants in their said counterclaim.

The Mojonnier Dawson Company
By McCanna & Morsbach,
John F. McCanna,
Attorneys for Plaintiff,
Room 2300,
20 North Wacker Drive,
Chicago 6, Illinois,
Telephone FInancial 6-1677.

98 Notice of Service.

A copy of the foregoing "Answer to Counterclaim" was mailed by first class mail on November 8, 1954, to each of the following attorneys for the defendants:

Wilkinson, Huxley, Byron & Hume,
38 South Dearborn Street,
Chicago 3, Illinois.

DeFrees, Fiske, O'Brien & Thomson,
105 South LaSalle Street,
Chicago 3, Illinois,

Louis Bernat,
135 South LaSalle Street,
Chicago 3, Illinois.

John F. McCanna.

99 And afterwards on, to wit, the 10th day of December, 1954 came the Defendants, U. S. Filler Equipment, Inc., et al., by their attorneys and filed in the Clerk's office of said Court their certain Answer to Second Amended Complaint, in words and figures following, to wit:

100 IN THE UNITED STATES DISTRICT COURT.

* * (Caption—54-C-277) * *

ANSWER OF DEFENDANTS U. S. FILLER EQUIPMENT, INC., U. S. CARTON FORMING CORPORATION, PAPER PACK CORPORATION, PACK EQUIPMENT CORPORATION AND ALBERT A. LEWIS TO SECOND AMENDED COMPLAINT.

For their answer to the Second Amended Complaint herein, the defendants U. S. Filler Equipment, Inc., U. S. Carton Forming Corporation, Paper Pack Corporation, Pack Equipment Corporation and Albert A. Lewis (sometimes hereinafter referred to as the Lewis Group), by Louis Bernat, their attorney, state:

(1-10) They deny that U. S. Dairies Sales Corporation is doing business at and has its principal place of business at 326 West Jackson Street, Woodstock, Illinois, and are without knowledge or information sufficient to form a belief as to the truth of the allegation that defendants Maurice J. Brasile and Eugene Blum are residents and inhabitants of the Northern District of Illinois, Eastern Division, and that they reside respectively at 331 Johnson Avenue, Woodstock, Illinois and 902 Bunker Street Woodstock, Illinois; deny that the defendant U. S. Filler Equipment Inc., is doing business at and has a
101 principal place of business at 333 Lake Street, Woodstock, Illinois and 725 Lake Avenue, Woodstock, Illinois; deny that this court has jurisdiction of the claims for relief set forth in Counts II and III, and admit that the claim for relief set forth in Count I purports to be an action arising under the patent laws of the United States.

(11) Further answering Count I, these defendants admit that on February 2, 1954 United States Patent No. 2,667,990 were issued to Albert B. Mojonnier and were, on May 18, 1954, re-issued to plaintiff as re-issue Patent

No. 23,830; deny that said Letters Patent No. 2,667,990 were duly and legally issued and deny that said re-issue patent No. 23,830 were duly and legally issued, and allege that they have no knowledge or information sufficient to form a belief as to the truth of the allegation that plaintiff ever since has been and now is the sole owner and holder of said re-issue Letters Patent and of all rights of recovery thereunder.

(12) These defendants admit that plaintiff has manufactured and sold carton filling apparatus but are without knowledge or information sufficient to form a belief as to the truth of the remaining allegations of paragraph (12) of the Second Amended Complaint.

(13) These defendants deny each and every allegation contained in paragraph (13) of the Second Amended Complaint.

(14) These defendants deny each and every allegation contained in paragraph (14) of the Second Amended Complaint.

Count III.

(28) These defendants incorporate, by reference, each and every allegation contained in paragraphs (1) to (14) of this Answer.

102 (29) These defendants deny every allegation of paragraph (29) of the Second Amended Complaint save that they admit that on or about December 29, 1951 plaintiff entered into a contract, in writing, with one John A. Polivka and Maurice J. Brasile, a copy of which is now of record in this case; admit that the filler machines manufactured by plaintiff were sold to the dairy trade; admit that information concerning the structure, operation and servicing of filling machines manufactured by plaintiff was given to the defendant Maurice J. Brasile and to some of the corporate defendants in existence prior to July 13, 1953, their employees and agents; admit that on or about June 30, 1953, by an instrument in writing, the defendant Maurice J. Brasile sold and assigned to the defendant Pack Equipment Corporation an invention in a semi-automatic filler for containers.

(30) These defendants deny each and every allegation of paragraph (30) of the Second Amended Complaint.

(31) These defendants deny every allegation of paragraph (31) of the Second Amended Complaint.

Affirmative Defenses.

(32) These defendants allege that the original patent in suit No. 2,667,990 and re-issue letters patent No. 23,830, are each invalid and void for the following reasons:

A. Because the patentee Albert B. Mojonnier was not the first, original and sole discoverer of any material or substantially part of the subject matter of said original patent or re-issue patent.

103 B. Because the alleged improvement or invention described and claimed in the original patent and re-issue patent set out in the Second Amended Complaint does not amount to invention within the meaning of the patent law but, on the contrary, these defendants allege that in view of what was known in the art to which said patents relate at the time of said alleged invention or improvement, the production of the dispensing mechanism with time controlled flow described and claimed in said original Letters Patent and in said re-issue patent involved only the exercise of the ordinary skill of a person familiar with the art to which these patents relate, and, therefore, these defendants aver that said alleged invention or improvement is wholly lacking in patentable novelty and that said patent is therefore, void.

C. Because the alleged invention purported to be described and claimed by the original patent and re-issue patent set out in the Second Amended Complaint, and all material and substantial parts thereof, have been described and published in the patents and printed publications set forth in the following patents and printed publications.

Patent No., Patentee and Date
585,264, Fehrney, June 29, 1897
1,011,184, Godfrey, et al., Dec. 12, 1911
1,149,256, Godfrey, Aug. 10, 1915
1,306,890, Godfrey, June 17, 1919
1,381,442, Thompson, June 14, 1921
1,531,007, Jackson, Mar. 24, 1925
1,553,385, Kohr, Sept. 15, 1925
1,591,799, Tinapp, July 6, 1926
1,613,248, Searing, Jan. 4, 1927
104 2,030,951, Winton, Feb. 18, 1936
2,081,651, Tamminga, et al., May 25, 1937
2,147,366, Fagan, et al., Feb. 14, 1939
2,164,530, Larsen, July 4, 1939

2,174,514, Hothersall, Oct. 3, 1939
2,177,818, Bagby, Oct. 31, 1939.
2,181,729, Harris, et al., Nov. 28, 1939
2,185,191, Gray, et al., Jan. 2, 1940
2,196,299, Glunz, Apr. 9, 1940
2,204,131, Glunz, June 11, 1940
2,254,833, Ashkenaz, Sept. 2, 1941
2,280,826, Hothersall, Apr. 28, 1942
2,290,879, Hothersall, July 28, 1942
2,308,969, Stevens, Jan. 19, 1943
2,319,075, McKinnis, May 11, 1943
2,329,954, Stewart, et al., Sept. 21, 1943
2,330,726, McKinnis, Sept. 28, 1943
2,353,519, Spurr, July 11, 1944
2,357,013, McKinnis, Aug. 29, 1944
2,361,641, McKinnis, Oct. 31, 1944
2,377,796, McKinnis, June 5, 1945
2,389,268, McKinnis, Nov. 20, 1945
2,390,443, McKinnis, Dec. 4, 1945
2,392,054, McKinnis, Jan. 1, 1946
2,396,527, Osborne, Mar. 12, 1946
2,402,036, Giger, July 11, 1946
2,405,232, Nordquist, Aug. 6, 1946
105 2,420,642, Almgren, May 20, 1947
2,421,708, McKinnis, June 3, 1947
2,462,019, Bowman, Feb. 15, 1949
2,472,389, Von Stoeser, June 7, 1949
2,515,363, Warren, July 18, 1950
2,546,205, Zimmerman, Mar. 27, 1951
2,561,922, Hall, July 24, 1951
2,570,267, Nordquist, Oct. 9, 1951
2,583,106, Kayat, Jan. 22, 1952
2,633,282, Tamminga, et al., Mar. 31, 1953
2,634,757, Houghton, Apr. 14, 1953
2,650,012, Kummer, et al., Aug. 25, 1953
2,664,237, Sanford, Dec. 19, 1953

Each of the above listed patents and printed publications was granted, filed or published prior to the date of the alleged invention by Albert B. Majonnier or more than one year before the effective date of his application for the patent in suit.

L. Because every material and substantial part of said original letters patent and re-issue letters patent therein claimed as new was invented if there be any pat-

entable invention therein or known and used in this country by others prior to the alleged invention thereof by said Albert B. Mojonnier, to wit, the patentees of the United States Letters Patent hereinabove listed in this Answer at the respective addresses given in said patents and elsewhere in the United States.

E. Because the alleged invention purported to be patented in said Letters Patent was on sale in the United States for more than one year prior to the effective date of filing of the application for said Letters Patent by certain persons and corporations and by the patentees and their assignees of the Letters Patent of the United
106 States, hereinabove listed in this Answer, and at the addresses given therein and elsewhere in the United States.

F. Because, in view of the state of the art at the date of the alleged invention thereof by the said Albert B. Mojonnier no invention was required to produce the alleged dispensing mechanism with time controlled flow purported to be covered by the claims of said original patent and said re-issue patent, as shown by the patents hereinabove set forth, and by what was common knowledge on the part of those skilled in the art prior to the date of the alleged invention.

G. Because the alleged invention of said patent and said re-issue patent is not described or shown in said original patent or in said re-issue patent in such full, clear, concise and exact terms as to enable anyone skilled in the art to practice the alleged invention.

H. Because the said original Letters Patent and re-issue patent were issued by the United States Patent Office without due investigation, and as shown by the records and contents of the file wrapper of the said application for said original Letters Patent and re-issue patent, important parts of the relevant prior art hereinabove set forth were overlooked.

I. Because the alleged inventor in the application for said original Letters Patent and re-issue patent failed to particularly point out and specifically and distinctly claim the part or parts of his alleged invention which were new and distinguishable from what was old, and failed to confine the claims specifically to the alleged improvements and otherwise to define the alleged invention as required by the patent laws.

J. Because the description of the alleged invention, as set forth in said patent and said re-issue patent, is inaccurate or misleading or is insufficient to form a basis for the claims of said patent or said re-issue patent.

K. Because the alleged inventor of said patent and re-issue patent failed to describe any new and useful improvements or anything which was not already within the public domain and commonly known to persons skilled in the art at the date of the alleged invention.

L. Because the claims of said patent and re-issue patent were broader than the alleged invention of said Albert B. Mojonnier.

(33) These defendants further answering allege that they are informed and believe, and and therefore state the fact to be, that said patent and re-issue patent 23,830, by reason of limitations introduced during the prosecution of said patents, are so limited and confined that the claims thereof cannot be interpreted to cover any devices which any of the defendants herein made, used or sold, and because of the state of the prior art the claims of said patent and said re-issue patent are so limited and confined that they cannot be interpreted to cover any device which any of these defendants made, used or sold.

(34) These defendants allege that if the claims of said patent or said re-issue patent are so broadly construed as to cover any machine which any of these defendants made, used or sold then they read equally well upon the prior art and are therefore invalid and void.

(35) These defendants deny that the defendants Pack Equipment Corporation or Paper Pack Corporation at any time manufactured, used or sold any milk filling machine of any type; allege that none of the Lewis Group defendants has, at any time, manufactured any milk filler machine,
108 and that none of them owns stock or has any financial interest in the defendants U. S. Dairies Sales Corporation, Purity Pack Corporation or Milk Container Equipment Corporation, or any of them (hereinafter referred to as the Brasile Corporate defendants); allege that none of the Lewis Group defendants was ever, at any time, financially interested in the Brasile Corporate de-

fendants, or owned any shares of stock in said Brasile Corporate defendants; allege that none of the Lewis Group defendants has, at any time, since the issuance of the original patent in suit, directly or indirectly, in any manner whatsoever, participated in the management or operation of the business of the Brasile Corporate defendants or financed their operation in any way, and deny that they, or any of them, has at any time infringed upon said original Letters Patent No. 2,667,990 or upon the re-issue thereof No. 23,830.

(36) Further answering the Second Amended Complaint herein, these defendants allege that the plaintiff is guilty of unclean hands in that the plaintiff has misused the patent in suit to maliciously injure the business of some of these defendants of selling milk cartons; that the plaintiff, well knowing that some of these defendants are in the business of selling pre-fabricated milk cartons, has represented and is representing to customers of said Lewis Group defendants, and prospective customers of said Lewis Group defendants, that the Lewis Group defendants have infringed the patents in suit and have participated in the alleged infringement therein by the Brasile Corporate defendants for the purpose and with the intention of inducing such customers and prospective customers to discontinue doing business with the Lewis Group defendants, or some of them, and diverting such business to the plaintiff and other competitors of the Lewis Group defendants, or some of them, who sponsor or encourage the use of milk filling machines manufactured and sold by the
109 plaintiff, and as a result of the plaintiff's representations as above alleged, some of such customers have cancelled orders for pre-formed milk cartons previously given to the Lewis Group defendants, or some of them, and have refused to purchase such cartons from them, assigning as their reason for so doing the fact that the plaintiff has made the representations above alleged and has also asserted that the Lewis Group defendants are financially irresponsible and unable to carry out any contracts they may enter into.

(37) Further answering the allegations of said Second Amended Complaint, these defendants aver that said re-

issue patent No. 23,830, and each and every claim thereof, is invalid and void for the reason that said re-issue patent was wrongfully issued by the United States Patent Office in that the alleged deficiency and insufficiency of the specification of the original Letters Patent No. 2,667,990, resulting in the alleged failure to adequately claim the alleged invention, did not make said patent wholly or partly inoperative or invalid; did not make said patent inoperative or invalid by reason of a defective specification or drawing; did not result in the patentee claiming more or less than he had a right to claim in the patent and did not arise through error without any deceptive intention.

(38) Further answering the allegations of the Second Amended Complaint, these defendants allege that the plaintiff is guilty of unclean hands and is not entitled to any relief for the reason that the plaintiff has represented and is representing to the public that its dispensing mechanism with time controlled flow, alleged to have been manufactured in accordance with the teaching of the patent or re-issue patent in suit, is covered by the following United States Letters Patent:

110	1,687,707	1,787,778	2,161,570
	1,687,708	1,869,090	2,305,130
	1,725,562	1,931,781	
	1,763,684	2,094,769	

that the plaintiff at the time it made such representations at all times knew that none of the above-mentioned patents covered its said machine and in no way related thereto; and knew such representations to be false; that the plaintiff, well knowing such statements to be false, made the same with the intention of deceiving the public into believing that its said machines were covered by said patents, and for the purpose of suppressing competition with the plaintiff and for the further purpose of intimidating the purchasing public into refraining from using or buying filling machines made or sold by competitors on pain of a suit for the infringement of said patents.

Wherefore, plaintiff is not entitled to the relief prayed for or to any relief and these defendants pray that they may be hence dismissed and that this Court award to these

defendants their costs and attorney's fees in this suit and such other or further relief as to the Court may seem proper.

U. S. Filler Equipment, Inc.
U. S. Carton Forming Corporation
Paper Pack Corporation
Pack Equipment Corporation and
Albert A. Lewis
By Louis Bernat
Their Attorney
135 South LaSalle Street
Chicago 3, Illinois

111 A copy of the above and foregoing Answer was mailed on December 10, 1954, to:

Mr. John F. McCanna
McCanna & Morsbach
Suit 2300
20 North Wacker Drive
Chicago 6, Illinois,
Attorney for Plaintiff,

and to Richard E. Voland
105 South LaSalle Street
Chicago 3, Illinois

Wilkinson, Huxley, Byron & Hume
38 South Dearborn Street
Chicago 6, Illinois
Attorneys for certain defendants.

Louis Bernat.

112 And afterwards on, to wit, the 25th day of February, 1955 came the Defendants, U. S. Filler Equipment, Inc., et al., by their attorneys and filed in the Clerk's office of said Court their certain Notice Pursuant To Title 35, United States Code, Section 282 in words and figures, to wit:

113 IN THE UNITED STATES DISTRICT COURT.

* * (Caption—54-C-277) * *

NOTICE PURSUANT TO TITLE 35 UNITED STATES CODE, SECTION 282.

Now come the defendants U. S. Filler Equipment, Inc., U. S. Carton Forming Corporation, Paper Pack Corporation, Pack Equipment Corporation and Albert A. Lewis, and give notice to the plaintiff herein as follows:

1. At the trial of the above action these defendants will rely upon the following Letters Patent as anticipations of Reissue Letters Patent No. 23,830, in addition to the patent pleaded in their answer:

Country, Patent No., Date and Patentee—

U. S., 668,303, Feb. 19, 1901, Beyer.
U. S., 1,166,607, Jan. 4, 1916, LaPorte.
U. S., 1,639,679, Aug. 23, 1927, Zsoldos.
U. S., 1,665,060, Apr. 3, 1928, Hitchcock.
U. S., 1,978,002, Oct. 23, 1934, Weaver.
U. S., 2,546,879, Mar. 27, 1951, Wegman.

2. At the trial of the above action the above-identified defendants will rely upon following persons as being of prior inventors and having prior knowledge of the
114 subject matter of Reissue Letter Patent No. 23,830 in suit in addition to those already pleaded in the answer: the patentees and their assignees listed in the above-identified patents at the addresses given in said patents.

3. At the trial of the above action the above-identified defendants will rely upon the following instances of public use and sales in the United States for more than one year prior to the effective filing date of Reissue Letters Patent No. 23,830 in suit by the patentees and their assignees of the Letters Patent of the United States listed in paragraph

l hereof and at the addresses given therein and elsewhere in the United States in addition to those already pleaded in the answer.

Louis Bernat
Attorney for Defendants U. S. Filler Equipment, Inc., U. S. Carton Forming Corporation, Paper Pack Corporation, Pack Equipment Corporation and Albert A. Lewis
135 South LaSalle Street
Chicago, Illinois

115 State of Illinois } ss.
County of Cook }

Helen C. Hycz, being duly sworn on oath, states that a copy of the attached Notice Pursuant to Title 35 United States Code, Section 282 was mailed by regular mail on February 25, 1955, to plaintiff's attorney:

Mr. John F. McCanna
20 North Wacker Drive
Chicago 6, Illinois,

and to the attorneys for the other defendants, namely:

Mr. Richard E. Voland
Defrees, Fiske, O'Brien & Thompson
105 South LaSalle Street
Chicago, Illinois, and

Wilkinson, Huxley, Byron & Hume
38 South Dearborn Street
Chicago 6, Illinois

And further deponent sayeth not.

Helen C. Hycz

Subscribed and sworn to before me this 25th day of February, 1955.

Evelyn Martin,
Notary Public.

116 And afterwards on, to wit, the 28th day of February, 1955 came the Defendants, U. S. Dairies Sales Corporation, et al., by their attorneys and filed in Clerk's office of said Court their certain Notice Pursuant to Title 35, U. S. Code, Section 282, in words and figures following, to wit:

117 IN THE UNITED STATES DISTRICT COURT.

* * (Caption—54-C-277) * *

NOTICE PURSUANT TO TITLE 35 U. S. CODE, SECTION 282.

To: John F. McCanna,
20 North Wacker Drive,
Chicago 6, Illinois.
Attorney for Plaintiff

Pursuant to Title 35 U. S. Code, Section 282, notice is hereby given on behalf of the defendants, U. S. Dairies Sales Corporation, Purity Pack Corporation, Milk Container Equipment Corporation, Maurice Brasile, and Eugene Blum, in the above-entitled cause tnat defendants at the trial of said cause, in addition to the Letters Patent and patentees listed in Schedule A of said defendants' answer, will also rely upon the following U. S. Letters Patent as anticipation of the patent in suit or as showing the state of the art:

118

Patent Number	Date Granted	Patentee
1,639,679	August 23, 1927	Julius Zsoldos

U. S. Dairies Sales Corporation,
Purity Pack Corporation,
Milk Container Equipment Corporation,
Maurice Brasile,
Eugene Blum,

By Howard W. Clement,
Howard W. Clement,
38 South Dearborn Street,
Chicago 3, Illinois,
RAndolph 6-4848,
Attorney for Defendants.

119 I Hereby Certify that two copies of the foregoing notice were sent to attorneys for plaintiff on February 24, 1955, by depositing them in the United States mails at Chicago, Illinois, in an envelope addressed to said attorneys, with postage fully prepaid.

/s/ Howard W. Clement,
Howard W. Clement.

120 And afterwards, to wit, on the 25th day of March, 1955, being one of the days of the regular March term of said Court, in the record of proceedings thereof, in said entitled cause, before the Honorable John P. Barnes, District Judge (appears the following entry, to wit:

121 IN THE UNITED STATES DISTRICT COURT.
* * (Caption—54-C-277) * *

On motion of Brasile Group defendants by their counsel it is

Ordered that the issues relating respectively to Counts I and III shall be heard separately and in that sequence.

122 And afterwards on, to wit, the 11th day of April, 1955 came the Parties by their attorneys and filed in the Clerk's office of said Court their certain Stipulation in words and figures following, to wit:

123 IN THE UNITED STATES DISTRICT COURT.
* * (Caption—54-C-277) * *

STIPULATION.

It Is Hereby Stipulated by and between the parties listed below, through their respective counsel, this Honorable Court consenting:

1. That the plaintiff will rely at the trial on Claims 1, 6 and 7 of the patent in suit as being infringed.

2. That the structure alleged to be an infringement of the claims specified in Paragraph 1 hereof is that incorporated in the machine bearing Serial No. MJ SA 3028 being made and sold by the Brasile defendants at the time of filing of this law suit, and the machine now being made and sold by the Brasile defendants.

3. That defendants will furnish copies of any existing

drawings in their custody and control showing the construction of the machines referred to in Paragraph 2 hereof and will allow plaintiff to inspect same at a convenient location.

124 4. Defendants will furnish copies of any existing drawings in their custody and control showing the construction of the so-called "Excello Machine", identified in the action pending in the Superior Court of Cook County, Case No. ..... between the plaintiff and some of the defendants.

5. Uncertified copies of United States patents may be used in evidence subject to the usual verification.

6. Original documents, records and other evidentiary material will be produced in evidence at the trial with the right of subsequent substitution of photostatic copies for originals.

7. Each side will utilize only one expert witness with respect to the consideration of prior art patents and accused structures.

8. Defendants will provide plaintiff with a list of the prior art patents upon which they will rely (in addition to those cited by the Patent Office) as at present advised on or before Monday, March 21, 1955.

9. Defendants will provide plaintiff with a list of the instances of public use upon which they will rely as at present advised on or before Monday, March 21, 1955.

10. Defendants will provide plaintiff with a list of the instances of public sale upon which they will rely as at present advised on or before Monday, March 21, 1955.

125 McCanna & Morsbach,
By John McCanna,
Room 2300, 20 North Wacker Drive, Chicago,
Attorneys for Plaintiff.

Defrees, Fiske, O'Brien & Thomson,
105 South LaSalle, Chicago,
By Richard E. Voland,
Wilkinson, Huxley, Byron & Hume,
38 South Dearborn, Chicago,
By Howard W. Clement,
Attorneys for Brasile Group Defendants.

Louis Bernat,
135 South LaSalle, Chicago,
Attorney for Lewis Group Defendants.

126 And on the same day, to wit, the 11th day of April, 1955 came the Defendants U. S. Dairies Sales Corporation, et al., by their attorneys and filed in the Clerk's office of said Court their certain Notice Pursuant to Title 35, U. S. Code, Section 282 in words and figures following, to wit:

127 IN THE UNITED STATES DISTRICT COURT.

* * (Caption—54-C-277) * *

NOTICE PURSUANT TO TITLE 35
U. S. CODE, SECTION 282.

To: John F. McCanna
20 North Wacker Drive
Chicago 6, Illinois
Attorneys for Plaintiff

Pursuant to Title 35 U. S. Code, Section 282, notice is hereby given on behalf of the defendants, U. S. Dairies Sales Corporation, Purity Pack Corporation, Milk Container Equipment Corporation, Maurice Brasile, and Eugene Blum, in the above-entitled cause that defendants at the trial of said cause, in addition to the Letters Patent and patentees listed in Schedule A of said defendants' answer, will also rely upon the following U. S. Letters Patent as anticipation of the patent in suit or as showing the state of the art:

Patent No., Date Granted and Patentee—

190,911, May 15, 1877, Scowden.
649,936, May 22, 1900, Kann.
668,303, February 19, 1901, Beyer.
711,069, October 14, 1902, Newman.
1,201,970, October 17, 1916, Johnson.
1,553,385, September 15, 1925, Kohr.
1,639,679, August 23, 1927, Zsoldos.
2,030,951, February 18, 1936, Winton.
2,147,366, February 14, 1939, Fagan.
2,171,757, September 5, 1939, Lippold.
2,222,617, November 26, 1940, Hothersall, et al.
2,254,833, September 2, 1941, Ashkenaz.
2,290,879, July 28, 1942, Greibach.
2,349,780, May 23, 1944, Weinreich.

2,353,519, July 11, 1944, Surr.
2,396,527, March 12, 1946, Osborne.
2,499,149, February 28, 1950, Lippold.
2,542,239, February 20, 1951, Engles.
2,633,959, April 7, 1953, VonStoeser.
2,682,984, July 6, 1954, Melikian.

and the following publication:

"A Treatise on Hydraulics," Hector J. Hughes and Arthur I. Safford, Rev'd 1926, The McMillan Co. (1926) N. Y.

In addition to the prior users, prior inventors or persons having prior knowledge, listed in Schedule B of said defendants' answer, defendants will also rely upon the following prior users, prior inventors or persons having prior knowledge:

129	Person	Place
	Golden State Company Ltd.	425 Battery Street, San Francisco, California
	Page Milk Company	1623 Saw Mill Run Blvd. Pittsburgh, Pennsylvania
	Julius Zimm	420 North Michigan Ave. Chicago, Illinois.

U. S. Dairies Sales Corporation,
Purity Pack Corporation,
Milk Container Equipment Corporation,
Maurice Brasile,
Eugene Blum,
By Howard W. Clement,
Howard W. Clement,
38 South Dearborn Street,
Chicago 3, Illinois,
RAndolph 6-4848,
Attorney for Refendants.

I hereby certify that two copies of the foregoing notice were sent to attorneys for plaintiff on April 1, 1955, by depositing them in the United States mails at Chicago, Illinois, in an envelope addressed to said attorneys, with postage fully prepaid.

Howard W. Clement.

130 And on the same day, to wit, the 11th day of April, 1955 came the Defendants, U. S. Dairies Sales Corporation et al., by their attorneys and filed in the Clerk's office of said Court their certain Notice in words and figures following, to wit:

131 IN THE UNITED STATES DISTRICT COURT.

* * (Caption—54-C-277) * *

NOTICE.

To: John F. McCanna
20 North Wacker Drive, Suite 1930
Chicago, Illinois
Attorney for Plaintiff

In accordance with the stipulation previously executed on March 16, 1955 by counsel, the defendants listed below hereby notify plaintiff that:

(1) They will, as at present advised, rely on the following prior art patents in addition to those cited by the Patent Office during the prosecution of the patent and reissue patent in suit:

668,303	Beyer
1,166,607	La Porte
2,546,879	Wegman
1,639,679	Zsoldos
2,663,282	Tamminga
2,542,239	Engels
517,127	Purvis
2,442,166	Gill
2,030,951	Winton
2,164,530	Larsen
2,290,893	Hothersall

132 (2) They will, as at present advised, rely on the public use made by the following parties:

(a) Albert B. Mojonnier, 9151 Fullerton Avenue, Franklin Park, Illinois;

(b) The Mojonnier Dawson Company, 9151 Fullerton Avenue, Franklin Park, Illinois;

(c) The Bowman Dairy Company, Chicago, Illinois.

(3) They will, as at present advised, rely on the public sale made by the aforementioned Mojonnier Dawson Company to Bowman Dairy Company, Chicago, Illinois.

U. S. Dairies Sales Corporation
Purity Pack Corporation
Milk Container Equipment Corporation
Maurice Brasile
Eugene Blum

By Howard W. Clement
Attorney for Defendants
38 South Dearborn Street
Chicago 3, Illinois

HWC.gj
March 21, 1955

Service of this Notice acknowledged this 21st day of March, 1955.

John F. McCanna
Attorney for Plaintiff.

* * * * *

135 And afterwards on, to wit, the 20th day of April, 1955 came the Defendants, U. S. Dairies Sales Corporation et al., by their attorneys and filed in the Clerk's office of said Court their certain Notice in words and figures following, to wit:

136 In the United States District Court.
* * (Caption—54-C-277) * *

NOTICE.

To: John F. McCanna
20 North Wacker Drive
Suite 1930
Chicago, Illinois
Attorney for Plaintiff

In accordance with the stipulation previously executed on March 15, 1955 by counsel, the defendants listed below hereby notify plaintiff that they will, as at present advised,

rely on the following prior art patents, in addition to those cited by the Patent Office during the prosecution of the patent and reissue patent in suit:

517,127	Purvis
668,303	Beyer
711,069	Newman
1,166,607	La Porte
1,639,679	Zsoldos
2,030,951	Winton
2,147,366	Fagan
2,164,530	Larsen
2,171,757	Lippold
2,222,617	Hothersall
2,542,239	Engels
2,682,984	Melikian

137 This notice supersedes the notice previously given on March 21, 1955, with respect to the prior art patents to be relied upon.

U. S. Dairies Sales Corporation
Purity Pack Corporation
Milk Container Equipment Corporation
Maurice Brasile
Eugene Blum

By Howard W. Clement
Attorney for Defendants
38 South Dearborn Street
Chicago, Illinois

HWC:gj
Chicago, Illinois
April 14, 1955

Certificate of Service.

A copy of the foregoing Notice has been served on John F. McCanna, heretofore named, by mailing a copy of said Notice by regular mail, postage prepaid, to his address, above noted, on the 14th day of April, 1955.

Howard W. Clement

138 And afterwards on, to wit, the 28th day of April, 1955 came the U. S. Filler Equipment, Inc., et al., by their attorneys and filed in the Clerk's office of said Court their certain Notice in words and figures following, to wit:

139 IN THE UNITED STATES DISTRICT COURT.

* * (Caption—54-C-277) * *

NOTICE.

To: John F. McCanna
Suite 2300
20 North Wacker Drive
Chicago, Illinois
Attorney for Plaintiff

In accordance with the stipulation previously executed on March 15, 1955 by counsel, the defendants listed below hereby notify plaintiff that they will, as at present advised, rely on the following prior art patents, in addition to those cited by the Patent Office during the prosecution of the patent and reissue patent in suit:

517,127	Purvis
668,303	Beyer
711,069	Newman
1,166,607	LaPorte
1,639,679	Zsoldos
2,030,951	Winton
2,147,366	Fagan
2,164,530	Larsen
2,171,757	Lippold
2,222,617	Hothersall
140 2,542,239	Engels
2,682,984	Melikian

This notice supercedes all notices previously given by these defendants with respect to the prior art patents to be relied upon.

U. S. Filler Equipment, Inc.
U. S. Carton Forming Corporation
Paper Pack Corporation
Pack Equipment Corporation and
Albert A. Lewis
By Louis Bernat
Attorney for Defendants
135 South LaSalle Street
Chicago 3, Illinois

Certificate of Service.

A copy of the foregoing Notice has been served on John F. McCanna, heretofore named, by mailing a copy of said Notice by regular mail, postage prepaid, to his address, above noted, on the 22nd day of April, 1955.

Louis Bernat

141 And afterwards on, to wit, the 17th day of May, 1955 came the Plaintiff by its attorneys and filed in the Clerk's office of said Court its certain Motion to Amend Second Amended Complaint in words and figures following, to wit:

142 IN THE UNITED STATES DISTRICT COURT.

* * (Caption—54-C-277) * *

MOTION TO AMEND SECOND AMENDED COMPLAINT.

Now comes The Mojonnier Dæyson Company, plaintiff herein, and moves this Honorable Court for leave to amend the Second Amended Complaint, as follows:

(14-A) Plaintiff has extensively manufactured and sold "Dispensing Mechanism With Time Controlled Flow" in accordance with the claims of said Letters Patent No. 2,667,990 and said Reissue Patent No. 23,830, and is prepared to supply the demand therefor. Plaintiff has been to large expense and has exerted great effort in introducing said invention, which is of great advantage and value. Plaintiff's "Dispensing Mechanism With Time Controlled Flow", made in accordance with the claims of said patents has enjoyed great commercial success because of its unique and inherent merit, and because it has supplied a need long demanded, particularly in the dairy field, and which prior to said invention had not been filled.

John F. McCanna,
Attorney for Plaintiff.

Order:

Amendment approved and entered this 17th day of May, 1955.

John P. Barnes,
U. S. District Judge.

* * * * *

1 IN THE UCITED STATES DISTRICT COURT.

* * (Caption—54-c-277, 55-c-137) * *

2 TRANSCRIPT OF PROCEEDINGS.

had in the above-entitled cause before the Honorable John P. Barnes, Chief Judge of said Court, in his court room in the United States Court House at Chicago, Illinois, on Tuesday, May 17, 1955, at 2:00 o'clock P. M.

* * * * *

107 And thereupon the plaintiff, to maintain the issues on its part introduced the following evidence, to-wit:

ALBERT B. MOJONNIER, called as a witness herein on behalf of the Plaintiff, having been first duly sworn, was examined and testified as follows:

Direct Examination by Mr. McCanna.

Q. Will you please state your name, age and residence?

A. My name is Albert B. Mojonnier. I am 46 years old. I reside at 5357 North East River Road, which is in Leyden Township, Illinois. The post office is Norwood Park, Illinois.

Q. And your occupation?

A. I am president of the Mojonnier-Dawson Company.

Q. Is that the plaintiff in this action?

A. Yes, sir, it is.

Q. Is that a corporation?

108 A. Yes, sir. The Mojonnier-Dawson Company is a corporation.

Q. What state?

A. It is organized under the laws of the State of Illinois.

Q. Do you know when it was incorporated?

A. It was incorporated March 13, 1946.

109 Q. I hand you a certificate number 5055, by the Secretary of State of Illinois, and ask you whether you can identify that.

A. Yes, I can.

Q. And what is it?

A. This is the original certificate of incorporation of

the Mojonnier-Dawson Company. It is dated the 13th day of March, 1946, and it shows that it has been recorded.

By Mr. McCanna: Will the Reporter please mark this certificate Plaintiff's Exhibit No. 1 for identification?

(Thereupon said document was marked Plaintiff's Exhibit No. 1 for identification.)

By Mr. McCanna:

Q. Who were the incorporators of this company?

A. There were three incorporators of the Mojonnier-Dawson Company. I was one. The other two were Emmorette Mojonnier and Lynn S. Dawson.

Q. What was the relationship of these incorporators, if any, to each other?

A. Emmorette Mojonnier is my wife, Lynn S. Dawson is my wife's brother.

110 By Mr. McCanna: I am offering this as Plaintiff's Exhibit 1 in evidence.

By the Court: Any objection?

By Mr. Kipnis: No objection.

By the Court: It may be received.

(Said document, so offered and received in evidence, was marked PLAINTIFF'S EXHIBIT No. 1.)

By Mr. McCanna:

Q. Is this corporation, the Mojonnier-Dawson Company, now in good standing under the laws of Illinois, if you know?

A. Yes, it is in good standing.

Q. How long have you been president of Mojonnier-Dawson Company?

A. I have been president of Mojonnier-Dawson Company since the day it was formed.

Q. And who caused this company to be formed?

A. I caused it to be formed.

Q. Now state briefly the capacity in which you have served with this company and the nature of your duties.

A. I have been responsible for the direction of the affairs of the company in general and my particular
111 responsibility has been the development, design, manufacture, sales and service of products manufactured by the Mojonnier-Dawson Company.

Q. Are you the Albert B. Mojonnier who is named as assignor to the Mojonnier-Dawson Company in patent

number 2,667,990, granted February 2, 1954, entitled Dispensing Mechanism with Time Controlled Flow?

A. Yes.

By Mr. McCanna: I believe we have a stipulation, your Honor, that these soft copies may be used in lieu of the original.

I might say to save some questioning that the original patent was surrendered at the time of the reissue.

I will ask the Reporter to mark this copy as Plaintiff's Exhibit 2 for identification.

(Thereupon said document was marked Plaintiff's Exhibit No. 2 for identification.)

By Mr. McCanna: I offer it in evidence as Plaintiff's Exhibit 2.

112 By the Court: Any objection?

By Mr. Kipnis: No objection.

By the Court: It may be received.

(Said document, so offered and received in evidence, was marked PLAINTIFF'S EXHIBIT No. 2.)

By Mr. McCanna:

Q. Are you the Albert B. Mojonnier who is named as the assignor to the Mojonnier-Dawson Company, a corporation of Illinois, in reissue patent number 23,830?

A. Yes, I am.

Q. Did you petition to the Commissioner of Patents praying for reissue of this letters patent for an alleged new and useful invention for which Letters Patent number 2,667,990 were issued on February 2, 1954?

A. Yes, I did.

Q. I hand you a document and ask whether you can identify this.

A. Yes, I can.

This is the petition you have just mentioned.

By Mr. Voland: Will you please try to raise your
113 voice a little, Mr. Mojonnier, so that we can hear you over here?

By the Witness: Thank you, I will.

By Mr. McCanna:

Q. Is that the reissue patent itself?

A. Just a minute--yes, this is the reissue patent number 23,830.

By Mr. McCanna: I will ask that this be marked Plaintiff's Exhibit No. 3 for identification.

(Thereupon said document was marked Plaintiff's Exhibit No. 3 for identification.)

By Mr. McCanna: I offer this as Plaintiff's Exhibit No. 3.

By the Court: Any objection?

By Mr. Kipnis: No objection.

By the Court: It may be received.

(Said document, so offered and received in evidence, was marked PLAINTIFF'S EXHIBIT No. 3.)

By Mr. McCanna:

Q. Who is the owner of reissue patent number 23,830, if you know?

A. The owner of that patent is the Mojonnier-
114 Dawson Company by virtue of an assignment which I made of that patent to Mojonnier-Dawson Company.

Q. Is the company the sole owner, do you know?

A. The company is the sole owner of the patent.

Q. Now do you have that assignment in writing that you made to the company?

A. The original assignment?

Q. Yes.

A. No, I do not.

115 Q. Do you know where it is?

A. The original patent assignment was one of a number of documents which were stolen from the office of the Mojonnier-Dawson Company by parties unknown in February of 1952 at the time of a safe robbery, when two safes were taken bodily out of the office.

The contents of those safes were returned in part, after being picked up from Addison Creek by the Melrose Park police, but one of the documents which was not returned was the original patent assignment which was in an envelope in one of those safes.

Q. I hand you a document which is a certified copy, dated March 23, 1955, by the Commissioner of Patents, Department of Commerce, and ask whether you can identify the instrument contained therein.

A. Yes, I can. This is a certified copy of the original assignment. I can identify the photostatic copy of the original assignment which is found herein.

Q. Does that show your signature to that assignment?

A. It shows the signature of Albert B. Mojonnier. That is my signature.

By Mr. McCanna: Will the reporter mark this
116 Plaintiff's Exhibit 4 for identification?

(Thereupon said document was marked Plaintiff's Exhibit No. 4 for identification.)

By Mr. McCanna: I offer this in evidence as Plaintiff's Exhibit 4.

By The Court: Any objection?

By Mr. Kipnis: No objection.

By The Court: It may be received.

(Said document, so offered and received in evidence, was marked PLAINTIFF'S EXHIBIT NO. 4.)

By Mr. McCanna:

Q. Since March 28, 1949, that is the date of that assignment, Plaintiff's Exhibit 4, has the Mojonnier-Dawson Company made any assignment or transfer of its reissue patent, No. 23,830?

A. No, sir, it has not.

Q. Or encumbered the patent in any way?

A. It has not encumbered it in any way.

Q. Now, Mr. Mojonnier, will you state briefly the extent of your education?

A. I was educated in the public grammar schools
117 in St. Louis, Missouri. From 1921 to 1925, I attended the Soldan High School in St. Louis, Missouri. I graduated in 1925.

From 1925 to 1929 I attended the Engineering School of Washington University in St. Louis, Missouri, and I graduated in June, 1929 with the degree of Bachelor of Science in Mechanical Engineering.

Q. During the years you were in college, did you have any employment, and if so, state briefly what it was.

A. I had employment during the summers when I was both in high school and college, and the major part of that employment was as a draftsman and as a shop hand at Mojonnier Brothers Company in Chicago, Illinois.

Q. Is there any relationship between your name and Mojonnier Brothers Company?

A. Yes, there is. Mojonnier Brothers Company is a company which was formed during World War I by five brothers. My father is one of those five.

Q. State briefly what is the nature of the business of Mojonnier Brothers Company.

A. Mojonnier Brothers Company designs, manufactures

and sells specialized equipment of a wide variety for
118 the dairy, food and chemical industries.

Q. Can you tell us something briefly about the size of Mojonnier Brothers Company?

A. Well, as I have stated, Mojonnier Brothers Company started during World War I. I believe it was during 1916. They grew during the '20's. I recall that their sales first passed one million dollars in 1929. At the present time they employ about 400 people. They have three plants in and around Chicago. I am informed that their sales are in the neighborhood of seven million dollars a year.

Q. Now after you were through college, I believe you said in 1929, what did you do?

A. The day after I graduated from college I went to work full time for Mojonnier Brothers Company in Chicago.

Q. How long did you continue in the employ of that company?

A. I worked there until February 1, 1946.

Q. Tell us the nature of your duties at the beginning of your employment with Mojonnier Brothers.

A. My first job at Mojonnier Brothers Company was as a service man on the installation of vacuum type
119 filling machines made under a patent which Mojonnier Brothers Company had purchased, I believe in 1928, from the Albro Fillers and Engineering Company, Ltd., of London, England.

I spent several months on installation work. My first job was the installation of five rotary filling machines, four large ones and one small one, manufactured by Mojonnier Brothers Company under the patent I have mentioned.

I installed these in the plant of the City Dairy Company, Ltd. at Toronto, Ontario, Canada. That is now a Borden plant.

120 Q. What was the type of filling used in that British machine?

A. Those were vacuum type fillers of rotary design for the purpose of filling milk into glass milk bottles.

Q. Did you have anything to do with the manufacture of this vacuum type filling machine?

A. I did later. When I came back from Toronto after this initial installation, I was asked to go over all the items which could be improved.

I did so, and I was put in the engineering department to assist in the redesigning of that filler to make it more

nearly meet board of health requirements in the United States, and to improve its operation. I was later given charge of the assembly department where these machines were assembled.

Q. About what year was that, if you recall?

A. Well, we began the redesign of that Albro machine in the fall of 1929, and we completed it sometime in 1930.

Q. Following this, what were your duties at Mojonnier Brothers Company?

121 A. During 1930 and 1931, and on through 1933, I took an increasing amount of responsibility for the manufacture and sale and service of these rotary vacuum fillers for milk.

The company developed those in some five models, each with several variations—right hand and left hand variations, for instance—and I supervised the installation of them in many points throughout the country and was instrumental in the manufacture, sale and service of quite a few hundred of these large machines.

Q. Did you personally have anything to do with the development of these vacuum type filler machines?

A. Yes, sir, I did. I worked on the development and I made several inventions in connection with this redesign and applied for several patents in connection with this redesign.

Q. I hand you copies of patents 1,956,077; 1,992,693, and 1,966,889, and ask whether you can identify those.

A. Yes, sir, I can. These are three patents taken out in connection with the redesign of the Albro filler to make it meet United States requirements.

122 I was the sole inventor on patent number 1,956,077, covering a shutoff valve in a float tank.

I was co-inventor with Mr. Lewis E. Fagan on patent 1,966,889, covering the filler mechanism of this machine.

I was co-inventor on patent 1,992,693, which covers the part of this machine which puts the paper cap on the glass milk bottle, commonly called the capper.

By Mr. McCanna: Do counsel wish to look at these patent copies?

By Mr. Kipnis: Yes.

By Mr. McCanna: I will ask that these be marked for identification Plaintiff's Exhibit 5 being patent number 1,956,077; Plaintiff's Exhibit No. 6 being patent number 1,966,889; and Plaintiff's Exhibit No. 7 being patent number 1,992,693.

(Thereupon said documents were marked respectively Plaintiff's Exhibits 5, 6 and 7 for identification.)

By Mr. McCanna: I offer them in evidence at this 123 time, if your Honor please.

By Mr. Kipnis: No objection.

By The Court: They may be received.

(Said documents, so offered and received in evidence, were marked respectively PLAINTIFF'S EXHIBITS Nos. 5, 6 and 7.)

By Mr. McCanna:

Q. Now following this period, I believe that you said it was about 1935?

A. Yes.

Q. What did you do at Mojonnier Brothers?

A. During the period I mentioned of 1930 to 1933 or into 1934, that vacuum filler was new and somewhat revolutionary in the milk industry, but competition came in during the latter part of the period, and in 1934 I was directed by Mojonnier Brothers Company to again change this filler.

I was then put in charge of the second redesign of this machine, and the result was what we term the number series of Mojonnier vacuum fillers. There were four models, each made righthand and lefthand, all rotary type vacuum fillers for filling glass milk bottles with milk.

124 Q. In these duties were you engaged in engineering development?

A. That was part of my duties, the engineering and development, and in connection with that work during that period I applied for several other patents. I believe there were three in connection with the filler itself, and another one in connection with some other work that I did at Mojonnier Brothers Company.

Q. Do you have any record of the nature and scope of this work that you did at Mojonnier Brothers on these vacuum type fillers?

A. I have here a booklet which illustrates with photographs and describes the important types of rotary vacuum type fillers which I developed during the period I have mentioned and later, on up to the World War II period. I believe that is on the table.

Q. Did you have anything to do with the preparation of this booklet?

A. Yes, sir, I compiled that booklet in the early days of World War II for a double purpose.

One purpose was to list the availability of each of the major types of fillers which we manufactured at Mojonnier Brothers Company so that the salesmen would know
125 what they could sell and what delivery would be required and what priority was required.

The secondary purpose was to give the salesmen something that they could show the trade, to illustrate each of the various types of machines that we made, and it was used widely for the second purpose.

126 Q. I hand you a booklet and ask whether you can identify this.

A. Well, this is the booklet which I have been speaking about.

Q. Will you please tell us now more in detail concerning your duties in the development of these machines you have just been testifying about as being shown in this booklet, and I ask you to cover that briefly as to each of the different machines.

A. Well, during the '30's—I don't remember the exact date—I was made a director of Mojonnier Brothers Company and later on was made vice-president and my duties during that period became, complete charge of the department of manufacturing vacuum fillers.

The way they organized their business: each man had charge of his own department and I was in charge of sales, engineering, development, manufacture and service of anything connected with these machines.

Now, I take it you want me to describe the machines that are in this booklet, briefly?

Q. Yes. And if any of those machines went into actual use, if you know where they went into use and for
127 what purpose, I believe we would like to know that.

A. All of these illustrations in this book are of actual installations in operating plants. I compiled it intentionally that way so that it could not be interpreted as strictly a sales book but rather a book showing the performance that we had had.

The pages are numbered.

The first photograph is on page 6 and shows a Model 60 rotary Mojonnier vacuum filler for filling glass bottles with milk and applying caps thereto, having a capacity of approximately 60 quarts of milk per minute.

The photograph on page 8 is an installation at the Sanitary Farm Dairies at Houston, Texas. I made that installation myself in May of 1935. It shows a rotary

Model 90 Mojonnier vacuum filler for filling glass bottles with milk and applying paper caps thereto.

This machine had a capacity of 90 quarts of milk per minute.

Coming back to page 6, the installation here is in the Grafenburg Dairy, which, I believe, is in Utica, New York.

At least, it is in the East.

128 The next photograph shows an installation of two Model 125 rotary vacuum fillers and cappers for filling glass bottles with milk and applying caps thereto. The installation is at the Marin-Dell Dairymen's Cooperative Association at Oakland, California. This illustration is on page 10.

This type of filler had a capacity of 125 quarts of milk per minute and the types shown in the photograph would product 250 quarts of milk per minute.

On page 12 is a photograph of one corner of the Mayfair plant on the north side, of the Bowman Dairy Company and it shows two Model 155 Mojonnier vacuum fillers for filling milk. These are also rotary fillers and cappers and have a capacity of filling 155 quarts of milk per minute.

These machines had a number of special attachments, such as stainless steel shields on the outside and special panels for control of the machine by the operator at a distance from the machine. This is a show plant and is one of the outstanding installations in the country.

Now, I have mentioned only milk, so far but during the period from 1936 until World War II, because the
129 paper carton came into the market and reduced the overall sale of fillers for glass milk bottles and because competition became increasingly keen in the sale of fillers for glass milk bottles, I was directed by Mojonnier Brothers Company to apply the Mojonnier vacuum filler to the filling of any other type of liquid or container, that it could be applied to.

The balance of this booklet illustrates some of the many other applications that I made of the Mojonnier vacuum filler during this period.

On page 14 is shown a Model 60 combined filler and crowner which is installed in the Nedlog Orange Company at Chicago, Illinois. This machine fills ten ounce glass bottles with orange juice and applies a crown to them.

This is a non-carbonated drink with which many of us are familiar.

130 And there is another page attached hereto marked 14-A which shows a similar machine installed in the plant of Bireley's Beverages, Incorporated, now a division of the General Foods Company at Indianapolis, Indiana. This is one of a large number of fillers and crowners that we made for Bireley's Beverages.

This particular machine is for filling seven-ounce bottles with beverages having a 35 millimeter neck and applying 35 millimeter crowns to the products. This particular product is filled hot.

The product of the Nedlog beverage is filled cold. The preservation is by means of benzoate of soda.

The Bireley's products involve prepasteurization and are hot filled.

On page 16 is a photograph of Model 60 Mojonnier rotary filler for filling eight-ounce jars of mayonnaise. This photograph was taken in the large plant of the Kraft Cheese Company on Lake Shore Drive where a number of machines of this type are installed. I believe they 131 are still installed there.

This particular machine has a capacity on eight-ounce jars of mayonnaise, of 120 jars, filling jars with mayonnaise, sandwich spreads and similar viscous products.

On page 18 is a photograph of a combined cleaner and filler for the purpose of blowing lint out of jars and subsequently filling them with mayonnaise, salad dressing, or sandwich spreads or other viscous products.

The machine shown is a Model 90 filler, having a capacity of 90 quarts per minute, about 120 pints per minute. This particular machine was installed at the plant of the Quaker Maid Company, the manufacturing division of the Atlantic & Pacific Tea Company at Terre Haute, Indiana.

I personally supervised that installation and I am quite familiar with it.

On page 20 is another view of the same machine from the opposite side.

On page 22 is still a third view of the same machine in still another direction.

On page 24 is a picture of a Model 90 Mojonnier vacuum filler for wine. This particular installation was made 132 at the Sunny Hill Wine Company in Chicago, Illinois, and the machine is shown filling pint flasks, a rather unusual and difficult type of container to fill.

By Mr. Clement: Mr. McCanna, may I ask if these are all Mojonnier Brothers' machines?

By Mr. McCanna: They are and I am asking this witness to tell his experience on those, in the making of these machines as part of his background in this art.

By Mr. Clement: Is there much more to this book?

By Mr. McCanna: Well, I believe he might pick out some of the outstanding different products.

I would like to submit the book to you for inspection, if you care to look at it at this time.

By Mr. Clement: I would like to see it, yes.

We don't see the relevancy of it, but if there isn't much more, you can proceed.

133 By Mr. McCanna: It is relevant, I believe, your Honor, as showing the witness's experience as a background factor in connection with this invention and also connects up with other evidence which we will give in the course of ths case.

By Mr. McCanna:

Q. You will touch briefly, I believe, on some of the machines having a variety of products.

A. I will make it briefer. I was on page 24, showing a Model 90 Mojonnier vacuum filler for wine.

On page 26 is another model, Model 90 Mojonnier vacuum filler for wine.

On page 28 is an outstanding installation. This is a Model 125 vacuum filler for wine, filling a very peculiar container difficult to handle, at the Petri Wine Company in San Francisco. Practically all of the Petri wine was filled, at that time, on Mojonnier vacuum fillers and I believe it is so filled today.

On page 30 is a Model 155 vacuum wine filler installed in the Eastern Wine Company at the Bronx Terminal Market in New York City.

134 On pages 32 and 34 we have several views of the Model 90 Mojonnier filler and cleaner for filling bottles of vinegar. This particular machine was installed at the plant of the Quaker Maid Company, part of A & P, at Terre Haute, Indiana.

On pages 36, 38—36 and 38, we have two fillers for French dressing, one at the A & P and one at the Kraft Cheese Company here in Chicago, both for filling small bottles of French dressing.

On pages 40 and 42 we have pictures of Model 60

Mojonnier vacuum fillers at the Hirsch Foods Company at Louisville, Kentucky, filling brine over pickles.

On page 44 we have a picture of a Model 60 Mojonnier vacuum filler filling intravenous solutions for intravenous feeding or for saline solutions in hospitals. This particular installation is typical of a number of similar ones and is at the Baxter Laboratory at Morton Grove, Illinois.

On page 46 we show a Model 90 Mojonnier filler for pharmaceutical products. This particular machine is installed at the plant at Mason, Michigan, of Petrolager Company and is filling certain stomach ulcer remedies.

135 On pages 48 and 50 we have two Model 60 vacuum fillers for filling ketchup and chili sauce. These particular machines were installed at the Hirsch Foods Company at Louisville, Kentucky.

On pages 52 and 56 we have two pictures of different sizes of Mojonnier vacuum fillers for filling cans or bottles with baby food. These were outstanding installations in that some of them ran as high as 600 containers per minute.

One of these installations is an export job. The other is an installation at the Beech Nut Company at Canajoharie, New York.

On page 58 we have a view of Model 60 filler for sweetened condensed milk at the Golden State Company in California.

On pages 60 and 62 we have two views of Model 90 Mojonnier vacuum fillers, which were installed in the various plants of the Campbell Soup Company for putting sauce over spaghetti. They are used on Franco-American spaghetti and Franco-American macaroni. They are very high speed machines, with a capacity of 200, 250 cans per minute.

I believe that completes the booklet.

By Mr. McCanna:

136 Q. I believe you stated, Mr. Mojonnier, that all of these machines operated on the vacuum principle?

A. That is right.

Q. Now will you tell us what this principle is as used in these machines and particularly as applying to the filling of milk into glass bottles?

A. A vacuum filler works on the same principle that is used in sucking soda through a straw. Liquid is held in a tank at a level below the top of the container to be filled.

The filling head itself consists of two nozzles and a rubber gasket.

One nozzle is connected to the aforementioned liquid filler tank. The other nozzle is connected to a vacuum tank which is evacuated to a suitable vacuum by a suitable vacuum pump.

The container to be filled is pressed against the sealing gasket, thus connecting the supply tank with the vacuum tank through the container.

The liquid is sucked up from the supply tank into the containers, and foam, and later liquid, is drawn off of the container into the vacuum tank from which point it is returned to the supply tank for reuse.

137 These machines fill to a predetermined level and are suitable only for filling containers having a definite shape and a sufficient strength to be sealed against a sealing gasket.

138 By Mr. McCanna: Will the Reporter please mark this book as Plaintiff's Exhibit 8 for identification, and I would like to offer it in evidence.

(Thereupon said document was marked Plaintiff's Exhibit No. 8 for identification.)

By Mr. Clement: Defendants object, your Honor. I don't see the relevancy, your Honor. I don't think it is binding upon us.

By the Court: Is that the booklet to which the witness has been referring?

By Mr. McCanna: Yes, your Honor.

By the Court: Well, I guess it can be received. I doubt it is relevant. I doubt its materiality, but, it may be received.

(Said document, so offered and received in evidence, was marked PLAINTIFF'S EXHIBIT NO. 8.)

By Mr. McCanna:

Q. Mr. Mojonnier, I believe in telling us about these vacuum type filling machines identified in Plaintiff's
139 Exhibit 8, you mentioned about some patents that you took out.

I hand you copies of patents 2,147,366, 2,138,271, and 2,149,619 and ask whether you can identify these.

A. Yes, I can.

Q. Can you tell us briefly what relation they have, if anything, to these machines that you have just been telling about?

A. Patent 2,147,366 in which I was co-inventor with Mr. Lewis E. Fagan covers the filler part of the rotary Mojonnier vacuum filler which was an integral part of each of the machines shown in the booklet which I have just described.

Patent 2,138,271, in which I was also co-inventor with Mr. Lewis E. Fagan, covers the part of that machine which applied the paper caps to the bottles commonly called the capper.

Patent 2,149,619 on which I was the sole inventor, covers another item, a float switch, which I invented for the purpose of shutting off the flow into a surface type cooler for milk in response to a rise in the liquid level of the lower trough of said cooler, to keep it from overflow-
140 ing and to start the flow again when the cooler trough was nearly empty.

By Mr. McCanna: Would counsel care to look at these patents?

(Handing documents to counsel.)

By Mr. McCanna: Will the Reporter please mark these patent copies as Plaintiff's Exhibits 9—being patent 2,138,271.

(Thereupon said document was marked Plaintiff's Exhibit No. 9 for identification.)

By Mr. McCanna: And as Plaintiff's Exhibit 10, the patent 2,147,366.

(Thereupon said document was marked Plaintiff's Exhibit No. 10 for identification.)

By Mr. McCanna: And as Plaintiff's Exhibit 11, the patent 2,149,619.

(Thereupon said document was marked Plaintiff's Exhibit No. 11 for identification.)

By Mr. McCanna: I am offering these into evidence.

By the Court: Any objection?

141 By Mr. Kipnis: No objection.

By Mr. Clement: No objection.

By the Court: They may be received.

(Said documents, so offered and received in evidence, were marked respectively PLAINTIFF'S EXHIBITS NOS. 9, 10 and 11.)

By Mr. McCanna:

Q. Here is another patent bearing your name, number 2,309,859. Can you identify that and tell us briefly what it refers to?

A. Yes, I can. This is a patent on which I was joint inventor with Mr. Malcolm Miller. It covers what we termed the Mojonnier Brothers Company—our viscous products vacuum filler which was used for the filling of products like mayonnaise, salad dressings and sandwich spreads. It is a variation of the vacuum filling principle in that we used air injection to assist in the movement of the heavy product through the tubes of the machine.

By Mr. McCanna: Would counsel care to inspect this at this time?

(Handing document to counsel.)

By Mr. McCanna: Will the Reporter please mark
142 this as Plaintiff's Exhibit No. 12, patent 2,309,859, and I offer it into evidence.

(Thereupon said document was marked Plaintiff's Exhibit No. 12 for identification.)

By Mr. Clement: No objection.

By the Court: It may be received.

(Said document, so offered and received in evidence, was marked PLAINTIFF'S EXHIBIT NO. 12.)

By Mr. McCanna:

Q. I have here a photograph marked MD 539 and ask whether you can identify that.

A. Yes, I can.

Q. What is it? What does it show?

A. This photograph, MD 539 is a front view of a machine which I designed and had constructed at Mojonnier Brothers Company in the years just prior to World War II.

It was a combined filler, crowner and gasser and its purpose was the filling, crowning and subsequent gassing of metal containers for whipping cream.

143 I made this machine for one Charles Thoms who did business under the name of Advance Packaging Corporation, I believe it was, of New York City.

I had been told that he later either sold this machine or arranged for it to be used by the Bowman Dairy Company here in Chicago. It had a capacity of 60—no. I beg your pardon—of 30, 12-ounce cans of whipping cream per minute.

144 Q. And on what principle did that machine operate?

A. The filling was on the vacuum principle.

Q. Of the same general type to which you have testified?

A. Of the same type that I have testified to. It was made under one of these patents that I just identified owned by Mojonnier Brothers Company.

By Mr. McCanna: I wish to state, your Honor, that this particular machine has a connection with some further development work directly bearing on this invention, and I make that explanation and offer it to counsel for inspection.

Will the reporter please mark this photograph as Plaintiff's Exhibit 13 for identification?

(Thereupon said document was marked Plaintiff's Exhibit No. 13 for identification.)

By Mr. McCanna:

Q. Mr. Mojonnier, you have testified in considerable detail to the application of these Mojonnier Brothers' vacuum type fillers for filling quite a wide variety of products into containers, and you have mentioned par-
145 ticularly the filling of milk into glass bottles.

Did you have any occasion for dealing with this vacuum type filler as applied to the filling of milk into any other kind of containers?

A. During 1939 I conducted some experiments with a view to applying the Mojonnier vacuum filler to the filling of paper cartons for milk. I did this following rather detailed observation and study at the Delwood Dairy Company at Yonkers, New York, of the American Can machinery for filling their paper containers for milk.

I believe I have here on the table some data in connection with those experiments.

Q. Will you tell us briefly what was the nature of those experiments?

A. Yes. I contacted the American Can Company and had them send to the Mojonnier Brothers Company in Chicago a large number of their paper cartons for milk of a wide variety from different runs.

I set up a single vacuum filling head with an arrangement for sealing the American Can paper carton to the rubber gasket of one of the filling heads. I used an air cylinder to raise the containers against the sealing valve, the sealing gasket, to be exact, and I used a
146 variable speed centrifugal exhauster to draw the the vacuum so that I could regulate the vacuum within very close limits.

I ran numerous tests trying to fill these containers by

the vacuum principle. In general, the conclusion was that because the containers varied in size and in shape due to the different conditions that took place during their manufacture, coupled with the fact that the vacuum of the filler sucked the sides of the carton in slightly, and that amount of sucking in varied from carton to carton, produced an inaccurate fill.

The variation in fill was much greater than could be tolerated for practical conditions. The experiment was given up as a failure.

Q. Do you have any record of that research or experimenting that you did?

A. Yes, I do.

Q. I hand you a batch of papers and ask whether you can identify these and tell us briefly what they are.

A. Yes. These are the records of that experiment which I have had since that time in my personal file.

They start with a blueprint, 1-MF-12733. The date of the tracing is February 25, 1939. The date of the
147 print is February 27, 1939.

The print is entitled "Sketch of Experimental Assembly for American Can Company Paper Bottles."

It shows the lower portion of a vacuum filling head together with a special support and a special sealing gasket which I made to seal the American Can carton against this head.

The next paper is an undated report on filling American Can paper bottles, which was attached in my file to this aforementioned print, and which describes what I did and indicates that the variation in fill was too great for practical use.

I quote from it:

"On this run of 250 containers the maximum variation was found to be 130 cc. The maximum variation allowable, as stated above, is 28 cc or plus or minus 14 cc. About 40 per cent of the 250 containers was found to be outside of the limits desired."

148 Q. Do you know who prepared that report?

A. I prepared this report from my own experiments.

By Mr. Kipnis: If your Honor please, I wonder if we have to go into that in detail? The witness has testified that it was a failure. It seems to me that is enough.

By the Court: Yes. I think it is proper to give us the

setting of this patent, tell us that the vacuum method of filling was not practicable with paper containers, but we don't need to go into the details of the experiments whereby he found that.

I would think that anybody having been told that would realize that it might be true.

Mr. McCanna: I have a belief, your Honor, that the actual problem that we have in this case is somewhat related to these experiments that the witness has told about.

By the Court: It is related, but we don't need to
149 examine the whole field of knowledge in order to try a little patent suit.

By Mr. McCanna: All right, your Honor.

By the Court: Let's confine ourselves to what we hope to do in one lifetime. Let's get along.

By Mr. McCanna: Could we put this report into evidence here? I would like to put it in because I believe we would want to refer to it at some future time.

By the Court: What for?

By Mr. McCanna: May I show this to counsel at this time?

By the Court: Yes.

We will take a short recess.

(Whereupon a short recess was taken.)

By the Court: Proceed.

By Mr. McCanna: Will the Reporter please mark this print and report, which the witness has testified to, as Plaintiff's Exhibit 14, the blueprint being 14-A and the report being 14-B for identification.

150 (Thereupon said documents were marked Plaintiff's Exhibits Nos. 14-A and 14-B, respectively, for identification.)

By Mr. McCanna: Your Honor, I have just omitted this whole batch of correspondence connected with this report. I submitted it to counsel and am eliminating all the correspondence part, and I would like to introduce just the report.

By the Court: Any objection?

By Mr. Kipnis: Objection on the ground that it is irrelevant and immaterial, your Honor.

By the Court: I think that is so. You must get to this patent some day, some time. Can't we get to it pretty soon?

By Mr. McCanna: Yes. I wish to inquire about other types of fillers at this period.

By the Court: Let him tell us. He is experienced. He can tell us that you can't use the vacuum on paper cartons and you can't do this and that and something else, but let's get to it and tell us quickly.

151 By Mr. McCanna: I believe we can cover that quickly.

By the Court: And if he says it is so and nobody denies it, that will be that.

By Mr. McCanna:

Q. In your experience up to this time, did you know personally about other types of fillers, filling machines for filling milk into containers?

A. Yes, I did.

Q. Will you please tell us briefly what those types were?

A. There were two types of machines used for filling milk into paper containers. I watched their development all through the 1930's. I examined these machines in various installations and was quite thoroughly familiar with their operation and their principles.

One is the piston filling principle, which is used in connection with the various models of fillers for filling Pure-Pak paper containers. Piston fillers were also used for other types of paper containers which preceded the Pure-Pak, such as the Reed and the Seal Cone.

The piston filler works like a kid's squirt gun. You
152 draw product in from a supply into a chamber through a valve by retracting a piston in this chamber. Then you turn the valve so as to connect that cylinder to an opening to the container to be filled, push the cylinder forward, and thus discharge into the container, the carton in this case, the measured amount of product which has been drawn into the cylinder previously.

Piston fillers are used in other industries for filling heavy products but were applied by Pure-Pak for filling thin liquids.

I observed that they had the disadvantage of being somewhat large, expensive, complicated. They were hard to clean. They were easily damaged because if one would drop the valve and nick it, it would leak, and then you would get an uneven fill.

Further, the piston filler tended to squirt in filling in that its motion was controlled by a mechanism, usually a cam or an eccentric, and the flow was not always uniform.

It was well known in the trade, and it is still a fact, that

there is more foam caused by the piston filler in a
153 Pure-Pak machine than by other types of fillers. Therefore the Pure-Pak people use defoamers, which are devices for squirting a jet of steam or devices for sucking foam out of the top of the carton so as to get that foam out of the way before the carton is closed.

The other type of machine that was in use at that time and still is for filling paper cartons with milk is the displacement type of filler. That works on the same principle as the measuring cup.

Its basic principle is the same as dipping a cup into a container, filling the cup, and then pouring the cup into the carton to be filled.

The American Can Company used this type of machine, and they accomplish the filling by attaching to a central bowl a series of cups, each having a measurement of the same volume as the largest container to be filled, normally a quart.

These cups have two valves on them, one of which admits liquid from the bowl to the cup, and the other of which admits liquid from the cup to the container to be filled.

During one half of the rotation of the machine, the cup is open to the supply tank and is filled with milk. Dur-
154 ing the other half of the rotation of the machine, the valve from the supply tank to the cup is closed and the valve from the cup to the container is open, and the milk flows by gravity from the cup into the container. It starts at a head equal to the total height above the nozzle with the full container, and continues to a zero head as the container empties.

This type of filler gave a lot less foam than the piston type of filler, and no defoamers are used on American Can machines. However, it was much slower than the piston type filler and a large number of cells or cups had to be used on each American Can filler. The American Can fillers were therefore very expensive and much more complicated and were much more difficult to clean than the Pure-Pak fillers.

155 Q. Roughly, what was the cost of these two types of machines?

A. The American Can machine was either leased or sold to the public. It was normally leased because of its high cost.

The prices started for the very smallest machines at upwards of $10,000 in the pre-war period, and the most

expensive ones, their big 120 minute machines such as they installed in New York City, had price tags on them of around $75,000.

The Pure-Pak machine was more than a filler, since it included machinery for setting up and waxing and closing the carton. Those machines were also leased, though sometimes sold, and they started at prices around $10,000 to $12,000 and went up to $60,000 and $70,000.

Q. You said these machines were sold to the public before the war period. What do you mean by that? What trade were they sold to?

A. I should clarify that statement. I mean they were sold to dairies for the purpose of filling milk into paper cartons in the dairy.

Q. What kind of dairies were they as to size?

A. They could be sold only to larger dairy plants
156 because the small dairy plants could not afford a machine of that type. The small dairy plant was accustomed to paying a few thousand dollars, from, we will say, $1,000 to maybe $5,000, for his filling machine for glass bottles.

When he saw these very expensive machines for paper cartons, he found himself unable to afford those machines, paper therefore becoming a thing only for the large dairy.

Q. When you refer to paper, you mean?

A. Paper cartons, paper milk cartons were sold only by the large dairy who could afford the tremendous investment and who had the floor space and personnel to handle these big, complicated machines.

Q. And you are now talking about what period of time?

A. Well, I am talking about the period of time from the inception of the paper carton in the early '30's clear up to the time when my electromatic filler appeared in the field.

Q. And what was the condition of the small dairyman in the face of that kind of sales of filling machines to these large dairies, if you know?

A. Well, here is what happened. The large dairy
157 would begin to see that there was a demand for milk in paper cartons. As the public became accustomed to purchasing milk in stores and as the super market grew as a factor in our retail economy, more and more people bought their milk in stores instead of having it delivered to the home.

The big problem in selling at a store was how to get the bottle back. It had been simple in the earlier days when the dairymen were delivering to the home. Then he would deliver one day and pick up the empty bottle the next day. But when the housewife had to go to the store and buy a bottle, she then had to wash that bottle and bring it back to the store, and there was a big objection to that.

So whenever paper was offered in an area through stores, purchasers at those stores favored by an overwhelming majority the paper carton over the glass bottle. In some areas the dairies had a system called deposits where they paid not only for the milk but paid a portion of the cost of the glass bottle. That portion being returned when they returned it empty.

That was frowned on, not only by the housewife because she had to carry the bottle back and worry about the
158 change, but also was frowned on by the storekeeper because he had a lot of bookkeeping to do.

The result was that when paper went into stores, the sales from those stores became largely paper, and glass was a small part of it after that.

Now the picture of the small dairy was this: A small dairy, we will say, existed in a small town at a modest distance from a large city. For years he had been selling his milk in the retail route directly to the doorstep and had been selling his glass bottles of milk to the store.

A large dairy suddenly showed up in his area with a tank truck and bought raw milk right from under his nose, sometimes from sources from which he had traditionally purchased his milk.

They took that milk varying distances, sometimes as much as 200 miles, to a large central dairy plant where they had installed one of these large complicated, expensive machines for filling that milk into paper containers.

They then hauled back into the same area from which this milk was obtained paper milk cartons filled with milk, and sold them to stores in that area. The housewife
159 who went to those stores immediately preferred paper.

The storekeeper then went to the small dairy and said, "John, why can't you give me paper?" so the dairyman investigated what he could get, and he found that he could not afford to put in the equipment for filling milk into paper. It was expensive, far beyond his means, and in many cases it took up so much space that it wouldn't even go into the small dairy plant.

The result was that he lost that store business. He then had the same overhead, often the same labor, the same plant costs that he had before, but he had lost his wholesale business. The result was that from a profitable enterprise of long standing he, overnight, became an unprofitable enterprise.

Now, what did he do? Some of the dairymen aggressively purchased glass bottles. They preached the advantages of glass bottles. They said they were more sanitary. They said they were cheaper. They, by extolling the virtues of glass bottles, attempted to hold up their business. Some were modestly successful in doing so. Others went into by-products. They would start making ice
160 cream or butter or other by-products in order to maintain their volume.

161 Still others went to the large dairy and became peddlers for the large dairy. By that I mean they bought milk, milk filled into paper cartons, from the large dairy and sold it in their area. Often they gave up their pasteurizing plants and simply became sales outlets for the large dairy.

A surprising number of them simply went broke because they couldn't meet the competition of the large dairy. That competition was predicated upon the fact that the large dairy could afford the money and the personnel and the space to operate these large complicated dairy machines, large complicated filling machines for filling milk into paper cartons, whereas the small dairy could not afford those machines.

Q. Mr. Mojonnier, you have been talking, I believe, about the two types, the piston type and the displacement type of filler that was being supplied at the period of which you are testifying by Pure-Pak and American Can companies.

Were there any other types of fillers then commonly in use in the milk and dairy industry?

A. There was a third large expensive filler which
162 came into use.

Q. I don't mean as applied to paper cartons. I mean any filling of containers for milk, like glass bottles.

A. In the dairy industry, and for that matter in the general food industry at that time, there were five types of fillers in general use: Piston, displacement, siphon, vacuum, and gravity. All the fillers with which I was familiar, and

I believe that is all of them, in that period filled by one of those principles.

Q. Were any of these other types being supplied, as far as you know, for the filling of milk into paper cartons?

A. The only two types that were being supplied for filling milk into paper cartons were the piston filler and the displacement filler.

The vacuum filler would not work because it sucked the sides of the carton in and gave a varying volume of fill beyond all practical limits.

The gravity filler would not work for the same reason because the pressure of the liquid coming in bulged the carton varying amounts.

The gravity filler was also not suitable for a different
163 reason in that the gravity valve was normally spring loaded and had to be opened by the carton. The paper carton did not have sufficient strength to open that valve.

The siphon filler is called by some a variation of the gravity filler and consists of a tube which siphons product out of a tank over the side of a tank and into a container, filling the container to the level of the tank.

This level is determined from the bottom of the container in a siphon filler as contrasted to the level being determined from the top of the container in the vacuum filler and the gravity filler.

Because of the variation in volume of the paper container, the siphon was not practical for filling paper containers. So to the best of my knowledge and observation, all paper containers for milk were being filled by either displacement type fillers or piston type fillers.

Q. Now, I believe you have testified about the time that you left Mojonnier Brothers Company. What was that time?

164 A. I left Mojonnier Brothers Company on January 31, 1946.

Q. Would you state briefly your reason for leaving there, if you care to?

A. I left there to start my own business. I had always wanted to start a manufacturing business of my own in this general field.

Q. And that was the Mojonnier-Dawson Company of which you have testified?

A. We were first called Dawson & Dawson, a partnership. But immediately I became associated with Dawson

& Dawson, I started proceedings to incorporate the company, and it was incorporated in March, 1946, as the Mojonnier-Dawson Company.

Q. And what was the nature of the business of Mojonnier-Dawson Company at its start?

A. We manufactured stainless steel specialties for the ice cream and fresh milk industry, these being built around ideas which I had. They were things like ice cream cutting knives, sampling dippers for sampling milk for testing, stirrers in stainless steel for stirring milk in cans, and a host of other small specialties. That was our initial business.

165 Q. What was the size of the Mojonnier-Dawson Company at its start?

A. We started out with just a few employees. I believe that initially with the three incorporators, we had a total of five in our personnel.

Q. I hand you two circulars entitled "Mojonnier-Dawson Specialties" and "The Mojonnier-Dawson Monthly Digest," and ask if you can identify those.

A. Yes, I can identify these.

Q. What are they?

A. The first one entitled "Mojonnier-Dawson Specialties" is, I believe, our first publication of a price list and of an illustrated catalog of the specialties we sold. We show in here stainless steel tables, stainless steel packing tables, and some of the other specialties that I have mentioned.

The second is a September, 1946 issue of a publication we got out called "The Monthly Digest." I believe this is the second such publication. These four page leaflets went to the jobbers to acquaint them with the products we were making.

In this leaflet we illustrate for the first time a vacuum type filler which we manufactured. Early in our business we bought out a very small plant, a war baby, on the 166 south side of Chicago and got with the purchase a vacuum filler for liquids of all kinds.

Q. What was the name of that plant that you bought?

A. Ward Electric Products Company, at 7020 South Ashland Avenue in Chicago.

Q. Is that filler that is shown on that second circular the one that you took over from Ward?

A. Yes, it is.

Q. That filler was your design, was it?

A. No, that was not my design. I did improve it quite a bit, but it was designed by the Ward Electric Products Company. When we took them over they had a few orders for them, and we made fillers for those orders.

Q. What was that filler designed for, what product?

A. It was designed for filling thin liquids. We applied it to things like automotive specialties, waxes, auto polishes, chemicals, products of that kind.

It was not a sanitary type filler and was not suitable for the dairy industry.

By Mr. McCanna: I hand these circulars to counsel for inspection.

By Mr. Kipnis: No objection.

167 By Mr. McCanna: Will the reporter please mark these as Plaintiff's Exhibits 15 and 16, respectively, for identification? Could we have the one marked "Mojonnier-Dawson Specialties" as 15, as it appeared earlier in time, and the other as 16?

(Thereupon said documents were marked, respectively, Plaintiff's Exhibits Nos. 15 and 16 for identification.)

By Mr. McCanna: I offer these in evidence at this time.

By Mr. Kipnis: No objection.

By the Court: They may be received.

(Said documents, so offered and received in evidence, were marked, respectively, PLAINTIFF'S EXHIBITS NOS. 15 and 16.)

By Mr. McCanna:

Q. During this early period at Mojonnier-Dawson Company, did you have any contacts with American Can Company in reference to fillers?

A. Yes, I did.

Q. Will you please tell us briefly what those con-
168 tacts were?

A. I distinctly recall that during the first week I was with Dawson & Dawson, the first week in February, 1946, a Mr. Cabot from the American Can Company called me from downtown Chicago, and asked if I would come in and discuss with him the possibility of this newly formed company of mine manufacturing some things for American Can Company.

I came down to talk to him, and he gave me a set of blueprints and a set of photographs of the Model 334 American Can displacement type filler.

This machine had been designed and marketed in a

limited way before the war, and at that time American Can wanted to get more of them into production. He told me if there was any way at all that we could produce parts for that machine, he would like to work with us.

I told him we were much too small. We did not have enough facilities for it but I would appreciate the opportunity of keeping the prints and would like to see if some day we might to able to produce machines for them or parts for them.

I still have the prints. We never did produce any parts for American Can's Model 334, however. I did get a
169 chance to study the blueprints very thoroughly.

Q. Did you have any further contact with them about fillers?

A. Later in 1946, I believe it was in July, Mr. Cabot wrote me a letter and said that he needed a syruping machine developed for filling a small quantity of sugar syrup into paper containers for frozen foods, these containers having previously been filled with chopped up fruit.

He described the container to me, I believe over the telephone, and asked that I go out and get some at the store to see what they were like.

The container was about four inches long, about an inch and a half wide, and was filled on a belt by hand with fruit for subsequent syruping, as they called it, with a thin sugar syrup.

He wanted a machine to put this syrup over the fruit into the paper cartons. He asked me in the letter if I would like to try to develop such machine, and asked if I had any ideas.

Q. And what was your response to that?

A. My response was that I would be happy to see if any of the machines that we had could be adapted,
170 either in whole or in part, to this job, and that I would try to develop something for this purpose.

Q. At that time did you have any ideas about fillers operating on any principle other than the types that you have been previously telling about?

A. You mean in July?

Q. Yes.

171 A. No, I did not. My first move was to see if we could adapt the types of filler we were then making, which included a vacuum filler and a small piston type to do this job. I made some sketches along those lines but was never able to work out anything satisfactorily.

Q. Did you ever propose to Mr. Cabot of the American Can Company the making of any filler on any other principle?

A. Yes, I did. In the fall of 1946, I conceived the idea of accomplishing this syruping operation by a timed flow filler.

During the early part of 1947, I constructed a very crude experimental machine on which I made a number of tests. These tests convinced me that there was a possibility that this idea might be developed into a filling machine.

I then wrote Mr. Cabot a letter, I believe it was in March of 1947, stating what experiments I had made and asking if he would comment on my ideas and if he would let me manufacture or construct for him a filling machine so that we could try out these ideas to see if they were any good.

172 Mr. Cabot's reaction was that the idea couldn't possibly work; that it was much too simple; if such an idea would work, somebody would certainly have thought of it before.

He countered with a blueprint prepared by someone in his engineering department of a somewhat complicated vacuum type filler for these paper cartons and asked if I would make that syruper for him. I told him I did not feel we had facilities for making it and declined to quote on it.

The project dropped at that point. I was unable to interest him with going ahead with any experimental machine based on any of my ideas.

Q. When you wrote to Mr. Cabot, you say, in March, 1947, did you send him anything further than the letter, I mean, any further disclosures?

A. Yes. I wrote him a sales letter and tried to interest him in the idea and I sent him some prints of some sketches which I had made, showing various ways in which I thought I could make this idea into a practical machine and showing a method by which I thought I could mount the proposed unit on a conveyor for continuous operation.

Q. Do you have a record of these transactions to 173 which you have just been testifying?

A. Yes, I do.

Q. I hand you a batch of correspondence and ask you if you can identify this, together with the sketches.

A. Yes. This is the record of which I have been speaking.

Do you want me to mention these?

Q. Please, just briefly by the date and who the letters are written to and tell us about the ones you received and the ones you wrote.

A. There is a letter dated July 11, 1946, signed by Mr. W. K. Cabot of the American Can Company asking if I would do this job.

There is a letter from him dated November 1, 1946, expressing disappointment that I haven't done something so far.

A letter of January 7, 1947, again referring to the matter.

A letter, a carbon copy of a letter I wrote to Mr. Cabot on January 10, 1947 stating that I was working on the problem.

A reply from Mr. Cabot to me dated January 14, 1947, saying that he was interested.

174 A letter from Mr. Cabot to me dated February 19, 1947 saying that he is sending some sample frozen food containers with which to test the experimental device.

Then, next in chronological order is a letter of March 7, 1947 from Mr. Cabot to me in which he encloses a blueprint which is attached here, No. 238-20-111, showing a vacuum type syruper and wherein he asks if I won't develop that.

And then there is a carbon copy of a three-page letter which I wrote to Mr. Cabot under date of March 18, 1947, trying to interest him in the idea, in the hope that he would let me build for him an experimental unit to try out this idea. Attached to this letter are three sketches, one showing a general idea of the filling machine which I thought could be built out of this idea; one showing how I thought it could be made to work, and another showing how I thought it could be mounted onto a conveyor.

There is, finally, a letter dated May 9, 1947, or rather a carbon copy of a letter which I wrote to Mr. Cabot on that date asking what he was doing about my proposal of March 18th.

175 I seem to have no answer on that but recall that he told me it couldn't possibly work and the idea was dropped.

By Mr. Clement: I object to that as hearsay, your Honor, that last statement, and move that it be stricken.

By The Court: How is it material?

By Mr. McCanna: If your Honor please, this correspondence and these sketches deal directly with the inven-

tion, the early ideas of it. I just wonder if you care to look at it at this time.

By the Court: Do you offer it?

By Mr. McCanna: Some of this has been put in.

By the Court: Are you offering it?

By Mr. McCanna: I believe I have already submitted this material.

By the Court: Are you offering it now?

By Mr. McCanna: Yes, I offer it.

By Mr. Clement: May I see it a moment?

By Mr. McCanna: For counsel's information, there are more sketches that follow this, dealing with the 176 invention and we will produce those presently.

By Mr. Clement: Are those some of the sketches that were produced in connection with the signed deposition? There were some additional sketches.

By Mr. McCanna: Yes, and I may say at this time, Mr. Clement, that here is a set of the sketches that Mr. Cabot sent to Mr. Mojonnier and which, for some reason, maybe because of the size of them, are not included in that discovery material and I am giving you a copy now. The original prints are in this batch that I have just handed you. I don't believe you have seen these before.

By the Court: We will recess at this time until 2:00 o'clock.

By the Marshal: This Honorable Court now stands at recess until 2:00 o'clock this afternoon.

(Thereupon at 12:30 o'clock p.m. a recess was taken until 2:00 o'clock p.m. of the same day, Wednesday, May 18, 1955.)

177 IN THE UNITED STATES DISTRICT COURT.
* * (Caption—54-C-277) * *

Chicago, Illinois,
Wednesday, May 18, 1955,
2:00 o'clock p.m.

Court convened pursuant to recess.

Present:

Mr. McCanna
Mr. McKnight
Mr. Pillote
Mr. Allen
Mr. Clement
Mr. Voland
Mr. Houghteling
Mr. Bernat
Mr. Kipnis
And other Counsel.

178 And thereupon the following further proceedings were had herein: —

By the Clerk: Case on trial.

By the Court: Proceed.

By Mr. McCanna: I am just checking on this last exhibit.

By Mr. Clement: Your Honor, I made an objection just as we were recessing.

By the Court: Yes. What is the objection?

By Mr. Clement: Not to these exhibits, but to a portion of his testimony at the very last where he said something about some expert had told him it wouldn't work, or something like that.

By the Court: Yes. Well, I haven't ruled on it.

These exhibits, is there any objection to this offered exhibit?

By Mr. Clement: No objection, your Honor.

By the Court: It may be received.

(Said documents, so offered and received in evidence, were marked respectively PLAINTIFF'S EXHIBITS 17 to 30 inclusive.)

179 By Mr. McCanna: I would like to have the witness tell us more about this exhibit 17 and particularly the

sketches that he has attached or that were attached to the letter of March 18th.

By the Court: What do you want to do with it?

By Mr. McCanna: Of course, that, your Honor, is the first disclosure.

By the Court: Yes.

By Mr. McCanna: The first disclosure.

By the Court: Yes, I understand it, but why do you want to put it in? Are there any critical dates in there?

By Mr. McCanna: Yes, there are.

By the Court: What are they?

By Mr. McCanna: And there is critical subject-matter.

By the Court: What are the critical dates and why are they critical?

By Mr. McCanna: Well, they show his early conception of the invention.

By the Court: I understand that, but I say why are the dates critical?

180 By Mr. McCanna: The particular disclosure in these sketches, that disclosure is different from some of his later disclosures, of his conception, and they are steps in the witness's mind as to how he was working this thing out and the defense challenges that he has made an invention—

By the Court: Well, that is so, and I understand that. They say that it is anticipated. I understand it. But, the critical dates—do you gentlemen think you—

By Mr. Kipnis: No issue of priority.

By the Court: That is what I thought.

By Mr. Clement: No, there isn't, your Honor.

By Mr. Kipnis: We withdrew that.

By the Court: There is no issue of priority.

By Mr. McCanna: Well, this has been offered for what it contains.

By the Court: Yes.

181 ALBERT B. MOJONNIER, called as a witness on behalf of the Plaintiff herein, having been heretofore duly sworn and examined, resumed the stand and testified further as follows:

Direct Examination (Ctd.) by Mr. McCanna.

Q. And now, I will ask the witness, in this early period in 1947, did you make any other sketches concerning this invention?

A. Yes, I did.

By Mr. McCanna: Will the Reporter please mark this Plaintiff's Exhibit No. 31 for identification?

(Thereupon said document was marked Plaintiff's Exhibit No. 31 for identification.)

By Mr. McCanna:

Q. I will ask you what those are.

A. There is a sketch here—

Q. (Continuing) And who made them.

A. I made these sketches. One of them shows an idea for a tank with a valve and a solenoid in it.

The second one shows a sketch of the nozzle which
182 I constructed for that first laboratory pot on which I made the experiments for American Can Company and it has attached to it a production order dated January 14, 1947, by which I asked the man in our shop to turn up, on the lathe, the nozzle to this sketch.

183 And the third sketch is one showing a possible arrangement of a tank and a float and a solenoid and a nozzle on which I have done some calculating of what the variation in fill might be for a given variation for a liquid level.

I show there the basic equation by which this filler works, that the velocity of flow is equal to the square root of the course of gravity, times the head, and show that the velocity of flow varies as the square root of the head, and come to the conclusion that with a 20 inch head, a variation in head of one inch would give a variation in fill from this particular source of about 2½ per cent.

By Mr. McCanna: I will offer these sketches in evidence.

By the Court: Any objection?

By Mr. Clement: No objection.

By the Court: They may be received.

By Mr. McCanna: Those will be Plaintiff's Exhibits 31, 32, 33 and 34.

(Thereupon said documents were marked, respectively, Plaintiff's Exhibits Nos. 31, 32, 33 and 34 for identification.)

184 By Mr. McCanna:

Q. Now, Mr. Mojonnier, this laboratory model that you told us about, just what was that?

A. I had the idea that if I could construct a mechanism which would carry out the basic theory of timed orifice flow, I might be able to make it into a filling machine, so I bought a stainless steel bucket.

To the best of my recollection, the bucket was about seven inches in diameter by possibly eight inches deep. It had a bail therein. I cut a hole in the bottom of the bucket and I inserted therein the nozzle, which is shown on the sketches which we have just been discussing.

I bent up a piece of steel, put it across the top of the bucket and mounted thereon an open coil which I took from some piece of electrical equipment, probably a solenoid valve which I had around the shop.

I borrowed from a local representative of the Photo-Switch Company, a standard electronic timer and hooked thereto a microswitch for tripping the timer.

I clamped this bucket with the coil and the nozzle
185 and a rod connected thereto onto a bench and hooked the outlet circuit of the timer to the coil.

I then got a glass graduate, placed it under the nozzle, tripped the timer, observed the amount of liquid water filled into the glass graduate, poured the contents of the graduate back into the container and repeated. I made numerous tests that way with different heads and I later tried different nozzles.

186 Q. And where was this done?

A. This was done in the Mojonnier-Dawson plant at 9451 Fullerton Avenue, Franklin Park, Illinois.

Q. Do you know what became of that model?

A. The model was broken up and to the best of my knowledge is no longer in existence.

Q. Did you do anything with this filler idea as you had it in the model toward disclosing it to others or trying to promote its progress?

A. Well, I was in the position of having an idea which

I believed I could make into a successful filling machine. I had approached, as the record already shows, the American Can Company and tried to interest Mr. W. K. Cabot in letting me make a filler which would embody these ideas to see if it would be practicable.

Our company did not have the money at that time to make a filler independently and experiment with it. We were too poor.

I showed it to other prospective customers, and from all I got the same reaction: Why, that thing is silly. If it were that simple somebody would have thought of it before.

Q. Do you recall any contacts with the Bowman
187 Dairy Company?

A. Yes, I do.

Q. Will you tell us about that?

A. In February of 1948, I received a telephone call from Mr. Al Geiss of the engineering department of the Bowman Dairy Company.

I had been acquainted with Al for a great many years because I worked with him during my time of employment at Mojonnier Brothers Company.

As nearly as I can remember the call, he said that they still had in their warehouse the large complicated Mojonnier vacuum machine, vacuum filler, for filling cans with whipping cream.

I asked him if that was the same unit which I had made at Mojonnier Brothers Company before the war for Charlie Thom, at Advance Packaging. He said that it was. He wanted to know if I had any better ideas for filling cans of whipping cream.

I told him that I had an idea which I thought could be made into a filler, and I believed that it could be adapted to a problem like filling his cans with whipping cream
188 because his problem was one of filling constant volumes of thin liquids.

He asked me how we might be able to find out if it might work. I suggested that we bring some cream out to the Mojonnier-Dawson plant, and that we try running the laboratory experimental pot on cream in somewhat the same manner that I had previously run it on water.

During February, 1948, Mr. Geiss and two other gentlemen from Bowman Dairy Company came out to our plant. They brought with them two small cans of whipped cream mix, a few of the metal cans into which it was to be filled,

and some valves which they were then designing. The valve was a dispensing valve for cream to be put on after the filling.

We poured cream into this laboratory pot with which I had been experimenting, placed empty cans under the nozzle, tripped the timer and filled a few dozen cans in that manner. After each fill we poured the contents of the can previously filled back into the container to maintain the liquid head.

We filled, as I have said, a few cans that way, and it appeared to me that I would be able to make a filler
189 out of that idea which would meet the requirements of the Bowman Dairy Company.

190 Q. Now do you mean you maintained that hydrostatic head by pouring the contents of each filled container back into the tank?

A. That is right. As I recall, I operated the timer and Al Geiss fed the cans in, and Ernie Starck, the laboratory man who came out, poured the cans back.

Q. Who was this Ernie Starck?

A. He was one of the three men who came out. He was a Bowman Dairy employee. He is employed in their plant at Ontario and La Salle Streets in Chicago.

Q. And what was the outcome of that test?

A. Al Geiss asked me how we could make arrangements whereby an experimental filler could be made to be tried out on their product. I told him that we did not have the money to construct one and experiment with it.

Out of the conversation came an agreement whereby Mojonnier-Dawson agreed to construct, according to the ideas which I had at that time, an experimental filler for whipping cream, to mount it on a table yet to be purchased by the Bowman Dairy Company, and to place it in their plant on a conditional basis.

191 The condition was that we estimated the cash outlay for constructing this model would be $385. They agreed to pay that $385 to Mojonnier-Dawson Company on their regular terms, which is payment approximately the first of the month following invoice.

We agreed that if the machine did not work, we would take it back and refund their $385.

Q. And did you proceed on that agreement?

A. He asked if I would put that into a letter, and as I recall I put it into a letter, the date of which I believe to be the 20th of February, 1948. He subsequently, on

or about March 1, 1948, placed an order with Mojonnier-Dawson Company for one filler to be made according to the terms of that agreement, and we proceeded to construct that filler.

We did construct a filler and we delivered it to the plant of the Bowman Dairy Company at La Salle and Ontario Streets in Chicago on April 12, 1948.

Q. Do you have that letter that you have just mentioned?

A. The letter of February 20th?

Q. Yes.

192 A. I do not have that.

Q. Do you know where it is?

A. No, I don't.

Q. Do you have any idea as to where it might be or what might have become of it?

A. I know the original was mailed to the Bowman Dairy Company, and I know that the file copy of that letter has long since been destroyed because we destroy our normal correspondence after a period of five years.

Q. Have you tried to obtain that letter from Bowman?

A. Yes, I have. I have asked Al Geiss to carefully search his files to find that letter, and he has been unable to find it.

Q. Now you say that you made a filler for Bowman as you proposed. Did you use any drawings or make any drawings in that connection?

A. Yes, I did. I made a rather complete set of sketches of that filler.

Q. I hand you a batch of sketches and ask you what you know about that.

A. This is the set of sketches which I made immediately after Bowman placed their order with us on or about March 1st, 1948.

193 It shows the ideas that I had at that time for the construction of a filler to work on this principle.

194 Q. Did you make all of these sketches personally?

A. I made those all myself.

By Mr. McCanna: I will ask the Reporter to mark these as Plaintiff's Exhibit 35 for identification.

(Thereupon said sketches were marked Plaintiff's Exhibit No. 35 for identification.)

By Mr. McCanna: Photostatic copies of these have been produced heretofore in depositions, your Honor.

By Mr. Kipnis: How many sheets of drawings are there, Mr. McCanna?

By Mr. McCanna: There are twelve sheets of drawings, and I am offering this exhibit, Plaintiff's Exhibit 35, in evidence. I believe it is of interest in this case.

By The Court: Any objection?

By Mr. Kipnis: No objection.

By The Court: It may be received.

(Said sketches, so offered and received in evidence, were marked PLAINTIFF'S EXHIBIT NO. 35.)

By Mr. McCanna: Do you care to see it, your
195 Honor?

By The Court: Yes.

Go ahead.

By Mr. McCanna:

Q. Mr. Mojonnier, in making this first model for Bowman, how did you put the parts together? Where did you obtain them? Is there anything significant in that connection?

A. Well, as I have stated, we were not in a financial position to make on our own an experimental filler and work with it until we saw whether we did or did not have something. Therefore when this order was placed, I immediately looked around for sources of material that wouldn't cost too much.

I remember while I was at Mojonnier Brothers Company, we had made a mistake on the size of a small tank and had rolled up a cylinder somewhat too small for the purpose intended. The cylinder was out of stainless steel, and about the size of a tank that I wanted for this machine.

I had obtained that cylinder from the junk pile at Mojonnier Brothers Company, and had buried it in my back yard, using it to keep night crawlers in for the times that I went fishing.

196 I went out in the yard and I dug that up. Being stainless steel, it was in good shape. I had it polished and used it as the side wall of the tank.

I found in the plant of Mojonnier Brothers Company a portion of a head of some other tank that had been made some time previously, but was not used. I used that as an inverted bottom, welding it to the side wall that I have just mentioned, and in that way constructed the tank for Bowman Dairy Company.

I believe, though I am not sure at this date, that I used

on the Bowman Dairy Company unit the experimental timer which I had borrowed from the Photoswitch representative, and then arranged to pay him for it later.

The other parts I got from around the shop in the usual course of business.

Q. I hand you a photograph and ask whether you can identify that and tell what it shows, if you know.

A. This is a photograph of the machine about which I have just been talking, mounted on a table. As I believe I mentioned, the Bowman Dairy Company ordered two stainless steel tables shortly after they ordered this 197 filler, and I knew that they were to be made into an experimental filling line for whipped cream containers.

They asked me to mount this filler on the righthand back corner of one of these tables. We did so, and took a photograph just before shipment of this machine.

This is a photograph of the machine just before shipment, and it was used like that for some time at Bowman's.

By Mr. McCanna: I will ask that this be marked Plaintiff's Exhibit 36 for identification.

(Thereupon said photograph was marked Plaintiff's Exhibit No. 36 for identification.)

By Mr. McCanna:

Q. Does this photograph show the filler that you have testified to that you made and sent to Bowman's on that order?

A. Yes, that shows the filler I have testified to made in response to that conditional order of March, 1948.

Q. Do you know when this photograph was taken?

198 A. I am quite sure that photograph was taken on April 12, 1948, the date that we made the shipment, taken just before shipment.

199 Q. Where was it taken?

A. In the plant at Mojonnier-Dawson, at 9151 Fullerton Avenue, Franklin Park, Illinois.

Q. How soon after the photograph was taken did you send this filler to Bowman's, if you know?

A. The same day.

By Mr. McCanna: I will offer this photograph in evidence.

By The Court: Any objection?

By Mr. Kipnis: No objection.

By The Court: It may be received.

(Said document, so offered and received in evidence, was marked PLAINTIFF'S EXHIBIT No. 36.)

By Mr. McCanna:

Q. Now what happened to the filler, if you know, after it was delivered to Bowman's?

A. It was delivered to Bowman's and a very few days after the date of delivery, they put it into their cream room, placing it in an experimental line consisting of this filler, a crimping machine, and an experimental gassing machine for introducing nitrous oxide into cans 200 as a propellant for the whipping cream.

I then spent a great deal of time down at Bowman Dairy Company experimenting with this machine and testing it. I worked with Mr. Ernie Starck, who was in the plant down there, and also with Mr. Al Geiss in the Engineering Department.

We had some trouble with it. We corrected the trouble after an experimental period, and it was used in that experimental line for some months subsequent to its installation. I made a number of tests, drew some charts showing the rate of fill for different sized nozzles, and I believe I have records of those.

Q. I hand you a series of papers and ask whether you can identify those.

A. Yes, I can.

The first of these is two notations, both dated April 12, 1948, in my handwriting, which hold the list of materials and an estimate of labor required to make a filler of this type, and set up a tentative selling price of the filler if we should get it into practical sale.

The second is a sheet dated April 17, 1948, entitled "Bowman Filler," giving a number of tests with 201 the $\frac{3}{4}$ inch nozzle. There are two pages to that notation.

Then there are two charts, both dated April 16, 1948, in which I have plotted seconds filling time against ounces of flow through both the $\frac{3}{4}$ inch diameter nozzle and $\frac{1}{2}$ inch diameter nozzle, both using water, and have also plotted nozzle size against ounces of flow with several different filling times.

These are charts of tests made at Bowman Dairy Company on the machine that I have been talking about. Mrs. Mojonnier was with me on some of those tests, and Mr. Geiss was with me on some, and Mr. Starck on some.

Q. Through what period were those tests made?

A. They were made in the month of April, 1948. They began a few days after the machine was shipped to Bowman Dairy, so they apparently began about April 16, 1948.

Q. Was this Bowman machine complete, to the best of your views, at that time? I mean, did it contain a complete assembly of parts according to your ideas.

A. Yes, it did. That was the first machine which contained all the elements that I had conceived as being
202 necessary to the application of this idea to the construction of a practical filling machine.

Q. Now do you know about when the Bowman machine was actually put into commercial use in filling the whipping cream into cans?

A. I have said that it was in an experimental line for pressurized cans. Sometime after these experiments, I believe it was in the month of May, 1948, after they could see that the machine was going to work, they filled a few fountain whip cream containers, which are large stainless steel containers, gassed by the use of cartridges or by other methods, not concerned with the experiments they were conducting.

I believe they sold a few of those in May, 1948. The machine was put into commercial use on filling cans of whipping cream until the fall of 1948, at which time it was submitted to the U. S. Public Health Service for inspection, and was approved by the Bowman Dairy Company and put into full time use filling cans of whipping cream which were sold on the market in Chicago.

203 Q. Was this filler paid for by Bowman?

A. This filler was paid for in the first few days of May, 1948.

Q. Now, then, following the making of this machine for Bowman, what did you do in connection with this filler idea of yours?

A. Well, I naturally was elated at the realization that this idea I had been trying to solve so long, actually did work. I immediately looked for places where I could sell fillers.

The first such application that came to view was other plants filling whipping cream, because Bowman was not the only company in the country wanting to fill whipping cream, and we sold a modest number of such filling machines for whipping cream during 1948.

Q. Did you go into any other fields besides the whipping cream?

A. Yes, we did.

Q. Will you tell us about that?

A. In, I believe, it was July, 1948, a man by the name

of Swenson from the Chase Products Company in Maywood, called me up and said he had heard I had a filling ma-
204 chine which was filling crown cans with wipping cream.

I told him that was true and described the Bowman Dairy machine to him. He said he was in the business of selling aerosol bombs and I sold him that I had been familiar with the early developments in that business.

He asked if I thought that this machine could be adapted to fill aerosols and said that the reason he had come to see me was that the cans he was using were identical to the cans that Bowman Dairy Company was using. He was filling aerosol products into them and the Bowman Company was filling whipping cream into them.

He asked point blank if the machine would fill cold Freon.

I knew generally at that time how the aerosol industry was experimenting and knew that they were working on cold filling, so I discussed with him what he was doing, over the phone, and found that he was refrigerating his Freon to minus 30 degrees Fahrenheit, at which point it was a liquid at atmospheric pressure and was refrigerating his concentrate which was largely kerosene with DDT in it, to about minus 5 degrees Fahrenheit.

205 He was then filling these as liquids into cans through solenoid valves using a diabetic scale to cut off the solenoid valve when the can had reached a predetermined weight.

This method of filling, he said, and I observed later, was very costly and very slow and caused a tremendous waste of the product, particularly the Freon.

The result of the phone conversation was that he invited me to try our filler out, so I took the experimental laboratory pot, which I talked about earlier today, over to his plant on St. Charles Road and 19th Street in Maywood and poured some Freon into it.

I operated it on Freon, maintaining a constant level by pouring the cans back in and found that the unit would fill Freon. Its valve would not freeze up. The accuracy seemed to be pretty good and I believed that from those experiments a filler could be made which would fill these products successfully.

I realized I would have to refrigerate the tank but I knew how to put refrigerator coils around a tank and connect them to a small refrigerating unit. The result
206 of that visit was that he signed a conditional sales contract for a machine to be delivered by Mojonnier-

Dawson Company embodying my ideas, consisting of two tanks: One for filling concentrate and one for filling Freon, both to be filled as liquids at below zero temperatures.

That machine was made, which was shipped to him in the fall of 1948 and, to the best of my knowledge, is still in operation.

207 Q. To whom was that shipped?

A. The Chase Products Company at Maywood, Illinois.

Q. Now, was there any activity connected with this filler and with paper cartons during this period?

A. Yes, there was. I was familiar with the needs of the small dairies. I knew that they desperately needed a paper carton filler and it was during this period that I began working on the adaptation of my filler to filling paper containers with milk.

In this period I was contacted by one Julius Zinn, who told me that he had perfected a machine for manufacturing a paper carton which he was going to sell primarily to small dairies, that is, he was going to sell the carton and not the machine.

He explained to me that his plan was to set up plants using his machinery to manufacture these paper cartons, at various points in the country, and to sell these cartons to small dairies.

I therefore began, during this period, working with him on the possibility of adapting the electromatic filler to the filling of these paper cartons for dairies.

Q. Now when you say "electromatic fillers" what did the term "electromatic" mean?

208 A. Well, the filler that I am talking about is the filler about which I have been testifying. We gave it the name "electromatic" as a trade mark in the early part of 1948, to illustrate the fact that it was electric and automatic.

Q. And this electromatic trade mark has been used right along in designating this filler?

A. It has been used continuously in designating this type of filler.

Q. Mr. Mojonnier, can you tell us briefly whether or not your contact with Mr. Zinn materialized into the making of a filler for the Zimpak carton?

A. Yes, they did.

Q. Will you tell us how that came about?

A. To make a long story short, I developed an adapta-

tion of my filler to the Zimpak carton and also developed a long streamlined machine made from some of the basic designs which I had used in past years and had used them on the Chase Products machine.

This long, streamlined unit was for the closing and sealing of the Zimpak containers.

I made some sketches showing how that machine would look before I constructed the machine.

Mr. Zinn, in the summer of 1948, asked me for per-
209 mission to use those sketches, plus some photographs of the filler itself in the preparation of some promotional material to be used by him to interest prospects in buying his carton forming machines for making cartons.

Mrs. Mojonnier and I talked it over and we finally gave him the company's permission to use those. He had an artist submit a drawing using some photographs and some sketches and air brushed it in the usual manner so that it looked something like a photograph.

Q. Did you collaborate in that?

A. I inspected it. Mrs. Mojonnier and I both inspected it after it was in sketch form, made some suggestions as to how the artist should change it to get closer to what the machine might eventually look like and, in general, approved what the artist had done.

Q. Do you know what was done, if anything, with that sketch?

A. Well, the first thing, apparently, that was done with it was that Mr. Zinn took it to the Olson Publishing Company in Milwaukee, Wisconsin, and caused a news article stating that the Mojonnier-Dawson Company had de-
210 veloped a filler, to be published in the August, 1948, issue of the Milk Dealer. I didn't know anything about that article until I saw it in the Milk Dealer. He prepared it.

Q. Were there any reactions that you know of as the result of the publication of that article?

A. Yes, there were. Mr. Joseph Rosen of the Illinois Creamery Supply Company, whom I had known for many years, called me up a day or two after the magazine had been published and said, "Al, what is this all about? It says here that you have a filler designed for Zimpak cartons."

211 By Mr. Kipnis: If the Court please, I don't like to interrupt the witness, but I am just wondering how

this is relevant. The Zinn issue is completely out of the picture, so far as I know.

By the Court: Well, I don't know. I don't know.

By Mr. McCanna: Well, it is relevant in this way, your Honor: That the reaction from this publication brought Mr. Rosen into the picture and as the head of the Illinois Creamery Supply Company, he took on the exclusive sale of this filler, which was a combination of a sealer and a filler, and went out and exploited it and obtained a marvelous reaction from the trade and we believe that in itself is evidence of the small dairy's immediate reception of this invention and I believe it is material in showing the trade acceptance of the invention and recognition of filling a long felt need.

By the Court: We don't need to know all about the details. We need to know how many were sold, if any.
212 Were there any sold?

By Mr. McCanna: Yes. I would like to have the witness tell about it.

By the Court: How many were sold? How many?

By Mr. McCanna: I think there were probably—not probably—I am informed that when Mr. Rosen sent out his publication to the trade—

By the Court: If we go on the way we have started in this case—when did we start, yesterday? Well, we didn't waste any time yesterday. But, if we go on this way, this case won't take three weeks; it will take three months. There is absolutely no need in it, so far as I can see.

By Mr. McCanna: Well, there was over a million dollars involved.

By the Court: A million dollars doesn't mean any more than a dollar. A million dollars doesn't mean any more than a dollar. Just what happened? How did he sell
213 them? Did this man sell any machines? That is the whole story.

By Mr. McCanna: He sold a whale of a lot of them.

By the Court: Well, how many?

By Mr. McCanna: They were never delivered. That is the thing, your Honor. I can't answer that question unequivocally. That is where the trouble is in this thing.

By the Court: This case will never get over with.

By Mr. McCanna: I think we can cover it, your Honor.

By the Court: After you have gotten everything in that you want to put in, the Court will never be able to

sift the important thing the wheat from the chaff. You will be lost.

By Mr. McCanna: That is the first time—

By the Court: It doesn't make any difference. I don't see any need for putting all of this in. I am hoping that sometime I will find out whether you have got a pat-
214 ent. I am hoping for it and I am hoping you will get there momentarily.

By Mr. McCanna: Well, then—

By the Court: You better get there pretty quick.

By Mr. McCanna: (Continuing.) —couldn't we summarize it briefly?

By the Court: Yes, summarize it briefly, but I don't want every thought every man had, and every word he said.

By Mr. McCanna:

Q. Will you please summarize briefly the outline of the Illinois Creamery Company offering this combination filler and sealer to the dairy trade?

By Mr. Kipnis: May I note an objection, your Honor? The Illinois Creamery Company has no connection with the plaintiff. It has *no connection* with this defendant. I don't know how this witness knows what happened. He wasn't selling it.

By the Court: He was selling the machine to—what? It was a machine to make—

By Mr. McCanna: To make and sell the Zimpak carton. It is a paper carton.

215 By the Court: Why do I have this in this patent case?

By Mr. McCanna: It is a paper carton. It shows evidence of the trade acceptance and reaction.

216 By the Court: Of what? Trade acceptance of what?

By Mr. McCanna: Of the first time they had offered it to them.

By the Court: Trade acceptance of what?

By Mr. McCanna: Of the Mojonnier invention.

By the Court: Well, I honestly think you are putting in just a mass of matter that is wholly immaterial. I don't say it is irrelevant. Probably everything Zimpak thought about it is relevant over the years, but you don't put in everything in a lawsuit that is relevant. Even if it is relevant, it isn't material. What difference does it make?

By Mr. McCanna: It goes to the utility of the invention.

By the Court: Well, it is atmosphere. Well, sometimes you have got to have something more than atmosphere.

By Mr. McCanna: Could we briefly summarize that?

By the Court: Well, do it and do it quickly.

By Mr. McCanna:

Q. Will you please answer the question, then, that 217 I had put?

A. Briefly, Illinois Creamery Supply negotiated a contract with us to sell these machines. They offered them to—

By the Court: Sell which machines?

By the Witness: The Mojonnier filler for filling paper milk cartons of the Zimpak variety. They offered them to the trade and several thousand machines were immediately sold for a total dollar volume of something considerably over a million and a quarter dollars.

Twenty odd machines were made and delivered by the end of 1949.

At that time, the Zinn program of making paper cartons collapsed, due to the inability of the Zimpak Corporation, which he had formed to produce cartons in sufficient quantities or of satisfactory quality, to meet the trade's needs, and the Mojonnier-Dawson Company took a terrific loss, which pretty near folded it up, due to its having to stop a production program in which it had had all of its capital invested.

By Mr. McCanna:

Q. Following that, what did you do further in the 218 way of applying this filler in the milk industry?

A. Very shortly after that, in fact immediately after the collapse of the Zimpak program, Mrs. Mojonnier and I went to the offices of the American Can Company in Chicago and persuaded them to sell paper cartons to small dairies who would use our filler.

They previously had not wanted to sell cartons to small dairies because they could not, economically, tie up one of these large, expensive machines of theirs for the sale of a few cartons a day.

When they saw that a simple, inexpensive machine was available for filling their cartons, they immediately began to sell cartons to the small dairies.

From that point, the sale of the Mojonnier electromatic filler for filling paper cartons has grown steadily.

Q. I call your attention to this machine here in the courtroom, the first one, the one closest to you, and ask where that machine came in your program of making electromatic fillers.

A. That is the first model which we made. It was sold reasonably widely for the filling of whipping cream and for laboratory filling of aerosol products.

219 We call it our Model WC-1, whipped cream No. 1.

By Mr. McCanna: Will the reporter please mark this machine as Plaintiff's Exhibit 37 and I offer it in evidence.

By the Court: Any objection?

By Mr. Clement: No objection.

By the Court: It may be received.

(Said machine, so offered and received in evidence, was marked PLAINTIFF'S EXHIBIT NO. 37.)

220 By Mr. McCanna: I would also like to offer in evidence the papers which the witness told about in his checking and testing of the Bowman machine.

By the Court: Of the what?

By Mr. McCanna: The filler at the Bowman plant.

By the Court: Any objection?

By Mr. Clement: I object as to the relevancy. I don't see what connection it has on the question of patent infringement.

By Mr. McCanna: Well, the defendants, as I understand it, are claiming that this Bowman machine was a public use and sale, contrary to the statute.

Now, this is one of the elements of evidence showing its experimental use at the plant there, at the Bowman plant.

By the Court: Well, it may be received.

By Mr. McCanna: Will the Reporter please mark this group of papers as Plaintiff's Exhibit 38.

(Thereupon said group of documents so offered and received in evidence, were marked PLAINTIFF'S EXHIBIT 38.)

221 By Mr. McCanna:

Q. Mr. Mojonnier, are you acquainted with Maurice J. Brasile?

A. Yes, I am.

Q. Will you recount your first contact with Mr. Brasile?

A. I first met Maurice J.—

By the Court: You know, I would just be delighted to hear about a patent. Can't you tell me something about the patent?

By Mr. McCanna: Your Honor, we have an expert.

By the Court: You can bring in some other supplementary matters, but I would be just delighted if you could tell me something about the patent.

By Mr. McCanna: Your Honor, we have a very good presentation to make here of the patent, but I feel that our case comprehends these infringing acts and the acts of the defendants and that I should have an opportunity to present that.

By the Court: Well, I would like to hear about a
222 patent so that I know whether you have got a patent or not.

By Mr. McCanna: If your Honor pleases, then—

By the Court: Can't you do that? How did you organize this lawsuit? I am getting into the woods around here and I won't be able—

By Mr. McCanna: I would be happy to present that right now, if you wish, and ask to reserve the opportunity of bringing in this other evidence as part of my prima facie case. I would be happy to do that.

I believe we are entitled to present that in the record and I have Mr. Fishleigh here and we would be glad to go into the matter of the patent.

By the Court: What about the infringement matter? What is that? What is it? Tell me.

By Mr. McCanna: The infringement matter?

By the Court: I don't know whether it is or not. You are claiming infringement. What about it?

By Mr. McCanna: I went into that fairly carefully
223 in my opening statement in showing that Mr. Brasile, who had been a milk man or dairy man and had operated one of these Zimpak machines came to Mr. Mojonnier and asked him whether he could adapt his filler to a Pure-Pak carton and would he enter into the manufacture of that and give Mr. Brasile an exclusive license. Out of that came this agreement of December 29, 1951, with Mr. Palivka and Mr. Brasile. Out of that came the exclusive license and the Mojonnier-Dawson Company went ahead and made a special machine which they called the Model CP and the two—these two concerns went into business and continued to get along and they sold quite a few machines.

Then, all unknown to Mr. Mojonnier, it developed that Mr. Brasile started to make a competing machine and using the teachings of this Mojonnier patent and that continued along, we say, surreptitiously, and Brasile brought in the largest jobber, who is the Brooks Supply Com-
224 pany out in Joplin and had Mr. Brooks bring in a whole bunch of salesmen, some seven or eight and gave them a big story on this new machine which he had developed which was to displace the Mojonnier machine.

And then, Mr. Brasile sent this machine up to Ex-Cell-O and had it tested with the intention of having it manufactured.

In the meantime, Mr. Brasile had incorporated two companies, this U. S. Filler Company and this U. S. Carton Forming Corporation.

By Mr. Clement: If your Honor please, I would like to interrupt. I think perhaps Mr. McCanna may have forgotten your order entered some time ago about treating Count I as first in the order of the trial and I think we could handle the infringement question very expeditiously immediately without getting into all this background about what happened before the patent relation, which background, for the great part is on Count III, not on the
225 infringement, as I understand it.

By Mr. McCanna: We say Count III could be Count I. It is all one and the same thing. It is infringement and wrongful appropriation of the invention. It is very similar to this Colgate case which was recently decided in the East where there were wrongful appropriations and the whole case turned on that kind of a relationship. That is quite an extensive case. I could get it out if we had to look into it, but, there is a definite parallel with the case here where there was a confidential relationship and use of the material.

226 The same way in the Casco case down in New Jersey, the Steam Iron case where someone, a manufacturer, used the material contrary to a confidence and it enabled him to get into manufacture immediately where he wouldn't have known it before.

Now, all of this information that came from Mojonnier to the Brasile people, those companies are now controlled by Lewis. All of that, we say, was wrongfully appropriated and it was continued right along, step by step.

That information is used right along to this present machine. It is the same, one and the same thing.

By the Court: Well, I really don't know what to say to you. Ordinarily, I like to let a lawyer try his case in a way he likes to try it, but, when I hear a patent case, I kind of like to know something about the patent quite thoroughly in the lawsuit. I don't mind a little atmosphere but I don't want so much atmosphere that I can't find the patent.

By Mr. McCanna: I would be glad to accede to your wishes in this, but we finish with our patent evidence
227 and testimony, our patent expert, I would hope to show in our prima facie case at least what the rest of the picture is.

By Mr. Clement: We have no objection to his—

By Mr. McCanna: To show who the infringers are, so far as that is concerned. But, I would be happy to take it up that way.

By the Court: Well, you go ahead. If you can tell me something about the patent so I will know what you are talking about, go ahead. Right now I am wondering, where is that float valve in that device. I want to know something about this thing that you are talking about.

By Mr. McCanna: Well, may I withdraw the witness from the stand, then, and put on our expert, Mr. Fishleigh?

By the Court: Very well.

(Witness withdrawn.)

By Mr. McCanna: Mr. Fishleigh, will you please take the stand?

Could we have a recess, your Honor, please?

228 By the Court: Yes, take a short recess, gentlemen.

Wait. Where is the float valve in this thing I have in my hand, Plaintiff's Exhibit 36 for identification? Is there a float valve in there?

By Mr. McCanna: I beg your pardon?

By the Court: Is there a float valve in there?

By Mr. McCanna: Yes.

By the Court: Where is it?

By Mr. McCanna: It is within the tank.

By the Court: It is in that tank. All right.

(Thereupon a short recess was taken.)

229 By the Court: Proceed.

By Mr. McCanna: I would like to introduce in evidence at this time these two filling machines at my right, the first one being one of plaintiff's machines, which has been marked as Plaintiff's Exhibit 39, and the second one,

the defendants' machine, which we have stipulated, but I wish to have marked as Plaintiff's Exhibit 40.

(Thereupon said models were marked Plaintiff's Exhibits Nos. 39 and 40, respectively, for identification.)

By Mr. Clement: I would like to object to this tank 16, which is not a part of defendants' machine. It has been added for illustration, but it is not a part of our machine as it is sold.

By the Court: That may be so understood.

By Mr. McCanna: I believe we explained that to begin with, and I believe both parties understand that the tanks that are fastened to the top are there only for
230 purposes of illustration if we should want to demonstrate them to contain some liquid as a source of supply, and that when the machines are sold they do not have those upper tanks.

By the Court: Very well.

By Mr. Clement: Your Honor, there is a factor in connection with that. Our machine is used with a pump supply, which makes a considerable difference, so I have reason for objecting to this kind of flow.

I also think that perhaps Mr. McCanna should identify which defendants he is talking about when he identifies this as defendant's machine.

By Mr. McCanna: Well, we say they are all together and they are all liable for this infringement, and that is what we propose to show.

By Mr. Kipnis: If your Honor please, we didn't stipulate that this machine was manufactured by the defendants I represent. We stipulated that this was the accused
231 machine, the machine he charges to be an infringement.

By Mr. Clement: That is correct.

By Mr. Kipnis: And we have no agreement as to the defendants' machine.

By the Court: Very well.

By Mr. McCanna: That stipulation, your Honor, we didn't make any—

By the Court: I understand that, but they are objecting to it being put into evidence as defendants' machine. They say all that was stipulated to is that it is the accused machine. There are two different things. It may be my machine.

By Mr. McCanna: All right. We have it labeled on our chart as the accused machine, and I stand corrected on that.

By the Court: Very well.

(Said models, so offered and received in evidence, were marked respectively Plaintiff's Exhibits Nos. 39 and 40.)

By Mr. McCanna: Mr. Fishleigh has been called rather hurriedly here. He will have his papers together in
232 just a minute, your Honor.

By the Court: All right. Weren't you ready?

By Mr. McCanna: We didn't expect it until tomorrow.

By the Court: Just say yes or no, that is all. Take some more time.

By Mr. McCanna: Just a few minutes, please.

By the Court: All right. Take your time.

CLARENCE T. FISHLEIGH, called as a witness on behalf of the Plaintiff herein, having been first duly sworn, was examined and testified as follows:

Direct Examination by Mr. McCanna.

Q. Will you please state your full name?

A. Clarence T. Fishleigh.

Q. And your age?

A. 59.

Q. Your residence?

A. I live in Deerfield, Illinois.

Q. And what is your occupation?

233 A. I am a consulting engineer, registered as a professional mechanical engineer in the States of Illinois, Michigan, Ohio, New York and others.

Q. Where is your office?

A. Here in Chicago, in the Engineering Building at Wells and Wacker.

Q. Will you please state what education and experience you have had which would qualify you to advise the Court in connection with mechanical and engineering matters, particularly such matters as are involved in this patent suit?

A. After graduating from the Lakeview High School, here in Chicago, in 1913, I went immediately to the University of Michigan, where I spent four years in the College of Engineering.

In 1917 I was graduated from the University of Michigan, from the College of Engineering, with the degree of Bachelor of Science in electrical engineering, just in time to get into the first World War.

I spent two years as an aerial observer and bomber in that war.

In 1919 I went with the Ford Motor Company. At
234 first I worked on regular production operations and was given the opportunity to work for a short time on a number of different operations in different parts of the factory.

Later I was assigned to a number of experimental engineering and research projects. My duties in connection with both of these types of work carried me regularly and extensively into many of the departments of the Ford Motor Company.

I left Ford Motor Company late in 1922, and went with the American Car & Foundry Company, in their division making automobile valves. At first I was in charge of their engineering testing department. Later I became, in addition to that, assistant production manager.

235 By Mr. Clement: Excuse me. We would be willing to stipulate Mr. Fishleigh's qualifications, if he wants to put them in the record in written form to save time.

By the Court: It is wholly immaterial to me. I have heard them before. I am glad to hear them again.

By Mr. McCanna: Well, I believe, your Honor, that there is some poetic license—

By the Court: I take it you want them in the record. Put them in any way you want.

By Mr. McCanna: I would like to have it. I will stipulate to that.

By the Court: Get them in any way you want.

By Mr. McCanna: Then we will furnish the reporter the remainder of the qualifications.

(The further qualifications of Mr. Fishleigh, as furnished by counsel, are as follows:

"I left the American Car and Foundry Company about the middle of 1924, and established a small manufac-
236 turing company of my own, here in Chicago, manufacturing a line of food products. I stayed with that until 1930, at which time I became associated with my brother, Walter T. Fishleigh, to practice as consulting engineers. That association continued until the spring of 1947 when he died. I carried on the work after his death, and I am still continuing it.

"In the course of the last twenty years, I have done two general types of work. The first was a general consulting

business along mechanical and automotive engineering lines, with particular reference to the development or engineering of new products. Also, I have done considerable work in connection with engineering or expert testimony in many patent suits.

"Part of the time I cooperated in working out the general outline and development of the engineering testimony to be given. Most of the time I had complete charge of the preparation of all charts and models, and generally supervised any engineering tests which were required. I have tested many types of equipment in the field and in
the laboratories of such schools as the University of
237 Michigan, New York University, University of Detroit, Case School of Applied Science in Cleveland, and the Illinois Institute of Technology, as well as in the laboratories of many large and small industrial plants.

"It was my privilege to be present in connection with the expert testimony in patent cases in the Federal courts in many different cities, such as Baltimore, Detroit, Chicago, St. Louis and Denver. It has been my privilege to give engineering testimony in several U. S. District courts, including those in Detroit, Chicago, Philadelphia and New York.

"During the last twenty years I have had occasion to study many patents and the file wrappers and contents of such patents. Particularly I have had occasion to consider the mechanical elements of the claims of such patents, to determine the types of structures defined by such mechanical elements, and to consider the scope of the language of such mechanical elements in the light of the
Patent Office proceedings, and the prior art con-
238 sidered by the Patent Office, as well as that submitted by the defendant in subsequent litigation.

"I have done consulting engineering or patent work for many individuals and small companies, as well as for some large corporations such as the Sunbeam Corporation, Linde Air Products Co., Chrysler Corporation, Ford Motor Company, International Harvester Company and many others.

"I am a member of the National Society of Professional Engineers, the Michigan and Ohio and Illinois Societies of Professional Engineers, The American Society of Mechanical Engineers, The Society of Automotive Engineers, The Engineering Society of Detroit, and Western Society of Engineers.")

239 By Mr. McCanna:

Q. Now, Mr. Fishleigh, what experience, if any, have you had with structures and engineering problems such as are involved in the filling machines with which we are concerned in this patent suit?

A. Well, I have been generally familiar with the structure and operation of filling machines since I was in the food business in the late 20's, between 1924 and 1930.

I studied and familiarized myself with a considerable number of filling machines between 1930 and 1950 in connection with patent litigations involving can machinery, bottle capping, and so forth.

I have studied the Mojonnier patent in suit, the file wrapper and contents of that patent, including the prior art patents cited therein, the twelve prior art patents to be relied upon here by defendants, and also most of the approximately seventy-five prior art patents cited by defendants at various times in connection with this litigation.

I have examined and operated a filler made substantially in accordance with the Mojonnier patent
240 in suit, the patent drawings, several of plaintiff's commercial fillers and one of defendants' fillers, or rather the accused filler here in court.

I have also seen several of plaintiff's fillers operating in various commercial installations at various parts of Chicago.

Q. Will you please turn to the Mojonnier patent in suit, reissue number 23,830, and explain to the Court in detail the structure and functioning of the filling machine there disclosed.

A. In order to help clarify my answer to that question, I have prepared enlarged colored diagrams or enlarged colored photostats of the drawings of the four sheets of the Mojonnier reissue patent 23,830, which are on the easel and have been marked as Plaintiff's Exhibits 41-A to 41-D inclusive.

(Thereupon said charts were marked respectively Plaintiff's Exhibits 41-A to 41-D, inclusive, for identification.)

By the Witness:

A. The Mojonnier patent is for a filling machine or dispensing mechanism with time controlled flow. Perhaps best shown in Figure 3, which appears on
241 Plaintiff's Exhibit 41-B, is a cross-section of the filling mechanism.

In Figure 2, on Plaintiff's Exhibit 41-A, is a general outline of the exterior parts.

The Mojonnier patent deals first with the problem of filling a fluid contained in a large tank or container or other source of fluid supply 16, in the upper righthand corner of Figure 2, which is colored gold on these colored drawings.

While shown in fragmentary portion only, normally that tank would either be a tank of some substantial size, very large compared with any of the six tanks on the exhibits here in court, or in the alternative might be a continuous supply of fluid from some source such as a cooler as pasteurizer, or something of that sort—at least, a very substantial supply source.

The object is to get that fluid accurately into a container, as indicated diagrammatically at 13, in the lower left of Figure 2, underneath the blue spout 43.

In order to accomplish that, Mojonnier provided an intermediate tank, which we have colored yellow, and which is marked in the patent drawings with the
242 numeral 14. It is that tank which is shown in enlarged cross-section in Figure 3 on Plaintiff's Exhibit 41-B.
243 The two tanks are connected by a pipe marked 21 in Figure 2, and colored dark yellow on our drawings. As shown in Figure 3, that pipe 21 connects with a tube 27 extending down about two-thirds of the way down toward the bottom in the tank 14, that is, the intermediate or so-called fluid supply container 14.

A float valve is provided, identified by the numeral 24 in Figure 3, and colored brown. That is the float itself. The valve member, which it controls, we have colored green, and is marked 26. The arrangement is such that when the fluid is at the desired level, the float will hold the disc 26 up against the bottom of the tube 27 and stop any flow which might otherwise occur from the large main tank or main source 16 through the pipe 21 and the tube 27 into the intermediate fluid supply container 14.

If the level of the fluid drops slightly in the tank 14, the float will drop, the valve disc 26 will drop from the bottom of the pipe or tube 27, and fluid will be permitted to flow into the valve or into the tank 14 to bring the fluid level back to the desired point.

244 In the particular preferred form, as shown in Figure 3, there is a rack designated generally by the numeral 38, consisting of a ring 39, supported on legs 41 so as to limit

the amount that the float can drop down. In other words, maintained in, shall we say, an operating position so that if the tank 14 is completely drained, the float will nevertheless remain in position to operate as soon as the level is brought back to substantially the level 11 as indicated in this Figure 3 on Plaintiff's Exhibit 41-B.

The tank 14 or fluid supply container has what the patent describes as a bottom delivery outlet. That is formed by the boss 47 at the bottom lower left, which is also colored yellow, and then a member 43 is formed below that, as shown in this preferred form, detachably mounted, and in the bottom of that member 43 is an opening 44, which is referred to in the patent as a fixed or constant orifice. That orifice 44 is closed by means of a ball valve 46, which we have here colored red.

In this preferred form, the ball valve is operated by means of a solenoid, numbered generally by the number 54, and colored violet in our drawings. That solenoid is mounted on the cover 23 for the tank or fluid supply
245 container 14.

A rod 62 runs through the tank, is fastened rigidly or securely to the ball valve at the bottom, and connected to the armature of the solenoid 58 at the top. We have colored this rod connecting the solenoid and the ball valve with a purple color.

246 Then there is a timer, said in the patent to be a timer, that is, the preferred form, a timer in accordance with a circular of the Photoswitch Company numbered, I believe it was, 478, or something of that sort—

By Mr. McCanna: That is correct.

By the Witness:

A. Yes, PC 478 which is an electronic type of timer. As shown diagrammatically on Figure 2 on Plaintiff's Exhibit 41-A, there is a switch 71 connected by means of the cable 72 to the timer 66, that switch being placed in a position so that when the carton 13 or container 13 is placed in position under the valve 46, the switch will be actuated and the cycle of the timer will be initiated. The timer is, in turn, connected by means of the wires or cable 65 to the solenoid.

Referring to the physical exhibit which has been marked as Plaintiff's Exhibit 37, we have a commercial structure manufactured by Mojonnier-Dawson Company, which conforms very closely to the showing in the patent drawings. In fact, I believe it conforms exactly to that showing.

I should say, of course, as has been pointed out
247 previously, and as I had intended to say, that the container 16, which we have marked here, is not normally a part of the structure in this particular form. We have put it on here because at a later point I hope to demonstrate the structure, the operation of the structure, to your Honor.

But this particular tank would not be here. A much larger tank normally or other source of supply, such as shown at 16 in the patent drawings, would be available.

In any event, the fluid would be brought from the source of supply, a tank 16 of some form, through a pipe 21 to the container 14, as marked on this exhibit.

As shown in the drawings, in this particular structure (indicating physical exhibit) the solenoid is mounted in a casing which is an integral part of the cover for the container 14. The cover is marked 23. Your Honor will note that there is a tube 27 corresponding to the tube 27 in the drawings, which goes down from the opening in the cover down to a point toward the bottom of the tank.

Now the float valve—there is one in the tank, but in
248 order to have it a little more readily accessible, we have this model—the float valve is a cylindrical type of valve with a tubular member through the center, and so organized that it will telescope upon the tube 27 and move up and down in the tank, up and down as the liquid level varies, if it does vary.

At the bottom of that float is a little member which we have marked as 26, and the float raises that against the bottom of the tube 27 to stop the flow, and when the float drops, it permits that little disc 26 to be lowered and open the bottom of the tube 27 and permit the fluid to flow in.

249 I have also shown the small rack. The movement is perhaps something like I am now indicating, at least as shown in the patent. The float could move perhaps an inch or so, and then be held in operative position ready for the next operation.

I have also brought an additional sample of the discharge nozzle 43 and the little ball valve member with the connecting rod and the solenoid armature. Simply, as the solenoid is energized, the ball valve is raised, opening the fixed orifice, permitting the liquid to flow out. When the solenoid is deenergized by force of gravity, the valve with its attendant connected armature and rod drops back into position. In this instance the valve operates to closed position by gravity. That is, to open it, it is raised against the

force of gravity and drops back by gravity when the solenoid is deenergized.

There are a couple of alternate forms shown, which I perhaps should point out in passing.

In Figure 5, an alternate structure is shown, in which a solenoid controlled valve is used to regulate the flow from the main source of fluid 16, or which is called 86 in Figure 5, into the supply tank which we have been talking about, or supply container 14, but which is marked
250 75 in Figure 5. That solenoid valve is marked 83 in this Figure 5 on Plaintiff's Exhibit 41-C, and we have colored it green.

In this form two rods, electric contacts 77 and 78, project down into the tank, into the fluid container 75, and are so connected that when the liquid drops below the level of 77, so as to break contact at that point, the valve 83 is opened; and when the level of the liquid reaches the bottom of 78, the valve is closed.

The patent points out that while these two contacts are shown for purposes of illustration at some considerable distance apart, so as to make it clear that there is a difference in level, that in actual practice the bottom of 78 would be very close to the bottom of 77 so as to maintain a quite accurate level in the tank 75.

In this situation also there is a different type of valve shown, which I believe the patent refers to as a molasses type gate valve. In other words, the bottom of the tube 87, which is colored blue, is open, and the valve 95 is pivoted about an unnumbered point at the top of the red portion so that it will swing back and forth this way. As it does, the gate portion of the valve, as I am
251 indicating with my hands, will open the passage through the valve.

In this case, too, there is a solenoid marked 88, which is mounted underneath the container in this instance, and connected with the gate valve by means of a rod 91, which we have colored purple.

In Figure 7 there is what might be called a composite of the showings in Figures 3 and 5, in that in Figure 7 we have a valve, a solenoid controlled valve 131, but in this instance it is controlled by a float member 132. That float member in turn controls a switch or contact 139 at the top of the tank, and with suitable connections over to the valve.

252 Figure 6 is quite similar in all its details to Figure 3 with this exception, that the patent points out that at

the end of a run, it may be particularly desirable to have a minimum of liquid left in the tank, that is, after the last of the liquid has come from 16 into the container 14. Consequently they shorten the legs of the rack 38, lengthen the tube 27, and have the end of the tube 27 close to the bottom of the tank, the bottom of the valve member corresponding to 26 close to the bottom of the tank so that, as we can see from these pictures, when the liquid is exhausted from the container 16, there will be much less liquid left in the intermediate supply container under the situation of Figure 6 than in the situation of Figure 3.

Now this is an exceedingly simple device, its simplicity being one of its virtues. In my judgment it reminds me of the situation that we sometimes hear the attorneys speak of in connection with briefs. I have often heard them say that they didn't have time or didn't have the ability to write a short brief, so they had a quite long brief.

253 That has been the situation in this art. The structures which preceded it were quite extensive, quite involved. But this was the simplest and the first one.

While looking backwards, it is one of those things that very readily can be said, particularly by people out of the art, how simple it was; anyone would have known it. Still, the trend of the art is to the complicated all the way through, and this is the first showing in the art of a fully successful, an accurate, simple, reasonably-priced machine for filling this type of fluid.

I think unless you have some question that would cover it.

By Mr. McCanna:

Q. Did you wish to make some explanation as to the patent itself, any passages from the patent?

A. The patent reminds me that perhaps I have not made it as clear as I should that this device depends upon what is quickly referred to as a timed orifice flow.

What is meant there is that by maintaining a very accurate level, accurate hydrostatic head in the tank, and by having an orifice which has a fixed area, that when

254 the valve is open, that the flow per unit of time will be the same over any given unit of time. So that then if we wish to have a given volume, we can determine exactly how long it takes to get that much liquid.

Now there are two or three things involved. First, to get that sort of thing, we have a reasonably true orifice. In order to have orifice flow, we cannot have any great

obstructions above the orifice which would restrict the flow nor any particular obstructions below the orifice which would restrict the flow.

That is the situation that we have here. When the switch 71 is operated, the timing device is started. It operates electronically for a given length of time, and then shuts off, holding the valve open during the time that the timer operates and the solenoid is energized.

255 Now this type of timer can be very easily adjusted. By changing the value of the potentiometer, adjusting the potentiometer, it can be changed over a wide range. Some of them have two or three adjustments so that you can get a wide adjustment to start with and then by another easy adjustment you can get a finer control.

So that if one is filling quarts on this machine and wishes to change to pints, you don't touch the inside of the device at all. You simply adjust the control on the timer, on the outside, and in a matter of seconds you can switch the device accurately and sanitarily from quarts to pints to half pints or any other figure you want.

Your Honor will see, I am sure, when we consider the prior art that has been cited in this case, how far that is from the situation that was involved in most of the adjustable means that preceded it.

Q. Now, Mr. Fishleigh, have you studied the mechanical elements of the claims in suit of the Mojonnier patent, Reissue 23,830?

A. Yes, I have.

Q. Then will you please explain the mechanical
256 elements of Claim 1 of this reissue patent, pointing out wherein these mechanical elements are present in the structure shown in the drawings of the Mojonnier patent?

If you have prepared any chart or diagram which will shorten or clarify your answer, please feel free to use them.

A. Yes, sir.

By Mr. McCanna: If counsel please, rather than interrupt in introducing these charts, I prefer to introduce them all at the end, and number them just as Mr. Fishleigh has numbered them.

By the Witness: I have prepared a chart which has been placed on the easel and marked for identification as Plaintiff's Exhibit No. 42.

(Thereupon said chart was marked Plaintiff's Exhibit No. 42 for identification.)

By the Witness: Claim 1 of the Mojonnier patent Reissue 23,830, has been broken down into its various mechanical elements and listed in the separate blocks at the
257 right of this chart, Plaintiff's Exhibit 42.

Claim 1 of this reissue patent is identical with Claim 1 of the original Mojonnier patent.

The introduction,

"In a dispensing mechanism, the combination of"

element 1

"a fluid container,"

that element is the dispensing container 14, colored light yellow, as pointed out by the lead line, and that is the container which we have referred to previously in this connection.

The second element,

"means for supplying fluid to said container,"

that element is the main liquid supply tank 16 and the conduit 21, which we have colored dark yellow. Perhaps I should have included in that element the tube 27, the part that continues down into the tank, although I had assumed that that would be included as a part, perhaps, of conduit 21.

The next element,

258 "means in said container operable to maintain the fluid in the container at a preselected level,"

that is the float valve means referred to generally by the numeral 17, and that includes the float member 24, which we have colored brown, and the valve member 26, which we have colored green.

259 The fourth element

"* * * a valve mounted on the container for dispensing fluid from the container into a receptacle,"

that is the ball valve 46 colored red, cooperating of course with the discharge nozzle 43.

The fifth element

"a solenoid mounted on said container for operating said valve,"

that is the solenoid unit 54, which we have colored violet, and in this preferred form is mounted actually on the cover of the container, but on the top of the container.

"a member extending through said container for interconnecting said solenoid and said [illegible],"

That is the rod 62, colored purple, which we have described, and which extends from the red ball valve 46 at the bottom

through the tank to the solenoid at the top of the container 14.

"an interval timer for controlling the energization of the solenoid and"

That is the adjustable timer 66.

One other point about this type of timer that I should
260 call your Honor's attention to, the reset time on this type of timer is a very short period and a relatively fixed time. It varies perhaps a little bit if we are operating at the longest cycle as against the shortest, but relatively very short, a matter which we would measure in a couple of seconds perhaps.

So that as we adjust this timer, that is, adjust the duration of the valve opening for the fluid flow with that timer, we also adjust the overall cycle of the timer. In other words, by way of illustration, supposing we said that it was going to take 10 seconds to fill a given container. Perhaps the total would be something like 12 seconds so that, allowing merely for the operating time in a cycle, you could put five of them through in a minute, if my figures were correct.

If we changed that to, say that happened to be quarts, just for purposes of illustration, if we changed it to half the volume, it would take about half as long to do it. We would cut the operating time, say, to five, we would leave the reset about the same, and the total would be seven as against the previous 12. So that it appears very defi-
261 nitely that we could fill a lot more pints than we could quarts.

Now we in the art run into certain adjustable devices where they were operated by cams, in which the duration of the valve opening could be changed, but the complete cycle remained constant. So that while you could change it so as to fill pints instead of quarts by making certain fairly complicated adjustments and replacing certain cams, there was no provision for complete change in the overall cycle.

The last element

"means to actuate said timer to energize said solenoid and thereby move said member to open said valve, whereby a substantially constant volume of liquid is dispensed each time said solenoid is energized."

The specific element to which that refers is the starting switch 71, but the functional statement there takes cognizance of the fact that with this device we have a fixed

relatively constant hydrostatic head from the level 11 to the valve orifice 44, that we have in the discharge
262 nozzle an orifice of a fixed or constant size, and that we have a timer which controls quite accurately the length of time that the valve is open.

In addition to that, of course, we should note that with this solenoid operated valve, we have what might be called a snap acting valve. That is, the valve opens quickly and rapidly to full open position, is held at full open position, and then at the end of the operating period it is released and drops back rapidly to fully closed position, practically having no intermediate time at all. It is either full open or full closed, as far as any practical operation is concerned.

263 Q. Mr. Fishleigh, will you now please explain the mechanical elements of Claim 6 of the Mojonnier reissue patent, pointing out wherein these mechanical elements are present in the structure shown in the drawings of the Mojonnier patent.

A. I have prepared a chart showing the mechanical elements of Claim 6 of the Mojonnier reissue patent, which has been placed on the easel, and marked for identification Plaintiff's Exhibit 43.

(Thereupon said chart was marked Plaintiff's Exhibit No. 43 for identification.)

By the Witness:

A. The introduction to Claim 6 calls for

"a filling machine for delivering an accurately controlled predetermined quantity of milk and other free flowing fluids for the repetitive filling of individual milk containers and the like each in a single complete operation, the combination of"

first,

"a relatively large main fluid supply tank;"

264 that is the main liquid supply tank 16 which, as I have pointed out, would normally be quite sizable.

I have seen some of those tanks operating. The smallest that I ever saw in operation was on a job putting oil into the transmission of an automatic washing machine, in which I would say the tank was probably six or seven feet high and perhaps four or five feet in diameter.

By Mr. McCanna:

Q. Was that the equipment at the Hotpoint Company?

A. Yes, that is at the Hotpoint Company out in, I guess it is in Cicero, is it, or in Chicago?

Q. Berwyn.

A. Oh, yes.

The second element

"a fluid supply container having a fluid capacity substantially smaller than said main supply tank and larger than the quantity to be delivered in filling said individual containers;"

that bears out what I have been saying, that this fluid supply container 14, the dispensing container 14, colored light yellow, is considerably larger than the carton or container to be filled, that is, the carton or container
265 13 but, although not shown so in the drawing, would be substantially smaller than the supply tank 16.

There is one additional point in connection with this arrangement that should be pointed out, and that is that with an arrangement such as shown in Figure 3, the effective hydrostatic head which operates upon the orifice 44 is relatively low, as shown if we check these sizes in the drawing against the size in the tank. In fact in the tank or in the machine, Plaintiff's Exhibit 37, that head is a matter of something in the neighborhood of eleven inches.

266 And your Honor will see at a glance that with such an arrangement as this, we are able to maintain that hydrostatic head much lower than we would if we simply came out and tried to put a valve of some sort on the bottom of a big container, in a big main container, and that has a definite advantage, both in the matter of facilitating flow, making a slower flow, permitting a large orifice and a slower flow, to get the same quantity of material, but also it is quite advantageous from the standpoint of splash and foam effect which we would get. We would get less. We would get a much more advantageous result with the low hydrostatic head, using this intermediate dispensing container than we would if we connect it to a large tank.

The third element:

"a bottom delivery outlet having a given orifice factor and area of orifice, through which outlet orifice the fluid freely flows by gravity;"

That is the discharge nozzle 43 (colored blue) having opening 44.

A fourth element:

267 "a valve in said bottom outlet operable between an open position in which the fluid flows for delivery into

an individual container positioned beneath and in filling coaction with said outlet and a closed position for stopping said flow"

That, of course, is a ball valve, 46.

Then the fifth element:

"means operable to deliver said fluid from said main tank to said fluid supply container and to maintain a substantially constant preselected hydrostatic head of the fluid in said supply container, said hydrostatic head having a predetermined value with relation to said orifice factor and area of orifice whereby to effect controlled relatively rapid continuous flow of the fluid from the supply container when the latter is in said filling position;"

The specific element for bringing the fluid from the main supply tank, 16, to the dispensing container 14, 268 is conduit 21 and tubular member 27 and the float valve means 17.

They are there, in this instance, as I have pointed out, for the very specific purpose of maintaining a preselected, constant hydrostatic head above the valve orifice and not merely to prevent overflow of the tank or to limit the amount of liquid which might run into the tank, which is the situation in the toilet tanks controlled by float valves which have been referred to previously here. A float valve, it is true, but maintaining a hydrostatic head of liquid with an entirely different idea in mind and having an entirely different purpose and obtaining an entirely different result.

The sixth, seventh, eighth and ninth elements, as I have them here, call for:

"a timer for controlling the operation of said valve,

"said timer having a starting switch and operating to control the continuous uninterrupted time period in response to the initial actuation of said switch,

269 "said timer controlling said valve to continuously hold open said valve throughout said time period whereby to deliver said predetermined flow and quantity of fluid in a single complete operation to each said individual container and whereby the preselected constant factors of said hydrostatic head in the supply container and said orifice delivery produce relatively rapid filling of said individual container and control of splash effect of the fluid in its discharge into the said individual container,

"said timer being adjustable to vary said time period

and the predetermined quantity of fluid delivered to each individual container."

Those elements, as I have indicated them, find a response in the adjustable timer, 66, colored orange, having starting switch 71.

270 Q. Mr. Fishleigh, will you please explain the mechanical elements of Claim 7 with the Mojonnier patent, pointing out wherein these mechanical elements are present in the structure shown in the drawings of the Mojonnier patent?

A. 43 was the last one, was it not?

Q. 44.

A. I have prepared a similar chart showing the mechanical elements of Claim 7 of the Mojonnier reissue patent 23,830, which is on the easel and I have marked this Plaintiff's Exhibit 44.

This chart has been prepared in the same general manner as the previous ones, with the various mechanical elements in the block at the right, the notation to the left of that block indicating the responses as I see them in the drawings of the Mojonnier patent and the lead lines pointing out in those drawings, which appear to the left, the responses as I see them.

(Thereupon the chart was marked Plaintiff's Exhibit No. 44 for identification.)

By the Witness:

A. The introduction to Claim 7 is identical with the
271 introduction to Claim 6.

The first element:

"a large source of fluid"

that is the large source of fluid in the main liquid supply tank 16, colored gold.

"a fluid supply container having a fluid capacity substantially smaller than said source and larger than the quantity to be delivered in filling said individual containers,"

that again is the dispensing container 14, colored yellow, light yellow.

"a fluid delivery line interconnecting said source and said supply container,"

That is the conduit 21, including the tube 27 inside the fluid supply container.

In other words, it comes down 21 and straight on down into the interior of the container 14.

The Fourth element:

"a valve operable to control the flow of fluid through said fluid delivery line into said supply container, the supply container being divided with . . ."

that is the valve disc 26, colored green, at the bottom 272 of the tube 27.

The fifth element:

"a bottom delivery outlet having a given orifice factor and area of orifice through which outlet orifice the fluid freely flows by gravity."

That is the discharge nozzle 43, colored blue, having opening 44, as we have previously indicated.

"a valve in said outlet operable between an open position in which the fluid flows for delivery into an individual container located beneath said supply container and a closed position for stopping said flow."

That is the ball valve 46 and it is pointed out here, as I indicated previously, that with this solenoid action, we get a full open or a full closed position of the valve with substantially no intermediate position at all and that is of considerable importance in regulating the time orifice control device of this type.

The seventh element:

"a float in said supply container operable to control
273 the first mentioned valve to replace the fluid in said supply container as it is dispensed and also operable to maintain the fluid in the supply container at a preselected level and providing a hydrostatic head of predetermined value with relation to said orifice factor and area of orifice whereby to effect controlled relatively rapid continuous flow of the fluid from the supply container to said individual container when the second mentioned valve is held open."

That float, of course, is the float 24 which we have colored brown. The first mentioned valve which it controls, is the value 26, and, of course, the second mentioned valve spoken of at the end of that element is the valve No. 46, colored red.

The eighth element:

"a solenoid for operating said second mentioned valve" and that is the solenoid unit 54, colored violet, mounted upon the cover of the container.

The ninth element:

"operating means interconnecting said second men-
274 tioned valve and said solenoid, and"

That is the rod 62 which is in this preferred embodiment which extends to the tank from the ball valve, through the discharge nozzle to the solenoid.

275 And the last element:

"an interval timer for controlling the energization of said solenoid to continuously hold open said second mentioned valve for a preselected time period to control a continuous uninterrupted flow delivery of the fluid to said individual container whereby the preselected constant factors of said hydrostatic head in the supply container and said orifice delivery produce relatively rapid filling of said individual container and control of splash effect of the fluid in its discharge into said individual container, said timer being adjustable to vary said time period and the predetermined quantity of fluid delivered to each individual container."

That element refers to the adjustable timer 66, colored orange, having the starting switch 71.

Q. Mr. Fishleigh, are you familiar with the structure and operation of any of the Mojonnier commercial filling machines?

276 A. Yes, I am. In fact,—

Q. And are you also—

A. (Continuing.) In fact, the machine, Plaintiff's Exhibit 37.

Q. Are you also familiar with their Model CP?

A. Yes, I am. I was just saying that that model or exhibit, Plaintiff's Exhibit 37, is one of the commercial Mojonnier machines. It, as I understand, was one of the earlier ones but it is still a commercial model.

Q. Yes. Now, then, will you please explain the structure and functioning of the Mojonnier Model CP commercial filling machine?

I believe this model is marked Plaintiff's Exhibit 39.

A. I have prepared colored drawings of one of plaintiff's commercial filling machines, their Model CP, which have been put on the easel and are being marked for identification as Plaintiff's Exhibits 45-A, 45-B and 45-C, respectively.

(Thereupon said documents were marked respectively Plaintiff's Exhibits 45-A, 45-B and 45-C for identification.)

277 By the Witness:

A. The plaintiff's commercial model CP is very similar to the structure shown in the patent, differing only in minor details.

It is contemplated that the Model CP shall be used with a main fluid supply tank 16, as shown on 45-B and which we have colored gold on these drawings.

There is also a conduit 21 connecting that main fluid supply source with a fluid dispensing container, an intermediate container which we have marked 14 and which is shown in section on the drawing, Plaintiff's Exhibit 45-C.

There is also a solenoid or coil case number 54 and mounted at the upper portion of the tank, mounted upon the cover 23 of the tank.

In this instance, however, the solenoid and its case can be moved up and disconnected from the cover.

T[illegible]t is shown particularly well in the second view, Plaintiff's Exhibit 45-C, where the violet portion telescopes on top of a tubular extension or boss on the cover 23, the purpose there being simply that for cleaning purposes,

278 it was expedient to disconnect or remove the solenoid so that the cover could be cleaned or handled without the solenoid and its attaching wires.

The same type of float is used, 24. In fact, they are interchangeable and the same type of valve disc 26. They are also interchangeable.

The same general type of rack for the float 38 is shown—that is, the rack 38 for the float 24.

In this instance, a rack of the shorter legs, such as I showed here with the separate physical exhibit, is indicated.

Likewise, a discharge nozzle 43 is used. It is of a little different character, whereas, with the discharge nozzle shown in the patent and the one used in Plaintiff's Exhibit 37, a threaded nut member similar to the type that we use in a pipe union is used to connect the nozzle to the bottom part of the tank, whereas in this CP model, the nozzle is connected to the tube 47, extending down from the bottom of the container 14 by a so-called bayonet type connnection.

There is, however, a fixed orifice discharge pot 44

279 and a valve member, slightly different in detail, but of the same general character, 46, which we have colored red and likewise connected by means of a rod 62 to the armature 58 of the solenoid 54.

280 In this particular nozzle, there is a discharge opening, as indicated clearly in both Plaintiff's Exhibits 45-B and 45-C, a discharge opening to the side of the nozzle, the purpose of that being to direct the flow against the side of the container which is being filled and that assists further in the elimination of splash and foam.

This particular model also carries a plate, unnumbered, which we will see on the model, for protecting from splash or foam.

That CP model is here in court and has been identified as Plaintiff's Exhibit 39. This Plaintiff's Exhibit 39 has the same type of intermediate fluid container 14 as we had previously.

The supply container 16 which we have here (indicating) for demonstrating purposes and to facilitate operation —which I think we will postpone until tomorrow because we didn't have time to get the converters set up. These machines operate on AC current and they have to shift over from the conventional DC that you have here.

The solenoid in its separate case can be removed from the top of the cover of the container. Inside of the 281 container 14 is the same type of float valve that we had on the previous one.

Well, I was going to take the nozzle off but it simply comes off with the bayonet, and if this plastic protector is removed, it will come right off the bottom of the tank.

On this particular member, we have an additional feature shown which is not actually part of the patent. That is a mechanism here (indicating) to facilitate the opening of the so-called Pure Pak paper cartons.

Down at the bottom is a little different arrangement, a switch control, the same general type of switch but this is so arranged that as the carton is moved up to the operating position so that the nozzle projects down into the carton for the filling of milk, when it gets far enough, it slips over this intermediate shield (indicating) and supplies the container.

Now, at the present time a slightly different type of timer mechanism is used. The one originally used is shown on the patent and on the model, Plaintiff's Exhibit 37. It was the Photoswitch timer. The one now is the one which is made by or for the Mojonnier people 282 themselves, incorporating certain requirements but operating in the same general characteristic way. So

that here (indicating) with the changing of the dial on the front of the unit, the machine can be changed from filling quarts to pints to half pints or half gallons or anything within its range by simply adjusting the timer from one position to the other. It is a very, very simple adjustable mechanism.

Otherwise, I believe that the two machines are substantially identical.

By Mr. McCanna: If your Honor please, should we start into another series?

By the Court: No. We will recess at this time until 10:15 tomorrow morning.

By the Marshal: This honorable court now stands adjourned until 10:00 o'clock tomorrow morning.

By the Court: Here are some papers belonging to you.

(Thereupon, at the hour of 4:30 o'clock p. m. on Wednesday, May 18, 1955, an adjournment was taken in the above-entitled cause to Thursday, May 19, 1955, at the hour of 10:15 o'clock a. m.)

283 IN THE UNITED STATES DISTRICT COURT.

* * (Caption—54-c-277) * *

283 Chicago, Illinois,
Thursday, May 19, 1955,
10:15 o'clock a. m.

Court convened pursuant to adjournment.

Present:

Mr. McCanna,
Mr. McKnight,
Mr. Pillote,
Mr. Allen,
Mr. Clement,
Mr. Voland,
Mr. Houghteling,
Mr. Bernat,
Mr. Kipnis,
And other Counsel.

284 And thereupon the following further proceedings were had herein:

By the Clerk: The case on trial.

By the Court: Good morning.

By Mr. McCanna: Mr. Fishleigh, will you please take the stand.

CLARENCE T. FISHLEIGH, called as a witness on behalf of the Plaintiff herein, having been heretofore duly sworn and examined, resumed the stand and testified further as follows:

Direct Examination (Ctd.) by Mr. McCanna.

Q. Mr. Fishleigh, at the close of the session yesterday you were explaining the plaintiff's commercial Model CP filling machine.

Had you finished that explanation?

A. Well, almost. There is one point that in fairness I should make clear: that is, that the portion of the mechanism at the right of this machine (indicating) has to do with the closing and sealing of the cartons.

It has nothing to do with this patent suit. I would like to have taken it off, but since the machine was being
285 brought in as a commercial model, I thought that it would be improper so to do.

The parts that deal with the patent are the switch, the tanks, the timer, and the discharge nozzle.

I think I pointed out previously that the opening mechanism, the little gadget back here for opening the cartons, is like wise not a part of the patent.

Q. Are you now prepared to demonstrate the operation of Plaintiff's WC 1 machine, that is, Plaintiff's Exhibit 37, which is the one like the drawings in the Mojonnier reissue patent?

A. Yes, I am.

Q. Then please demonstrate it to the Court.

A. This particular machine (indicating Plaintiff's Exhibit 37) is intended and set up for the filling of tin cans of the so-called aerosol bomb type.

Reference has been made to those previously, but perhaps I should explain just in a very few words the procedure in filling aerosol bombs. I know that while I had used them, until I got into this case I didn't fully understand how they operated.

In an aerosol bomb type of spray device, the most

286 common that we know of or that I know of are the insecticide bombs in which a certain amount of insecticide is placed in the tin can, and then what is known as a propellant is put in.

One of the most commonly used propellants is Freon. Now the reason for using Freon is this: Freon is a chemical material which at ordinary temperatures and ordinary pressures, that is room temperature and atmospheric pressure, is a gas. But if it is put under high pressure and room temperature or under atmospheric pressure and low temperature, it becomes a liquid. It is very convenient then to use in this sort of a bomb.

The insecticide is placed in, filling a portion of the can, and then the Freon is placed in. The most common, or at least one very common way of doing it, is to put the Freon in at very low temperature but at atmospheric pressure.

Then the can is sealed with a little cap which includes a spring pressed valve. There is a small tube that runs from that cap down to the bottom of the tin can, and as soon as this can with the Freon and the insecticide
287 has been sealed and brought to room temperature, the Freon, which was put in as a liquid at a low temperature, tends to gasify because it is at room temperature.
288 Since it is confined in the tin can, it develops a considerable pressure, which, I believe I am right in saying, as commercially dispensed is somewhere in the neighborhood of 30 to 40 pounds per square inch in the so-called low pressure type of bombs.

During the war a much higher pressure was used which was not suitable for commerical use because of the danger of the container at that higher pressure. But at 30 or 40 pounds or thereabouts, the device works very well.

So that we have insecticide in the container subjected to the high pressure, and by merely opening the valve with a finger action, we permit that high pressure to force the insecticide out. The nozzle is of an atomizing type, so that we get a spray action, a very simple way to develop a pressure and a very simple way to spread out the insecticide.

In that case it is the same general principle that is used in the whip cream cans which have been talked about except that there, because the material is to be used as food, a different propellant has to be used. I
289 believe they say that nitrous oxide is the propellant which functions in somewhat the same manner, pro-

duces the pressure, and has no detrimental effect upon the food.

One other way in which these bombs are filled is to fill them under pressure, that is, the insecticide or material to be used is placed in the can, the can is sealed, and then with a special filling mechanism a small valve is opened and the propellant is put in under high pressure but at room temperature.

The field has expanded. I have a little can of Three-In-One oil that is built that way so that if I want to lubricate a surface I can do it that way. They put paint up that way and lacquers for lacquering surfaces, a great many—oh, shaving cream is one very well known— a great many different products are handled in this way. It is a very convenient and very desirable and satisfactory packaging method.

This particular cream is set up for filling this type of can (demonstrating). I have simply placed the can underneath the nozzle. In so doing I automatically operate the switch, turn on the timer which opens the valve and
290 permits the constant head maintained in the tank 14, the dispensing tank 14, to cooperate with that valve opening, and cause a very uniform flow of material.

That operation could go on continously as long as fluid was available from the main fluid supply source, which is represented here in this model as 16.

If for some reason I wished to change from the particular quantity that I was filling in this demonstration that I have made so far, in this particular model all I would have to do is to change the adjusting mechanism inside of the device. I think that your Honor will be able to hear from the length of time that it is operating that we get a much shorter duration of fill, and that certainly is true by lifting the cans. The one in my left hand, which I just filled after adjusting the machine, is very much lighter than the one filled as it was originally set up.
291 I believe that is sufficient demonstration of this machine, unless you have some other suggestion.

Q. I would like to have you now demonstrate the operation of the Mojonnier CP machine, Plaintiff's Exhibit 39, I believe.

By Mr. McCanna: In this demonstration, your Honor, we will have the assistance of Mr. Lee, who is an employee of Mojonnier-Dawson Company.

By the Witness: I have asked Mr. Lee to help demonstrate this machine because there is a little bit of knack in this operation in opening these cartons, a knack which I haven't felt justified in taking time to acquire.

Rather than risk any difficulty with the demonstration by failure to open the carton, I am asking Mr. Lee to make the demonstration.

By Mr. Clement: Your Honor, I would like to request that he be sworn so that we can ask him questions on
292 cross examination if we desire to.

By Mr. McCanna: No objection, your Honor.

(Whereupon Lester Lee was duly sworn.)

By the Witness (Mr. Fishleigh): Mr. Lee, if you will just take one of the empty cartons we have on the machine and operate this machine in the conventional manner, opening and filling the carton.

(Mr. Lee illustrates.)

By the Witness: Now, your Honor will note that in this machine that the carton is first opened and then lifted so that the carton surrounds the bottom of the nozzle so that, as I have previously pointed out, in this machine there is an opening at the side of the nozzle so that when the carton is placed up over the nozzle, the material, the liquid comes down through the nozzle and out onto the side of the carton.

I think that is sufficient.

By Mr. McCanna:

Q. Now, Mr. Fishleigh, I call your attention to the specification of the Mojonnier patent reissue
293 23,830 beginning in Column 6 at line 3 and running to line 47.

Will you please explain that paragraph to the Court and comment on it?

By the Court: What page?

By the Witness: Column 6.

By Mr. McCanna: Column 6.

It is the paragraph starting at the top and running through to line 47.

By the Witness:

A. That is the paragraph in which the Mojonnier specifications points out the basic hydraulic principles upon which this Mojonnier filler operates and sets forth the fundamental formula for orifice flow.

It should be noted, of course, that the specification does not say that Mr. Mojonnier invented or discovered this principle. It says, on the contrary, that the equation is one of the first known quantitative relationships in hydraulics and is expressed as follows:—the paragraph goes on to point out that with a fixed or constant head, that the velocity of flow through an orifice is constant, and that
294 if the area and conditions of the orifice are maintained constant, that then the volume dispensed in a given time, dispensed, is dependent upon the time, and with a controlled time, if you can control that, that you get a fixed or definite volume time after time.

I did a little checking to see if this formula was well known. To refresh my recollection, I first referred to one of the books which was cited at one time by one or another of the defendants in this case, the book entitled "Hydraulics" by Hughes and Stafford.

I found that I had a copy of the particular edition that was cited, in my library, but I also had an earlier, unabridged copy dated 1914 which I had used in school and which gave the general formula.

295 But, the significant point of this reference is, so far as we are concerned, that neither of these text books nor the Romans with their aqueducts or any of the twelve patents, prior art patents, relied on by the defendants, nor any of the file wrapper references or any of the 70-odd references cited at one time or another by one or the other of the defendants during the pendency of this case—none of them disclose, nor suggest the combination of elements disclosed by Mojonnier, by his patent, and used in his successful filling machine.

Moreover, none of them disclose or suggest any combination of elements or any mechanism based upon this principle which would be satisfactory for the accurate repetitive production-filling of free flowing fluid as the Mojonnier patented machine.

Q. Now Mr. Fishleigh, have you made a study to determine whether or not the mechanical elements of the claims in suit of the Mojonnier reissue patent are present in the plaintiff's commercial filling machine model CP?

A. Yes, I have.

Q. And what did you find?

A. Each and every one of the mechanical elements
296 of the three claims in suit finds a direct and complete response in the plaintiff's CP machine.

Q. Then will you please explain to the Court wherein the mechanical elements of Claim 1 of the Mojonnier reissue patent are present in plaintiff's commercial filling machine model CP?

A. I have prepared a chart to help clarify the answer to that question, which has been placed on the easel and is being marked for identification as Plaintiff's Exhibit 46.

(Thereupon said chart was marked Plaintiff's Exhibit No. 46 for identification.)

By the Witness:

A. The left-hand portion of the chart, from the line between the mechanical elements and the "yes" and "no" column, from there to the left, is a photostatic reproduction of the chart of the mechanical claims of element 1 which we previously discussed.

The title, the "yes" and "no" column and the material to the right thereof, are new on this chart.

297 The title indicates it is my studied opinion that the mechanical elements of Claim 1 of the Mojonnier patent reissue 23,830 are found in plaintiff's commercial filling machine and the "yeses" in the column headed

"is element found in plaintiff's commercial filling machine"

indicate that I find each of those elements present.

The notes at the right are substantially identical with the notes at the left, which indicate where those elements are present and structure showing the drawings of the patent because the structure of pl.'ntiff's machine, this model that you see, is substantially identical with that shown in the drawings.

I have pointed out, by means of the notes, the colors and the lead lines, the presence of these various mechanical elements and unless you feel it is necessary, I think we need not consider them individually.

Q. Well then, will you please explain wherein the mechanical elements of Claim 6 of the Mojonnier reissue patent are present in plaintiff's commercial filling machine, model CP?

298 A. The chart which I have prepared, to help clarify my answer to that question, has been placed on the easel and marked as Plaintiff's Exhibit 46. This chart has been organized in the same general way as the preceding chart and shows, by way of the "yeses" in the "yes" and "no" column, by means of, by way of the notes at the right there-

of and the lead lines and pictures and color, that, again, each of the mechanical elements of Claim 6 is present, or found in plaintiff's commercial filling machine model CP and of course, since we have indicated previously that this model WC-1, Plaintiff's Exhibit 37, was even more closely like the drawings in the Mojonnier patent, these mechanical elements likewise find response in that model WC-1.

(Thereupon said chart was marked Plaintiff's Exhibit No. 46 for identification, later changed to 47.)

299 Q. Will you please explain wherein the mechanical elements of the Claim 7 of the Mojonnier reissue patent are present in plaintiff's commercial filling machines?

A. My attention is called to the fact that the preceding chart was 46 and that this one should have been numbered 47. With your Honor's permission, I will change that number.

By the Court: The copy I have is 47.

By the Witness: And it was a mistake on my part in putting the number on when the chart was on the easel.

By the Court: Well, the latest one is what, 47?

By the Witness: Yes, sir.

By the Court: It is already so in my hands.

By the Witness: Did you ask me another questiton?

By Mr. McCanna:

Q. Yes. As to Claim 7, applying to plaintiff's commercial filling machines.

A. The chart covering the mechanical elements of Claim 7 and showing wherein they are present in plaintiff's commercial filling machine, Model CP, is marked Plaintiff's Exhibit 48.

300 (Thereupon said chart was marked Plaintiff's Exhibit No. 48, for identification.)

That chart is again organized in the same general way as the two preceding charts.

The yeses indicate that it is my studied opinion that each and everyone of the mechanical elements finds a response in this Model CP, that is, the mechanical elements of Claim 7.

The notes at the right thereof which are substantially identical with the notes at the left, point out wherein those elements are present, and to facilitate that understanding, we have colored the parts and run lead lines to the corresponding parts.

Q. Now, Mr. Fishleigh, are you familiar with defendants' accused filling machine?

A. Yes, I am familiar with the sample or model defendants' or the accused machine, at least, that is here in court.

I am also familiar with a number of drawings which were furnished by the attorneys for some or other of the defendants, representing this accused machine.

Q. Will you please explain the structure and functioning of the defendants' accused filling machine which
301 is the model we have here in court, Plaintiff's Exhibit 40?

A. To asisst me in making such an explanation, I have prepared several colored photostats and a colored—or a non-colored enlargement of a photograph.

These will be placed on the easel and will be marked as Plaintiff's Exhibits 49-A, 49-B, 49-C, 49-D and 49-E respectively.

(Thereupon said documents were marked respectively Plaintiff's Exhibits 49-A, 49-B, 49-C, 49-D and 49-E for identification.)

By the Witness:

A. Exhibits 49-A and 49-B each consist of what I call a main chart and a flat.

The main chart on each of these two exhibits is identical and it is a photostatic reproduction of a drawing, the negative of which was given to me and I understood that it came from Mr. Clement and was also, as I understood, purporting to represent, as the title indicates, the MJ semi-automatic tank assembly.

302 However, a glance at the lower portion of that indicates that there was some confusion, some overlapping as to the operating mechanism for the valve. At least, it did not conform to the showing of the structure which I had available. So in order to make it clear and make it conform to the showing of the structure itself as I have it, I had an overlay made for the bottom part, showing the solenoid and valve operating mechanism as it is on the structure, Plaintiff's Exhibit 40.

Exhibit 49-A shows on the flap or overlay the position of the parts when the valve is closed. That on Exhibit 49-B shows the position when the valve is open.

I pointed out, I believe, or at least it was pointed out, that the tank upon that Exhibit 40 was put on by us to

facilitate a demonstration which we might want to make or tests which we made with the machine in my office.

The mechanism as it came to us stopped, I believe, at the union to which I am now pointing (indicating) just at the back of the tank which we have marked 14 and the part above that we have added.

I heard some comment yesterday to the effect that
303 such an addition was not justified. But I point out to your Honor that on these two drawings which were furnished as representative of the structure of this accused machine that there was a portion in the upper right of the lower view of the tank, which we have colored gold, and which clearly represents almost an exact copy, in fact, of the showing of the main fluid tank in the patent drawings.

To me, as an engineer, that clearly represented a fragmental showing of a tank. In view of that, I feel that we were perfectly justified in putting a tank such as the tank 16, which we have added to that machine, to represent the operating conditions.

I perhaps should explain what the other drawings are. Exhibit 49-C is a photostatic enlargement from another negative which was furnished by one of the attorneys for one or more of the defendants. It is a perspective showing of a device certainly very similar to, although differing in some minute details, from the sample, Plaintiff's Exhibit 40.

We added the title at the top "Defendants' Accused Filling Machine, Model MJ, Semi-Auto."

304 We got the justification for that from some stamping on the legs of the machine, Plaintiff's Exhibit 40, which said "MJSA," and we were advised that that is what that meant, semi-automatic.

305 Plaintiff's Exhibit 49-D is a photostatic enlargement of another photostatic negative furnished us, a negative of a photograph or appearing to be a photograph of another machine of this same general character.

Exhibit 49-E is a photostatic enlargement of the drawing marked Part No. 7-F of the valve lever from the MJ semi-auto machine. In fact, there is where we got the detail of the designation on another print which came from one of the defendants' attorneys.

The structure of the defendants' machine is shown in Exhibit 49-A and 49-B.

If we look at the lower figure, the cross-section of the tank, we see in the upper right the portion which I have colored gold, and which clearly represents a main source of fluid, a main fluid supply tank, with the pipe leading down therefrom, which I have colored dark yellow, and leading to a connection with the tank itself, or rather with a boss upon that tank.

At that point there is a member marked 558-12, which we have colored green, and which is a valve so arranged as to control the flow of fluid from the tank shown in gold 306 to another tank marked 558-25, and which is colored in outline and in the upper portion light yellow.

The valve 558-12 then controls the flow into the tank, the intermediate tank from the gold tank up above. That valve is under the control of a float member which we have colored brown, and is marked on this drawing 558-9.

That float member is carried by an arm 558-8 and pivoted up at the point 558-6 to a bracket upon the tank 558-25. Through the bell crank arrangement, that movement of that float will move the valve to the left or to the right, depending upon whether or not the float member moves up or down.

So that it is quite clear from the drawing, and proves to be true when the machine is operated, that we have here a float member controlling a valve member 558-12 for controlling the level of the liquid in the tank, the fluid supply container 558-25.

It might be of interest to note that here, too, the dark yellow conduit leading from the main fluid supply source leads down inside of the container to a discharge point below the normal level of the liquid in the container 307 so as to avoid any foaming or splashing effect at that point.

Of course, it is true that with a device of this sort, we could use not only a main fluid supply tank, such as shown on this drawing, but some other source of supply so long as it was a fairly continuous source which would replace the liquid, supply liquid to the container 558-25 whenever the valve was open, that is the valve 558-12, when the liquid level drops slightly below its normal position.

In the bottom of the container is a fluid outlet, a discharge outlet, in this form, and with a sleeve marked 558-15, and colored light yellow, extending down below.

There is another sleeve marked 558-16, which we have colored blue, and which is so organized that it may tele-

scope upon the member 558-15 and be moved up or down upon that yellow sleeve.

308 In the bottom of that dark blue member is an opening, which we have marked 44, and a small baffle, unnumbered, but shown in dark blue immediately below the opening or orifice in that member 558-16, which directs the fluid flow when the valve is opened to one side or the other.

Then there is a valve member which we have marked 558-20 and have colored red, which in the valve closed position, as shown on Exhibit 49-A, closes the opening 44 in the bottom of the sleeve or discharge nozzle 558-16.

That valve is opened and closed in the manner which I will explain shortly by means of a solenoid colored violet, which is mounted upon the same supporting post that the intermediate tank 558-25 is mounted upon.

Then there is a lever marked 7-F, which is the same lever shown in greater detail on Plaintiff's Exhibit 49-E, which controls the operation of the sleeve 558-16, and hence the opening and closing of the valve.

There is a timer which came with the machine. It is not shown on the two drawings, Exhibits 49-A and 49-B, but is shown rather clearly in Exhibit 49-C, whe e
309 we have colored it orange, and shown likewise in the reproduction of the photograph, Plaintiff's Exhibit 49-D, and is there marked a timer.

There is a switch, which we have marked 71, down below the valve, the discharge valve, and behind it, approximately in the place or very close to the place that is shown in the Mojonnier patent. But in this particular model, at least, it is so organized that it is not actuated by the carton itself but must be actuated up through the little unnumbered lever arm shown in 49-A and -B. That is actuated manually when the carton is in position under the filling nozzle.

Returning for the moment to the discharge nozzle and valve, I want to point out that this differs in detailed operation from the valve of Mojonnier. In this instance, instead of having to raise the carton so that the carton surrounds the valve, as we saw in the Mojonnier CP machine, a somewhat different design has been developed which lowers the discharge nozzle down into the carton. In other words, the carton is placed under the valve in the position approxi-
mately as shown by the dotted lines on Figure 49-A,
310 with the valve and discharge mechanism just above it.

In the first operation of the valve, very rapidly, but in the first portion of the movement under the control of

the solenoid, the valve sleeve 558-16 and the valve member 558-20 with the stem, which is uncolored but extends up into the tank, those two parts are moved down. I think your Honor will see how that happens.

The armature of the solenoid is raised upwardly, and that raises the little purple link coming out of the bottom of the solenoid, as we see it in 49-A, and lifts the right-hand end of the lever 7-F. The lever 7-F is pivoted about the mid-point, unnumbered but upon the supporting post between the valve and the solenoid. Since it is pivoted there, when the right-hand end is raised, the left-hand end is lowered.

That left-hand end, which has a form such as shown on Plaintiff's Exhibit 49-E, is so connected to the valve sleeve that it lowers the valve sleeve and the valve member 558-20 is supported by the valve sleeve at that point so it moves down at the same time. So that the whole business moves down, not as far as shown in 49-B, but at least into the top of the carton.

311 So that fluid flowing out of the discharge port would flow into the carton and not over the top. It is moved down that far, the two members together, 558-20 and 558-16, but after a limited movement of that type, a cotter pin, which is shown just above the level of the bottom of the tank on this drawing, comes to rest upon the bottom of the tank, and that prevents any further movement of the valve portion 558-20.

As the solenoid finishes its operation, the sleeve member 558-16 is moved down still further into the position shown in Plaintiff's Exhibit 49-B. That is, the valve member 558-20 has been stopped in the position shown in this Exhibit 49-B, but the sleeve moves down still further to thereby open the valve.

Now since the valve is opened here by movement down, and since the valve parts are in their lowermost position in the open position, it is obviously impossible in this situation to close the valve by gravity. When the current is turned off in the solenoid 54, the parts would not go back to closed position by gravity.

312 That is a quite coventional situation. For instance, if I had a lever arm pivoted, as I have this one pivoted (demonstrating), that if I had a member out at the lefthand end as I look at it, at the righthand end as you look at it, if, in its closed position it were in the position I now have, with that lefthand position up, in

order to open it if I pushed the righthand end, as you see it, down, it would normally stay in that position. If I want it back up again, when I have taken my hand off the end, I have to put something on there to hold it up or to push it up.

On the other hand, if I had such a device with a valve member which in its closed position is in the position I now have it at the bottom, and I apply pressure to raise and open the valve, all I would have to do under that circumstance is to release it and it comes back to closed position.

That, in my judgment, is a very clear mechanical eqaivalent to our two mechanical expedients. Certainly having the one valve, the replacement on the other was quite within the ordinary skill of a mechanic.

Now turning to Plaintiff's Exhibit 40, we see
313 the physical exemplification of the structure we have just seen in the drawings.

We have a fluid supply container marked 14, which had an outlet as it came to us at the back, obviously for connection to a pipe leading to some sort of a fluid supply.

Inside of that tank is a float of the type shown on the drawings, and that float controls the valve just inside the conduit leading from the main fluid supply source, and so adjusted as to maintain a quite accurate level of fluid in that tank or supply container 14.

There is a solenoid 54 mounted upon a bracket and mounted to the same bracket or post 18 wich supports the fluid supply container, although in this instance it is mounted underneath the container. In the Mojonnier structure the solenoid is mounted above the container.

At the bottom of the co.tainer is a discharge nozzle leading downwardly, as we see it in the Mojonnier device, but with a somewhat different type of nozzle and valve operating mechanism, which I will show in a minute, if I may have the small model that was used here yester-
314 day.

Then there is a switch placed right behind the position where the cartons come. Incidentally, here there is at the left in this particular machine a carton-opening mechanism, then a somewhat different means for sliding the carton into the rack to hold it open and hold it in position so that the end of the nozzle can come down into the top of the carton.

In this instance, different from the construction shown

in the commercial machines where the carton itself actuated this switch as it came into filling position, in this case there is a pivoted member in front of the switch with a rod running horizontally for a distance of about 12 or 15 inches. In order to operate this machine, when the carton is in place, the operator in one form or another, at one end or another, contacts that lever or that rod manually and actuates the switch to start the timer in operation.

315 The timer is the mechanism shown at the left and marked as 66. If I open it, you will see that there are a series of switches, some of which have no pertinency here because on this machine, as in the previous machine, we have a closing mechanism which was operated here by hydraulic pressure that has nothing to do with our issues here. But there was a small hydraulic compressor in here that was controlled under one of these switches, and a heater over here for heating the top to help seal the carton, and then a stapling machine here, controlled I believe either manually by foot power or by hydraulic power.

The buttons at the bottom were intended, that is the main button, by switching the single control button above the "2, 4, 5" below, enabled one to swing from one capacity to another, from half pints to half gallons, and the buttons below each of those designations were for finer adjustments, if that proved to be necessary.

By Mr. Clement: Your Honor, may we mark that as Defendants' Exhibit 10 for identification so we will know what we are talking about?

316 (Thereupon said model was marked DEFENDANTS' EXHIBIT NO. 10 for identification.)

By The Witness: I believe that I can best explain the operation of the valve on the accused machine by reference to the sample of the valve, Defendants' Exhibit 10 for identification.

As your Honor can see, there is a sleeve that comes down from the flat member in this exhibit, which represents the bottom of the fluid supply container, and looking at the top there is an outlet port, a bottom delivery outlet port in that fluid supply container.

Then there is a sleeve, to which I am now pointing, and which corresponds to the sleeve 558-16 on Plaintiff's Exhibit 49-A, and colored blue there, and that sleeve can be moved up and down.

That is the discharge nozzle, and at the bottom of that nozzle is an opening and a small baffle which is an additional part that may be put on to deflect the fluid one way or the other. With that off, and if we drop the
317 valve far enough, we can see that there is a discharge orifice or port in the bottom of that nozzle.

The valve operating lever, as shown in this model, is quite different in some detail to the one shown on Plaintiff's Exhibit 49-E, and differs from the one shown on the structure, Plaintiff's Exhibit 40. But in principle, I believe, it is substantially the same.

In other words, there is a lever arm which is pivoted upon a small rod, and it is intended when the device is operated to open the valve, what is the back or right-hand end of the device, as your Honor looks at it, will be raised. There is a collar upon the sleeve 558-16 over which the valve operating lever 7-F slips.

So that as I move the one end of the valve operating lever up, the other end moves down, and because of its connection to the sleeve, the sleeve itself moves down. As your Honor will note, during the first approximately quarter inch of movement, the valve member itself, the valve rod, which is designated 558-20 upon our draw-
318 ings, moves down in unison with the nozzle 558-16.

319 At the end of that quarter-inch travel, the cotter pin which is shown in the drawing but not numbered and which appears here (indicating) just below a collar on that valve stem or valve rod, that cotter pin contacts the bottom of the tank and prevents any further movement down of the valve rod and the valve member itself, but the solenoid moves further, so, with the valve member being held and the discharge nozzle moving down, the orifice is open.

It is a direct reversal of parts. In the case of Mojonnier, we hold a nozzle and move up a valve member. In this case, after that first preliminary movement where they both go together, the ball valve is held solid and the sleeve or discharge nozzle or port moves down.

In both cases they open the valve port and provide a fixed orifice.

By The Court: What is the advantage of having that difference in movement?

By The Witness: There is one advantage which I see, as I pointed out, and that is, it permits, with the structure,

with the cartons coming in on a horizontal plane or
320 a horizontal line, as they are with that particular mechanism, it permits the opening in the valve to get down into the carton before the valve itself is opened.

Now, beyond that, I have considered it some, and as far as I can see, except for that one feature, there could be only one point of dictating it and that is, an attempt in getting away from some other structure.

By The Court: That's all I have.

By Mr. McCanna:

Q. I believe, Mr. Fishleigh, you were going to demonstrate the operation of the machine.

A. Well, at this time I am not prepared to demonstrate. I wanted to be free to operate the mechanism without water in it, if I saw fit, and we haven't put water in that machine as yet.

If we can, perhaps at noon, if I am still operating in the afternoon and you wish to see it, we can demonstrate it this afternoon.

Q. That will be satisfactory.

Now, have you made any comparisons of the defend-
321 ants' accused machine, Model MJ semi-automatic with the structure disclosed in the Mojonnier reissue patent to determine whether or not, in your opinion, there are any similarities between the two structures?

A. Yes. I have made a study and comparison.

Q. And what conclusions did you arrive at?

A. In my opinion, there is a very close similarity in the mechanical elements of the filling machines, in the combinations as a whole and in the functioning and the results obtained.

Q. Have you made a study to determine whether or not the mechanical elements of the Mojonnier reissue patent find a response in the defendants' accused filling machines?

A. Yes, I have.

Q. What conclusions did you arrive at?

A. It is my studied opinion that each and everyone of the mechanical elements of the three claims in suit find a response in the defendants', or in the accused machine, in term and in substance, either directly or by way of obvious mechanical equivalents.

322 Q. Will you please explain to the Court wherein, if at all, the mechanical elements of Claim 1 of the Mojon-

nier reissue patents are found in the defendants' accused filling machine, Model MJ semi-automatic, which is Plaintiff's Exhibit 40 here.

By Mr. Kipnis: If your Honor please, I don't want to be technical, but counsel keeps referring to this machine as "the defendants' accused machine."

By the Court: It is the accused machine.

By Mr. Kipnis: We stipulate it is a machine sold by the Brasile defendants and I think we should be accurate and call it the "accused machine".

By Mr. McCanna: I believe the evidence later on may prove something else.

By the Court: Well, that may be, but—

By Mr. McCanna: Yes. I will observe that and call it the "accused machine".

323 By the Witness:

A. I have prepared a chart to help clarify my answer to that question. That chart is on the easel and is being marked as—

By Mr. McCanna:

Q. 50.

A. (Continuing.) Plaintiff's Exhibit 50.

(Thereupon said chart was marked Plaintiff's Exhibit No. 50 for identification.)

By the Witness:

A. The same situation exists here that counsel was just discussing. Perhaps I should draw a line through the "defendants" at the right and change the last line in the title "Are Found in Accused Filling Machine."

By the Court: Well, I will remember it.

By the Witness: Where is my pointer?

This chart, Plaintiff's Exhibit 50, has been organized in the same manner as the two or three charts we saw earlier this morning in connection with the plaintiff's commercial structure.

324 The "yeses" in the column headed "has element found in the accused filling machine" indicates by the "yeses" that I find each element present.

The introduction:

"in a dispensing mechanism, the combination of"

is clearly within the meaning of that term as used here in the Mojonnier patent. The accused machine is a dispensing mechanism. It is a filling machine.

The first element:

"a fluid container"

That element is present in the accused machine. It is the dispensing container 558-25 which I have colored light yellow and pointed out by means of the arrow.

The second element:

"means for supplying fluid to such container"

I have said that that was the main liquid supply tank 16, and the little tank which I previously pointed out was shown in fragmentary section in one of the drawings furnished by one of the defendants and I have said that
325 that and the conduit 21, which I have colored dark yellow, leading therefrom, was the means for supplying fluid to said container.

However, if some other means is used, if a pump is used to supply fluid, under pressure, *in this instance*, at least, it would clearly respond to that mechanical element.

The third element:

"means in said container operable to maintain the fluid in the container at a preselected level"

That element finds its response in the float valve means 558-9 and 558-2, which are colored brown and green, respectively, and which are respectively the float mechanism and the valve mechanism controller thereby.

They operate to maintain a substantially constant level or substantially constant hydrostatic head in that tank or supply, or dispensing container, above the discharge orifice of the valve.

The fourth element:

"a valve mounted on the container for dispensing
326 fluid from the container into a receptacle"

That is the ball valve 558-20, colored red, which cooperates, of course, with the dark blue sleeve 558-14, to open and close an orifice leading from the container, down into the receptacle to be filled.

The fifth element:

"a solenoid mounted on said container for operating said valve"

I have said, yes, such a solenoid is the solenoid unit 54. I should point out that there is what to me is a slight and inconsequential difference: Whereas, in the Mojonnier structure that solenoid is mounted on top of the container and directly mounted on the container, the solenoid 54 of the accused machine is supported, as shown on the machine itself, on a bracket that extends from the rod 18, upon which

the tank is supported. So that there is a slight difference in that respect that one is underneath and the other above; one mounted directly upon the container, the other mounted upon the same rod that the container is mounted upon,
327 so that the whole thing is one unitary structure.

And in that regard, I should call your Honor's attention to Figure 5 appearing on Sheet 3 of the patent in suit, which your Honor will recall, we discussed while I was explaining the Mojonnier patent and in which the solenoid 88 is mounted underneath the container instead of on top, as shown in some of the other figures.
328 So that the mounting of the container underneath is at least disclosed and shown in the Mojonnier patent in substantially the same form as the solenoid 54 of the accused machine.

The next element:

"a member extended through said container for interconnecting said solenoid and said valve"

I have said that that element finds a response in the valve lever 7-f, which we have colored purple, and I have indicated here that as to the portion extending through said container, that we have a situation which, in my judgment, is a reasonable mechanical equivalent

There is, as your Honor notes, a rod member extending upward from the valve, the little red ball valve 558-20 in the accused machine up into and partially through the container 558-25, very much as is the case in the lower part of the rod 62 in Figure 3 of the Mojonnier patent at the left of this chart.

While there is a difference, that is, the operating mechanism is below the container, in my judgment and in
329 order to have mechanical equivalent, we must have similar structures operating in substantially the same way to produce the same results. It is my studied opinion that this change, whereby the sleeve is moved down under the direct action of the valve lever and the valve lever placed underneath instead of running up through, is a reasonable mechanical equivalent and I have so indicated.

The seventh element:

"an interval timer for controlling the energization of the solenoid"

That is clearly present. The adjustable timer 66, which is shown in the upper view on the right of this chart, the portion 66 being also colored in orange—

"and means to actuate said timer to energize said solenoid and thereby move said member to open said valve"

That is the switch 77 which we have also colored orange and it shows both in the upper and lower views on this chart and which does serve to energize the solenoid when the switch is operated and that thereby moves the 330 valve lever 7-f to open the valve.

By Mr. Clement: Is that switch 71 rather than 77? I believe you said 77.

By the Witness: If I did, I misspoke. The chart shows 71. The drawing shows 71.

By the Witness:

A. (Continuing.) The last clause in that last element says:

"whereby a substantially constant volume of liquid is dispensed each time said solenoid is energized"

and that means, because the device maintains a substantially constant hydrostatic head above the orifice, because the valve when opened has a constant orifice or constant orifice factor, and because the valve is opened rapidly and held open for a carefully predetermined time, those three factors are present in the accused machine as they are in the Mojonnier patent, to provide for a substantially constant volume of liquid to be dispensed each time the solenoid is energized.

By the Court: Take a short recess.

(Whereupon a short recess was taken.)

By the Court: Proceed.

331 By Mr. McCanna:

Q. Mr. Fishleigh, will you please explain to the Court wherein, if at all, the mechanical elements of Claim 6 of the Mojonnier reissue patent are found in the accused filling machine, model MJ semi-automatic?

A. I have prepared a chart showing wherein the mechanical elements of Claim 6 of the Mojonnier patent are found in the accused filling machine.

It is on the easel and is marked for identification as Plaintiff's Exhibit 51.

(Thereupon said chart was marked Plaintiff's Exhibit 51 for identification.)

By the Witness:

A. This chart is organized in the same way as the previous ones.

In Claim 6, the introduction is:

"A filling machine for delivering an accurately controlled predetermined quantity of milk and other free flowing fluids for the repetitive filling of individual milk containers and the like each in a single complete operation, the 332 combination of"

That is precisely what this accused machine is intended for and does do, so I have said, "yes," that element is found in the accused filling machine.

The first element:

"a relatively large main fluid supply tank:"

On the basis of the drawing and what I have known of some installations, I have said, "Yes," to that element, that that finds a response in the main liquid supply tank 16, colored gold.

That is the tank shown fragmentarily in the upper right of the lower figure on this chart and while not shown as a relatively large one. it is shown only in fragment portion, clearly, this machine, to be of any use at all, would be operated either with a large main fluid supply tank or some other source, which, in my judgment, would be the mechanical equivalent in this instance.

The second element:

"a fluid supply container having a fluid capacity substantially smaller than said main supply tank and 333 larger than the quantity to be delivered in filling said individual containers;"

That, again, is the ordinary arrangement and if the tank itself were not used, some other source would be used, which either would be a large source or a continuous source, at least to keep the thing in operation over a much longer period than would be possible just with the fluid container 558-25 itself.

The third element:

"A bottom delivery outlet having a given orifice factor and area of orifice, through which outlet orifice the fluid freely flows by gravity;"

That element finds its response in the discharge nozzle 558-16, colored blue, having the opening 44, perhaps in cooperation with the tubular member 558-15—

In other words, the portion from the bottom of the tank extending down, including that colored blue, and it does have an orifice 44, uncolored, but a fixed opening in the bottom, that has a given area of orifice when the valve is

open, and a fixed orifice factor, a precise response in
334 this case, though, as I pointed out previously, in the defendants',—or in the Majonnier patent, there are, again, two parts which are held fixedly or rigidly, whereas, in this accused structure, the two parts, 558-15 and 558-16, move relative to one another during the opening of this valve.

That movement does not effect—or affect the operation of the machine in compliance with the principle of using a fixed hydrostatic head and a fixed orifice.

The fourth element:

"a valve in said bottom outlet operable between an open position in which the fluid flows for delivery into an individual container positioned beneath and in filling coaction with said outlet and a closed position for stopping said flow;"

335 I have pointed out that the valve member is in the bottom of that bottom outlet. It is the valve member 558-20 colored red, and it moves between an open and closed position, a snap type of action as between those two positions, under control of the solenoid so that the valve is for all practical purposes either open or closed, there again facilitating the control of the volume which would be difficult if there was considerable variation and considerable flow at different openings.

I have had no hesitancy in saying that that valve is operable between an open and closed position, even though actually it is the blue sleeve 558-16 which is moved during the opening portion.

I have pointed out, I am sure, the difference: That if I have two things here, whether I move this up or more that down, is immaterial. Both expedients are well known.

The fifth element:

"means operable to deliver said fluid from said main tank to said fluid supply container and to maintain a substantially constant preselected hydrostatic head of the
336 fluid in said supply container, said hydrostatic head having a predetermined value with relation to said orifice factor and area of orifice whereby to effect controlled relatively rapid continuous flow of the fluid from the supply container to the said individual container when the latter is in said filling position;"

That element finds its response in the conduits connecting the tank, the main supply tank 16, and the supply con-

tainer 558-25, and it does maintain a substantially constant hydrostatic head. With an arrangement of this sort, the maintenance of a substantially constant hydrostatic head has a direct effect, that is, a direct contributing factor to the flow of the liquid through the orifice in the discharge outlet.

337 I mention that because there are some instances where levels are maintained, but the maintaining of such a level has no direct effect at all upon the discharge. It could just as well be one place or another. It more or less prevents an overflow, or something of that sort. But in this instance it has a direct connection and a direct effect upon the flow.

The last elements, 6, 7, 8, and 9:

"a timer for controlling the operation of said valve, said timer having a starting switch and operating to control a continuous uninterrupted time period in response to the initial actuation of said switch, said timer controlling said valve to continuously hold open said valve throughout said time period whereby to deliver said predetermined flow and quantity of fluid in a single complete operation to each said individual container and whereby the preselected constant factors of said hydrostatic head in the supply container and said orifice delivery produce relatively rapid filling of said individual container and control of

338 splash effect of the fluid in its discharge into the said individual container, said timer being adjustable to vary said time period and the predetermined quantity of fluid delivered to each individual container."

That finds its response in the timer 66 and the closing switch 71, and the operation is precisely in accordance with the various clauses in these elements.

Q. Mr. Fishleigh, will you please explain to the Court wherein, if at all, the mechanical elements of Claim 7 of the Mojonnier reissue patent are found in the accused filling machine?

(Thereupon said chart was marked Plaintiff's Exhibit No. 52 for identification.)

By the Witness:

A. The chart which I have prepared showing wherein the mechanical elements of Claim 7 find their response in the accused filling machine has been marked for identification as Plaintiff's Exhibit 52.

The introduction to this claim is identical with the introduction to Claim 6. This structure is a filling ma-
339 chine and does deliver accurately controlled quantities of free flowing fluids.

The first element:

"a large source of fluid"

I have said finds a response in the main liquid supply tank 16 or such other source of fluid as may be used in the operation of this machine.

"a fluid supply container having a fluid capacity substantially smaller than said source and larger than the quantity to be delivered in filling said individual containers,"

That is quite similar, I believe identical, with that element we considered previously, and finds a response in the dispensing container 558-25. That is the container shown in outline and in its upper portion in light yellow on this chart.

340 The third element

"a fluid delivery line interconnecting said source and said supply container,"

That is the conduit 21, colored dark yellow, including perhaps the tube 558-5, which extends down in the container below the fluid level, just as the tube 27 in the Mojonnier Figure 3 extends down below the level of the liquid in the container.

"A valve operable to control the flow or fluid through said fluid delivery line into said supply container."

That is the valve 558-2, colored green, which controls the flow through the conduit 21 and the tube 558-5 into the container, the fluid supply container 558-25.

The fifth element

"a bottom delivery outlet having a given orifice factor and area of orifice through which outlet orifice the fluid freely flows by gravity,"

341 That is the discharge nozzle 558-16, which we have colored blue, and have explained previously.

"a valve in said outlet operable between an open position in which the fluid flows for delivery into an individual container located beneath said supply container and a closed position for stopping said flow,"

That is certainly true of the valve 558-20, colored red, which operates between an open and closed position, cooperating of course with the sleeve 558-16.

The seventh element

"a float in said supply container operable to control the first mentioned valve—"

That is the green valve 558-12 which we have previously considered—

"and also operable to maintain the fluid in the supply container at a preselected level and providing a hy-
342 drostatic head of predetermined value with relation to said orifice factor and area of orifice whereby to effect controlled relatively rapid continuous flow of the fluid from the supply container to said individual container when the second mentioned valve is held open."

The second mentioned valve being the one 558-20, which opens the port in 44 in the sleeve 558-16.

That finds its response, of course, in the float 558-9, colored brown, which in turn controls the green valve and maintains a substantially constant level and a substantially constant preselected hydrostatic head above the discharge orifice in the discharge nozzle.

The eighth element

"A solenoid for operating said second mentioned valve,"

Clearly we have a solenoid unit 54 colored violet for operating the valve 558-20 to open the port 44 in the discharge nozzle 558-16.

343 "operating means interconnecting with second mentioned valve and said solenoid,"

That I have said is the valve lever 7-F, colored purple, which interconnects the solenoid and the sleeve 558-16 for the purpose of opening the valve.

It is true here that there is a connection to the sleeve and the sleeve is moved. Well, the sleeve and the valve both moved together in part, and then the sleeve moved further while the valve member itself is held stationary, whereas in the other the valve only is moved and the nozzle held stationary. But they are a mere reversal of parts.

The last element:

"an interval timer for controlling the energization of said solenoid to continuously hold open said second mentioned valve for a preselected time period—" and so forth.

"said timer being adjustable to vary said time period and the predetermined quantity of fluid delivered to each individual container."

344 That finds a response in the adjustable electronic timer 66 having the closing switch 71 which does operate in accordance with the statement in that element.

By Mr. McCanna: Your Honor, that concludes Mr. Fishleigh's direct testimony.

Cross Examination by Mr. Clement.

Q. Mr. Fishleigh, I would like first to ask if it is your position that the invention, the alleged invention illustrated in the patent in suit, is a combination of old elements or are there some new elements in that combination?

A. I think that as to the physical structures involved that one can find a similar physical structure in the art.

Q. Would you characterize the float valve as being an old structure?

A. Float valves as such are old, yes, sir.

Q. I have particular reference to the float valve in the patent in suit. Is that an old structure in your opinion?

A. Broadly, I would say yes. I don't happen to
345 know of a specific detail like that, but I don't think it is important.

Q. I believe you said on your testimony yesterday, Mr. Fishleigh, that you had made a detailed study of the patents which we have cited as being relied upon by the defendants during trial. Have you made such a study?

A. Yes. The amount of detail has varied as the patents have been inserted and withdrawn. Sometimes they were withdrawn before I made a very detailed study, and I didn't make it afterward.

Q. Did you study the Fagan and Mojonnier patent?

A. Yes.

Q. No. 2,147,366?

A. Yes.

Q. Do you have a copy of that patent available?

A. Yes.

By Mr. Clement: I will hand to the Court a compilation of the patents which are to be relied upon by the defendants.

I would like to mark that compilation as Defendants' Exhibit No. 6 for identification.

(Thereupon said documents were marked Defendants' Exhibit No. 6 for identification.)

346 By Mr. Clement:

Q. Referring to that particular patent, do you find a float valve which bears a close relation to the float valve in the patent in suit?

I have reference particularly to Figure 2.

A. Yes, the float valve F is quite similar in its general operation, but differing in specific detail of construction.

Q. Wherein does it differ in its specific detail of construction?

A. In the shape of the structure.

Q. Would the function of that valve be substantially the same, if not identical, with that shown in the patent in suit?

A. It would be quite similar.

Q. Would it be identical?

A. I am not sure it would be identical. I think there might be some differences of accuracy, perhaps, because of the specific shape, but substantially identical.

347 Q. Just what do you mean by differences of accuracy?

A. Well, depending upon the shape and construction of float valves, some of them are more sensitive than others. I think this one would be quite similar in its operation.

Q. So that the float valve that is shown in the patent would not be characterized as a new element?

A. No, I don't think that the float valve is new.

Q. I believe you mentioned in your direct testimony yesterday that this float valve in the patentd device is—I don't remember your exact language, but I think it was to the effect that it was completely different from the type of valve that is used in a toilet flush box.

A. Well, perhaps we had better see what I said. I don't remember exactly, but if the detail is important, what did I say?

Q. While I am searching for that, would you tell me, please, whether or not the form of valve that defendants have incorporated in the accused machine is different 348 from the type of valve that is in a toilet flush box?

A. Well, if I remember correctly what I said, and did not misspeak, to the same extent that I distinguish the action and operation and purpose of the float valve in Mojonnier from the float valve in a toilet, the same thing is true here.

I do not believe that I made any distinction as to the structure of the two. It is a fact, however, of course, that the general pivoted action is somewhat closer, as far as the structure of the valve is concerned, the float and its valve, the accused device is somewhat closer to a toilet box.

Q. I believe yo usaid, and I am quoting—

A. Whereabouts, please?

Q. On page 268. Do you have it?

A. Yes.

Q. The last sentence of the first full paragraph:

"A float valve, it is true, but maintaining a hydrostatic head of liquid with an entirely different idea in mind and having an entirely different purpose and obtaining an entirely different result."

A. That is correct.

349 Q. Are you familiar, Mr. Fishleigh, with the Winton patent number 2,030,951?

A. Yes.

Q. I believe you will note that there is a float valve incorporated in that device.

A. That is correct.

Q. Is that float valve different in structure or function from the float valve in either the accused machine or the patented device?

A. The float valve in Winton is for the purpose and does maintain a substantially constant level 11, as shown in Figure 1 of Winton. To that extent it is the same as the accused device and the Mojonnier patent, just in the broad concept of a device for maintaining a given level. But in the sense of a carefully selected level to produce a hydrostatic head for a specific purpose, and to have that hydrostatic head cooperate with some other part, Winton differs radically from Mojonnier and radically from the accused structure.

Q. Is the valve in the Winton structure as accurate as the valve in the patented structure?

A. Well, relatively, yes. The detail of that might 350 depend upon some detailed measurements.

Q. What if the float valve in Winton was not as accurate, or at least became slightly out of adjustment, and the level of the liquid rose to the point 44, which I think is best shown in Figure 3, and I pick that point because it is above the level of the container 35 that is lifted by the arm 43, and I think the dotted line or the broken line representation of 11 in Figure 3 shows where the liquid level would be ordinarily.

What would happen if that liquid level rose to the point 44 in Figure 3?

A. I take it that you mean to a point indicated by 44, when the member 35 is in that position? That is, 44 is a movable point.

Q. Yes, as shown in Figure 3.

A. Well, if the liquid level 11 rose above the top of

the sides of the member 35, then to the extent that it was above there it would interfere with the measured quantity, that is, after part of the liquid in 35 has run out, an additional liquid would run in.

351 Q. How long would the liquid be dispensed in that situation?

A. Well, as long as the valve remained open.

Q. And how long would the valve remain open? What element keeps it open?

A. It is driven and operated from the shaft S.

Q. In what figure?

A. Figure 2 I see it particularly.

Q. And does that cam—

A. I also see it in Figure 1.

Q. What is the number on the cam that is attached to that shaft?

A. I think it is 37, if I may check that just a moment—yes, the cam is 37.

Q. If the shaft S is rotated at a constant speed, what would the dispensing operation be of this device, assuming that the liquid level is raised to that small extent we mentioned earlier?

A. The container or measuring mechanism 35 would be filled when the device was in the position shown in Figure 2. It would then be raised to the position shown in Figure 3, and in the course of being raised, the movement of the measuring mechanism 35 would open the valve. It

352 would be held at that position while the measured quantity of liquid ran out plus some additional liquid if the level 11 had been raised above the contemplated level to a position above the top of 35—

Q. Is that the valve position shown in Figure 7 that you are mentioning?

A. Yes, that is correct.

Q. How long would the flow continue?

A. Until such time as the cam mechanism lowered the container 35, that is, the measuring container 35, the measuring cup 35, and in the course of its lowering permitted the valve to close again.

Q. My question related to a constant rotation of the shaft S, as to whether or not you would get a constant time period in which the valve would be opened and dispensing under those circumstances.

A. Yes, under those circumstances, if the Winton construction was changed from what is shown and contemplated

there to something different, we would have a constant time.

Q. If we eliminated the measuring cup and made a direct connection between the arm 43, shown in Figure 3, and the portion that is lifted, the portion of the valve that is lifted by the measuring cup, as shown in Figure 7, 353 would we have a time controlled flow dispenser?

A. Well, we would, but we wouldn't have a fixed orifice or fixed factor with the structure, if I interpret it correctly here.

Q. What do you mean by fixed orifice factor, Mr. Fishleigh?

A. Where throughout the operative portion or practical portion of the liquid flow or the valve opening, the orifice opening, and consequently the factor which controls in the hydraulic formula for determining flow would be constant. In other words, it contemplates a rapid opening and rapid closing. We would have a somewhat different situation if we opened a valve slowly and closed it slowly.

Q. I am not quite clear as to what the definition of the term "orifice factor" is from that statement. Could you simplify it a little?

A. Well, actually it is a factor which is applied in one of the hydraulic formula to determine, knowing the velocity, to determine what the volume per unit of time would be.

Q. When you say it is a factor, I think you are not defining what we mean by orifice factor. I am just 354 searching for an easy definition of what we mean by orifice factor.

You mentioned earlier a text book, I believe, that has been cited by the defendants. I believe you said you had had an opportunity to examine that text.

A. Well, I have a copy of it here. I examined it for the particular point I was referring to this morning.

Q. Are there many elements which go into the definition of the term "orifice factor" or the definition of what the orifice factor is in a particular dispensing arrangement?

A. Well, there may be many or quite a few, depending upon the particular—

Q. What are the elements in Winton which would be different from the patented device so far as the orifice factor is concerned?

A. Well, the principal difference is, if I understand Winton correctly, that the valve would be opened slowly so that there would be a discharge immediately it was opened.

and during a portion at least of its opening, the area of the opening, the effective area of the orifice would be changing.

355 Q. Is that not also true of the patented device?

A. Theoretically, yes. Practically, no, because the action in the patented device is a rapid action, so that it moves from closed to open position, practically speaking, instantaneously.

Q. What is the basis of your statement that you think Winton was attempting to have a slow opening? I don't know whether you said closing or not, but slow opening.

A. I don't think I said that.

Q. Oh, excuse me, I may have misunderstood you.

A. I don't think I said he was attempting to have a slow opening. I said, if I understood the construction, that is what he would get, and it would make no appreciable difference, at least in Winton, because he was, as organized, he opened the valve and held it open for a period longer than he contemplated would be necessary to permit a fixed measured quantity of liquid to flow out. Whether it opened slowly or rapidly would make no particular difference.

He did not depend upon the orifice as a measuring device at all. He measured out a quantity, as one might dip
356 a quantity of liquid with a measuring cup or some other cup out of a pail, and then poured it.

Q. Does the form of the valve member that moves with relation to the orifice have anything to do with the orifice factor?

A. Yes, at least the form of the opening. It depends quite definitely on the form of the opening and the—

Q. I understand that, but I am talking about the valve member. Aren't all the factors in the definition of orifice factor related to the orifice itself?

A. Eventually, but they may differ depending upon the valve which operates it.

Q. Mr. Fishleigh, do you have a copy of this text book?

A. Yes.

Q. Will you please turn to page 1 of that text?

I have a photostat here of the pages I will be referring to, and I would like to hand them to your Honor.

I am reminded that I had best fully identify the text book. It is called "A Treatise on Hydraulics," by
357 Hughes and Safford, published by the McMillan Company, 1926.

I believe you will find in the second paragraph on page

1 of this text a discussion of some of the historical background of hydraulics. Referring to the Romans:

"It was realized that two orifices, otherwise the same, must be set at the same depth below the surface in order to discharge the same amount."

Now we have been talking here a great deal about a constant hydrostatic head and the fact that if you have a constant hydrostatic head and a constant orifice, in the sense of its physical dimensions, shape, and so on, for a given period of time, you will get a constant volume of flow from that orifice, is that correct?

A. That is correct.

Q. Does this sentence at the end of this paragraph that I just read indicate, in a slightly different fashion, the same principle?

A. Yes, I think that is correct.

Q. I refer you to page 2 of this text book, Mr.
358 Fishleigh, again the second paragraph, in which there is the formula V equals the square root of 2 gh set out, and it says:

"By 1732 we find that this law was understood and applied."

That is the same formula that is referred to in the patent, is it, Mr. Fishleigh?

A. That is correct.

359 Q. Mr. Fishleigh, in applying Claim 1 of the patent, I believe you indicated that there was a mechanical equivalency between some of the elements of the accused device and that which is defined in that Claim 1.

Would you identify again what those mechanical equivalents are with respect to the opening and closing of the valve?

A. Well, I think the mechanical equivalency was with respect to a member connecting the solenoid and the valve for the purpose of operating it.

Q. Do you have a copy of the file history of the original patent available to you?

By the Court: What is it?

By Mr. Clement: The file history of the original patent.

By the Court: The patent in suit you are talking about?

By Mr. Clement: Yes. I would like to have the Reporter mark this certified copy of the file history as Defendants' Exhibit 7 for identification.

(Thereupon said document was marked Defendants'
360 Exhibit No. 7 for identification.)

By Mr. Clement: This is the file history of the original patent, your Honor. There was a reissue, you will recall.

Q. Mr. Fishleigh, do you have a copy available to you?

A. Yes, I have.

Q. I refer you to page 46 of the file history. I believe there were certain limitations added to the original Claim 10, which subsequently became Claim 1 of the patent, and also is Claim 1 of the reissued patent, to achieve an allowance of that claim as Claim 1 of the original patent.

Would you read what those limitations are?

A. Well, I am not sure that I could agree with your complete statement, but if you would like me to read what appears on Claim 46—

Q. Claim 10, page 46.

A. I should say page 46. In an amendment it says:

"In response to Office action of June 30, 1952, please amend the above-entitled application as follows:

361 "Claim 10, line 7, after 'solenoid,' insert—mounted on said container—same line, after the comma (,), insert—a member extending through said container for interconnecting said solenoid and said valve,—line 9, cancel the amendatory insertion and replace with the following 'to energize said solenoid and thereby move said member to open said valve whereby a substantially constant volume of liquid is dispensed each time said solenoid is energized."

And then they cancel certain others.

Q. Mr. Fishleigh, I think you will find on page 51, the second paragraph, a further explanation in the remarks—

By the Court: It is after 12:30, gentlemen. We will recess until 2:00 o'clock.

(Whereupon a recess was taken in the above-entitled cause until 2:00 o'clock p.m. of the same day, Thursday, May 19, 1955.)

363 And thereupon the following further proceedings were had herein:—

By the Clerk: The case on trial.

By the Court: Proceed.

CLARENCE T. FISHLEIGH, called as a witness on behalf of the Plaintiff herein, having been previously sworn and examined, resumed the stand and testified further as follows:

Cross-Examination (continued) by Mr. Clement.

By Mr. Clement: I believe there was a question pending, your Honor.

By the Court: You were referring to the file history?

By Mr. Clement: Yes, we were referring to page 51 of the file history of the original patent and we had just gotten to the remarks explaining the limitations which had been added to Claim 10.

I believe they begin:

"Claim 10 has been amended to distinguish over the combination of Warren and Ashkenaz relied upon by
364 the Examiner by defining applicant's novel, composite dispensing unit for handling large quantities of freely flowing fluid and dispensing this fluid in accurate, measured volumes. The claim specifically defines structure not shown in the cited references by setting forth that the valve means for dispensing the fluid is mounted on the container, that the valve means is controlled by a solenoid which is also mounted on the container and that the solenoid and valve means are interconnected by a control member which is likewise mounted on the container. It is apparent, therefore, that applicant has defined with specificity his integral unit for controlling the flow of fluids."

By Mr. Clement:

Q. Mr. Fishleigh, in view of that statement in the file history of this patent, do you still hold to your contention that the accused device has the equivalent structure that is
defined in those phrases we were just discussing,
365 namely, the valve means controlled by the solenoid, which is mounted on the container and that the solenoid and valve means are interconnected by a control member which is likewise mounted on the container, and I believe the claim has been amended also to include the limitation that the rod extends through the container, the rod interconnecting the solenoid and the valve.

In the light of that choice at the time this claim was

allowed, do you feel now that your interpretation of the defendants' structure as an equivalent is sound?

A. Yes. I had read that portion of the file wrapper and considered it at the time that I was developing the charts showing the presence of the mechanical elements in the accused structure and it was my opinion then, as it is now, that this language of distinguishing from the prior art would apply equally well to the structure of defendant as it did to the structures shown in the patent.

366 Q. Are you familiar with the—

A. (Continuing.) I have in mind, continuing somewhat beyond the portion you read, where I think it goes a little bit further into the purposes. That is my opinion.

Q. Are you aware, Mr. Fishleigh, of the difference between the new Claim 6 which was introduced in the reissue patent, the first claim introduced in the reissue patent? Are you familiar with that claim?

A. Not Claim 6 that we have been considering?

Q. No. This was the claim which was first introduced with the reissue application when it was filed.

A. I don't have that in mind at all at the moment.

Q. I have a copy here of the claim and I have underlined the new language which was added to make this claim and I have crossed out the language which was dropped out of the original Claim 1.

I hand you a copy.

(Handing document to the witness.)

By Mr. Clement: I will hand a copy to your Honor also.

(Handing document to the Court.)

By Mr. Clement:

Q. Now bear in mind, Mr. Fishleigh, that this was
367 the claim that was introduced at the beginning of the reissue prosecution and I want to make it clear once again that the portions that are underlined in this claim are the portions that were added to original Claim 1 in the original patent to make this newly submitted claim in the reissue application, the portions which are in parentheses and which are crossed out are the portions which were deleted from original Claim 1 of the original patent, to make this new claim in the reissue application.

What is the first element that you see has been added, Mr. Fishleigh, to this claim?

A. Well, according to this, that is the first portion which is underscored—a support.

Q. What is the first significant element that has been deleted to make this claim—or description of the element, I should say?

A. Well, the first element that I see is "container" and then the next one is "extending through said container."

Q. Would you read the phrase that includes that last clause, the complete phrase, please?

A. (Reading:)

368 "An operating member extending through said container for interconnecting said solenoid and said valve."

Q. And the portion that has been dropped from that is what?

A. (Reading:)

"extending through said container."

Q. If this was the first claim which was presented upon reissue, does it not illustrate that the error which was felt to be in the original patent, was omitted in this first claim submitted on the reissue application?

A. Well, I couldn't draw any such conclusion without looking into it somewhat further than that.

Q. Well, let us refer to the oath which was submitted with the reissue application. Do you have a copy of the file history of the whole of the reissue application, that is, a copy of the file history, including—

A. I have a certified file wrapper. Which portion of it are you referring to?

Q. I am referring to page 8 at the bottom thereof in which it is specified the error is relied upon for reissue.

369 A. Well, I have page 8. Now, where are we talking about?

Q. Starting at the bottom of the page, the first sentence, would you read that paragraph, please, Mr. Fishleigh?

A. Beginning with "Deponent further states"?

Q. Yes.

A. (Reading:)

"Deponent further states that he verily believes that the aforesaid Letters Patent No. 2,667,990 referred to in the foregoing petition and specification and herewith offered for surrender are inoperative for the reason that the specification thereof is defective and insufficient, and that the defect and insufficiency consist particularly in the failure fully and adequately to claim the invention, viz, by claims

of adequate scope such as Claims 6, 7 and 8 now presented."

370 Q. Does that lead you to a conclusion about what the error was?

A. No.

Q. Would you continue reading, please, the next paragraph?

A. (Reading.) "Deponent further states that errors which render said Letters Patent so inoperative arose through error without any deceptive intention on his part, and that the following is a true specification of the errors relied upon, to wit: the failure to present claims of adequate scope, such as Claims 6, 7 and 8; that such errors so particularly specified arose as follows—"

Q. I think you had best continue reading, Mr. Fishleigh, so that we can get the full picture. I will stop you when I think we have the full impact.

A. (Reading.) "Deponent, after having presented to his patent attorney what he considered to be complete technical information concerning his invention entirely relied upon the judgment of said attorney to obtain for him claims of such scope as he was entitled to in view of

371 the prior art, and said attorney prosecuted the patent application to the best of his ability on the basis of said technical information and believed that claims of adequate scope had been allowed when the application was passed to issue. Failure more fully to claim the invention and to present claims of the scope of claims 6, 7 and 8 was due to the fact that the aforesaid attorney failed fully to understand the complete scope of the invention. As a consequence, the ways of better expressing the invention as set forth in the above claims did not occur to him. All reasonable care, study and thought were given to the preparation of the original application and to the prosecution thereof, and the specification and claims were carefully read when the patent application was allowed in order that the invention might be protected as fully as possible. How-

372 ever, neither deponent nor his attorney realized that there were other possible modes of better defining the invention than those which were adopted in the original claims.

"Deponent further states that it was not until after February 2, 1954, when upon examining claim 1 of Letters Patent No. 2,667,990 he first appreciated that it contained

an immaterial limitation, and that he was entitled to claims of the scope of claims 6, 7 and 8. Immediately thereafter it was decided to file the present reissue application, and the same was prepared as soon as it was practicably possible to do so.

"Deponent believes that claims of the scope of the present claims 6, 7 and 8 are essential adequately to protect the invention which the Deponent is entitled to claim, which should be claimed, and which prior to February, 1954, Deponent always supposed to have been adequately claimed.

"Wherefore, Deponent asks for this reissue in good
373 faith and for the purpose of properly and adequately protecting his invention."

374 Q. Mr. Fishleigh, do you now feel that the dropping of the language from original Claim 1 was to correct the error as specified in that oath?

A. Well, apparently that was a part of it. Apparently the patentee, in this instance, and perhaps his attorney, felt that that would more adequately protect it.

Q. Isn't it apparent, Mr. Fishleigh, from that oath, that at the time of the reissue, the record shows that the inclusion of that limiting language with respect to the rod extending through the tank or container was regarded as error sufficient to make the patent wholly or partly inoperative or invalid?

A. I couldn't agree to that, no, sir.

Q. I believe you said that Claim 1, and particularly this language we have just been discussing, about the rod which extends through the container, defines a structure the equivalent of which is present, in your opinion, in the accused device.

I am speaking now of the rod 62 and its associated elements that make it operative.

A. Well, that we may be clear, I think I pointed out that most of the mechanical elements of Claim 1 were directly present in the accused device, and that as to
375 one mechanical element, or perhaps one pair of mechanical elements that I felt that we had perhaps a reversal of parts, which in my judgment made them equivalent.

Q. Mr. Fishleigh, if the patentee regarded the language that we are discussing, namely, the limiting language which was dropped from the claim, so limiting as to make the patent invalid, inoperative, and therefore a mistake or error, don't you think you are making the same mistake

that he made when he said it made the patent inoperative, by saying that that language defines an equivalent structure?

Isn't that the objection he had to that language, that it didn't define an equivalent structure in his mind?

A. I don't quite agree with that. In the first place, there were some other things added. There were other claims. That may have been one feature that he felt—

Q. What other features were added to Claim 1? We are discussing Claim 1, Mr. Fishleigh.

A. He may have felt that there might have been some question about it. I don't feel that as to that language that there is that question about it.

376 I do feel this—of course, I agree with him that if that were out, and some other language in, that there wouldn't be the necessity to consider mechanical equivalents. Because I agree that in term, I think I have pointed out that in term that mechanical element is not specifically in the accused structure.

Q. Well, isn't it a fact that he regarded the inclusion of that language as making his claim inoperative?

A. I can't say that. I don't know what he regarded and I don't—

Q. I think the oath speaks for itself, Mr. Fishleigh, you have just read it.

A. Well, then, if it does, then my opinion on it doesn't make any difference. I don't get that conclusion necessarily from it.

Q. Mr. Fishleigh, with reference once more to the float valve that we discussed this morning, is it correct that in your opinion the function of that valve is novel?

A. I don't think that I would say that the function of the float valve per se was novel. I think that the use of it, the result obtained by that float valve in com-

377 bination with the other things produced a novel result, but I don't think the float valve as such was novel.

Q. If it produces a novel result, isn't its function novel?

A. May I illustrate my point?

378 Q. Certainly.

A. We may have a situation where we have two elements, let's say A and B, which existed in the prior art and both functioned in a certain way. It may be that when A and B are put together, that B, let us say, functions exactly as it did before, but the result obtained from the functioning of B cooperated with the element A or the

functioning of element A, produces something which was not present either in A or B.

That is what I think we have here: That the float valve per se in the sense of regulating a fairly constant level of liquid in a container was old.

Q. Mr. Fishleigh, if you have your book of prior art patents there, I would like to have you refer to the Warren patent, No. 2,515,363.

A. Yes, sir.

Q. Do you have it, sir?

A. I have it, yes.

Q. I would like to refer you particularly to Column 2 of the first page, line 40. Would you read starting with "* * * with the liquid—"

379 A. (Reading):

"* * * with the liquid being maintained at a predetermined level in the dispensing tank irrespective of the withdrawl of liquid therefrom,—"

Q. And continue, please.

A. (Reading):

"in order that the hydrostatic pressure for the gravity flow of liquid from the dispensing tank to a valve-controlled dispensing outlet, will remain the same, to insure the delivery of a measured quantity of liquid to a cup at each operation of the machine."

By Mr. Clement: Your Honor, we have reference to Warren patent 2,515,363. I think it is the third from the back, and it is line 40 of Column 2.

By the Court: All right.

By Mr. Clement:

Q. Is that a teaching of the maintenance of a constant hydrostatic head in order to insure delivery of a meas-380 ured quantity of liquid to a cup at each operation of the machine, Mr. Fishleigh?

A. Well, that is a statement of an object, seeking that, but the functioning of the device as shown and described doesn't quite accomplish that.

Q. Will you refer to Figure 10, Mr. Fishleigh, which is reproduced in this chart which we have before us, the upper left figure, Figure 10.

A. Yes, I have it.

Q. What is the function of the float 129?

A. To maintain the level of the liquid in the container shown in Figure 10 at substantially the level shown by

the dash-dot line just below the center of the float in that figure.

Q. Is that the maintenance of a constant hydrostatic head?

A. In that figure, maintenance of a constant level, but not a constant head—substantially constant hydrostatic head, but other pressures superimposed above it here upsets any such balance.

Q. In what way?

A. Well, a pressure exists above the liquid—

Q. Isn't atmospheric pressure above the liquid in any container?

381 A. May I have the question?

Q. I am sorry. Isn't atmospheric pressure above the liquid in any container that is open?

A. Yes, but not in the container shown in Figure 10.

Q. Isn't the pressure in the container shown in Figure 10 relatively constant?

A. In the sense of the Mojonnier patent, no.

Q. Isn't it as constant as atmospheric pressure?

A. No.

Q. Why not?

A. Well, if I remember my atmospheric pressure, the lowest that we are likely to have around here is considerably over 29 inches, and the most that we are likely to get is approximately, well, somewhat under 31 inches. I believe that would be a variation of somewhere between 5 and 10 per cent in the extremes. This patent specifically contemplates a variation of approximately 33 per cent.

382 Q. How do you arrive at that figure?

A. In column 6 of the specification, beginning at line 61, the patent says:

"It will be noted that the loading of the spring 123 is such that it will remain closed to maintain a maximum pressure of about 4 pounds per square inch in the beverage chamber 119, or a pressure at least sufficient to maintain combination of the liquid in such chamber, and that the valve 122 will open in opposition to the spring 123 should the pressure in the beverage chamber exceed this predetermined pressure,"

and so forth.

But then the patent contemplates the uncertainties of pressure regulating valves of that kind, and beginning in line 1 of column 7, says:

"Should the spring 123 fail or get out of adjustment,

sufficient pressure, say about 3 pounds per square inch, will be maintained in the pressure chamber 120 by the loading of the spring of the check valve 125, to insure
383 that carbonation of the beverage in the chamber 119 will be maintained with but a slightly lowered pressure which will have only a negligible effect on the quantity of beverage dispensed from the chamber 119 during the cup filling operation."

Of course, I think that the last three lines that I read point very definitely to the nature of this patent and its structure because it indicates the type of accuracy that was required, since it says that that much variation in pressure would cause a negligible effect on the quantity of beverage, clearly indicating it is completely outside the scope of the patent in suit.

Q. Mr. Fishleigh, isn't it a fact that the exception you referred to is a safety factor that is built into the machine to maintain pressure under unusual conditions when something has gone wrong?

A. Well, unusual to some extent. That is, that factor is there if the spring gets out of adjustment sufficiently to drop it down to that point.

Q. That would be comparable to the float valve getting out of adjustment in here, for example?

A. No, I wouldn't agree with that.

384 Q. Why not?

A. Well, one is a relatively stable type of unit which normally would stay quite regular, and the other is one which, as this patentee suggests, can be quite ordinarily figured to be out of adjustment, varying adjustment

Q. Where do you find that?

A. Well, I conclude that from the very fact that in the next paragraph to the one where he is talking about maintenance of his pressure, he goes directly into pointing out what he does when that thing doesn't work just as indicated it might previously.

Q. Isn't he just describing a safety mechanism that he has provided?

A. That is correct.

Q. When you mentioned the fact that this float valve that is in this tank is very accurate, I would like to call your attention to the fact that this morning, I believe it was, you mentioned that a gravity type of flow is not always used to feed this tank.

Is that correct?

A. Yes.

Q. I believe there are cooling mechanisms, for example, in use in the dairy industry which use pumps to feed
385 the milk through the cooling device?

A. That is my understanding, yes.

Q. And that milk is therefore under pressure?

A. That is correct.

Q. And sometimes it is substantial pressure?

A. I couldn't give you the upper limits on that. I am not familiar with it.

Q. Let's assume that there is a substantial pressure exerted on fluid as it comes into here (indicating).

A. That is correct.

Q. Let's assume further that perhaps there is a variation in the pressure, such as we were discussing a moment ago. What will happen to the regulation—

A. Where were we discussing?

Q. In connection with the Warren patent.

A. Oh, I see.

Q. What will happen to the regulation that is accomplished by that float valve?

A. Well, if it is excessive, there might be a leakage through that float valve. If there is excessive pressure.

Q. Why would there be a leakage?

386 A. Because if there is too much pressure down through the tube 27, I believe it is, that is, so that the total pressure upon that valve exceeds the upward pressure of the float valve, there could be a leakage.

Q. What would be the result of the leakage?

A. The level in the float 11 would rise until the two forces balanced.

Q. And if the pressure varied, you would not have a constant hydrostatic head, is that correct?

A. Well, you might very well if the pressure varied. If the pressure got excessive, you might not.

Q. I believe yesterday in your testimony, at page 252, you stated that—

A. Will you wait just a moment until I locate that?

Q. I am sorry.

In discussing the patent in suit, you stated that in one form of the device it is desirable to have a low hydrostatic head so that there is a minimum of liquid left in the tank.

A. Well, I said that it was desirable to have a low level so that there was a minimum of liquid that would result in a lower hydrostatic head, although I don't believe I said that

it was necessarily desirable to have a low hydrostatic head.

387 Q. Is the hydrostatic head that is shown in Figure 6 the same as that in Figure 3 of the patent in suit?

A. No.

Q. What would be the effect of that variation in hydrostatic head on the dispensing of the machine?

A. Well, that is not a variation in the hydrostatic head in the sense that we have certainly been speaking of it.

With a lower constant hydrostatic head, we would require a larger discharge outlet in order to get an equivalent flow, or, if we used the same discharge outlet, there would be a slower flow.

Q. I believe on page 253 of your testimony yesterday you stated that—

A. Is that 253?

Q. 253, yes:

"The structures which preceded it were quite extensive, quite involved" — when you were referring to the Mojonnier structure—

"The structures which preceded it were quite ex-
388 tensive, quite involved. But this was the simplest and the first one,"

again referring to the Mojonnier machine.

I call your attention to the Beyer patent, Mr. Fishleigh, in the collection of prior art patents we are relying on.

It is patent number 668,303, the second one in the book.

I would ask you if that is a simple or an extensive, quite involved machine, such as you were referring to.

A. Oh, I think that particular one is fairly simple.

Q. How about the Purvis patent, Mr. Fishleigh, number 517,127, which is the first one in the book?

A. What about it, in what respect?

Q. Excuse me. I was continuing my question as to whether that was a simple machine or an involved, extensive one.

A. Well, it is a relatively simple device but quite a different sort of structure.

Q. It does have the rod extending through the container to operate the valve, does it?

389 A. Oh, yes.

Q. Does it have the solenoid operating the valve?

A. Yes, it is a solenoid-operated valve.

Q. I call your attention to the LaPorte patent, number 1,166,607, the fourth one in the book of patents.

How would you characterize that machine in the sense of whether it was involved or simple?

A. Oh, I think that is a relatively simple machine.

Q. Let us turn now to patent number 1,531,007, Jackson.

A. I might say, of course, in connection with LaPorte, that as far as its operating mechanism and its arrangements for changing from one type of — from one size of container to another, and insofar as its facility with which it can be cleaned and taken care of, it is quite a bit more complicated than the structure of the patent in suit.

What was the next one?

390 Q. Let us look for a moment at how they dispense the liquid in LaPorte. Don't they merely drop the space element in the cup 10, to take up some of the space that the liquid would normally take up?

A. Yes, that is correct. They take off the cover, get inside of it and put in a special element, such as 25. In order to do that, they take off the top of the members 20 and 19.

Q. What about —

A. (Continuing.) And in so doing, expose the container to contamination.

Q. What about the Jackson patent, No. 1,531,007? Would you call that a complicated device or a simple one?

A. Oh, I think that is quite relatively simple, in the device, and in the results it would obtain.

Q. What would you need to add to Jackson, for example, to obtain the same results that you get with the machine that is in issue, the patented machine, for use with paper cartons, for example?

A. Well, —

Q. For use with paper cartons, for instance.

A. Well, we, in the first place — in the first place, of course, Jackson is merely a solenoid operated valve in
391 which the solenoid is manually energized through the medium of the container.

So, we would have to modify and rearrange the valve member K so as to, at least as shown in this single figure if I interpret it correctly — we would have to eliminate the restrictions alongside or between that member HK and the sides and put on another container and a control of the level for that; provide a timing mechanism, in other words change from this one where we simply turn the valve on for a while and then turn it off, as we do with a spigot as you mentioned on a cider barrel; watch to see that it fills

up to where we want it, form that into a volume control device.

Q. Is that valve operated by gravity in the sense of its closing?

A. Yes.

Q. Is the valve opened by a switch closing in reaction to the container coming into conjunction with the switch?

A. Well, yes. The container operates the linkage NO and as that is raised, the switch DB is closed. That energizes the solenoid and that raises the member H to open that valve.

392 Q. In your testimony yesterday, on page 254, you made the statement — I think you were speaking with reference to maintaining the conditions of an accurate hydrostatic head and all the conditions which are set out in the patent as being necessary for the proper operation of this machine, and you said:

"First, to get that sort of thing, we have a reasonably true orifice. In order to have orifice flow, we cannot have any great obstructions above the orifice which would restrict the flow nor any particular obstructions below the orifice which would restrict the flow."

I call your attention, Mr. Fishleigh, to the type of nozzle that you have on this present machine, Plaintiff's Exhibit 39 (indicating) and ask if there is not a very substantial restriction or obstruction to the flow immediately below the orifice.

A. Well, there is a baffle there. I haven't measured it carefully to see, but it is my belief that the opening through the nozzle opening to the side, would correspond certainly to the orifice opening. I haven't checked that. It could vary a little, one way or another.

393 Q. Certainly it is an obstruction, is it not?

A. It is a deflection.

Q. You get the deflection from the impinging against the obstruction, is that correct?

A. Well, in that sense, yes.

Q. On page 255 of the record from yesterday, I think you were talking about the timer. In fact, you talked at some length about the timer.

Is there anything in Claim 1, for example, which indicates what type of timer would be necessary to have the structure that is defined in Claim 1?

A. May I have the chart of Claim 1 for a moment? Claim 1 merely calls for:

"An interval timer for controlling the energization of the solenoid"
and that would cover any timer which fell within what I understand to be the standard qualification in such a case, to what is shown in the patent or any reasonable mechanical equivalent thereof.

Q. But the benefits that you obtain from this particular type of timer are not defined in that claim?

A. No.

394 Q. It could be a cam?

A. I think it could be. I think I could design a cam which would operate to give the results which this type of solenoid operation gives. Many cams would not fulfill those requirements.

Q. On page 26 —

A. And, of course —

Q. Excuse me.

A. (Continuing.) I should say this: That Claim 1 does call for a solenoid, so if we departed entirely—normally when we use, if we use a cam timer, that operates directly upon whatever part we are controlling, either directly or by way of some sort of linkage and many, many timers would not give an operation which was comparable to this solenoid.

Q. On page 266 of your testimony, Mr. Fishleigh, you indicated and said:

"And your Honor will see at a glance that with such an arrangement as this, we are able to maintain that hydrostatic head much lower than we would if we simply came out and tried to put a valve of some sort on the bottom of a big container, in a big main container, and that has
395 a definite advantage, both in the matter of facilitating flow, making a slower flow, permitting a large orifice and a slower flow, to get the same quantity of material, but also it is quite advantageous from the standpoint of splash and foam effect which we would get. We would get less."

I call your attention particularly to your statement that you made that you get a slower flow and that that is an advantage. I now call your attention to the page 273 of your testimony at a time when you were reading the claim and referring particularly to Claims 6 and 7, the elements in Claims 6 and 7. One of the portions of that element is described — I will read the entire element:

"a float in said supply container operable to control the first mentioned valve to replace the fluid in said supply

container as it is dispensed and also operable to maintain the fluid in the supply container at a preselected level and providing a hydrostatic head of predetermined value
396 with relation to said orifice factor and area of orifice whereby to effect controlled relatively rapid continuous flow of the fluid from the supply container to said individual container when the second mentioned valve is held open."

The claim states:

"whereby to effect controlled relatively rapid continuous flow.'

On page 266 you were indicating a big advantage is to get slower flow.

Could you explain that?

A. Oh, surely. One is talking about volume and the other is talking about velocity.

When I said it was advantageous to get slow flow, there is a distinct advantage to have the material come out of the container at a relatively slow velocity over a fairly large cross-section. Naturally, it is desirable in any filling mechanism and production, to get as rapid a volumetric flow as is possible, but, for the same volumetric flow, there are some advantages in a slow velocity flow for the same volumetric flow. There is nothing inconsistent at all about those two statements.

397 Q. Which type of flow is referred to in the claim of the patent?

A. What is that?

Q. Which type of flow is referred to in the claim of the patent when they say "relatively rapid flow"?

A. Well, I would construe it to mean volume flow and if not, certainly "relative", is relative to one thing or another, and if they are talking in terms of relative velocity flow, they certainly are not talking, as I did, about the comparison with the flow that we would get with the very substantial head or a substantial pressure behind the orifice.

It was my opinion that that was talking about volume flow.

Q. Mr. Fishleigh, will you look to the patent in issue, I mean the reissue patent, please, and particularly column 6, line 3.

Will you please read the first sentence of that paragraph starting with the words "The volumetric"?

A. (Reading):

"The volumetric constancy of discharge of the dis-

pensing mechanism of the present invention can probably best be understood by considering the applicable laws
398 of hydraulics."

Q. And the next sentence, please?

A. (Reading):

"The equation for the steady frictionless discharge from an orifice is one of the first known quantitative relationships in hydraulics and is expressed as follows:"

Velocity equals the square root of 2gh.

Q. Mr. Fishleigh—

A. Where—

Q. Excuse me. Is that actually a quantitative relationship?

A. Oh, I think so. I don't know what—

Q. Does it include all the factors that are normally involved?

A. Well, this is the theoretical frictionless discharge. If you get to determining the flow through a specific orifice, there are other factors that enter into it.

Q. Is there a so-called coefficient of correction which is normally used to get a quantitative result as opposed to a qualitative result?

A. Yes.

399 Q. Is there a phenomenon of contraction which takes place in an orifice flow which is not taken into account in this so-called quantitative equation?

A. There is likely to be, depending upon the orifice.

Q. Are those two factors normally put together to combine into one, that which is normally called the coefficient of discharge for the orifice?

A. Yes, that is correct.

Q. So that this again is not actually a quantitative equation but a qualitative one, is that correct?

A. Well, you are a little bit too deep for me on that distinction. I would say this was more theoretically quantitative and the other was practically, as applied to some specific condition.

Q. Oh, but Mr. Fishleigh, as a practical matter, you always get this contraction of flow, do you not?

A. That is correct.

Q. And that is not constant and so this really is not a practical equation?

A. Well, this is not the equation that one could use in taking a specific—in determining a specific flow in a

specific orifice, that is correct. This is the basic, fundamental equation.

400 I am not—you may be right, but my terminology doesn't distinguish between that in that particular way, that one is quantitative and one is qualitative.

401 Q. What is the accepted meaning of the word "orifice" as used in this statement?

A. Well, ordinarily it is an opening in a thin walled, or thin wall, such that length or the dimension through the orifice or through the opening would be such that the current of flow would not touch any part of the orifice after it first hit the first portion of it.

Q. What is the orifice in the Mojonnier patented device?

A. It is the opening 44 in the discharge nozzle 43.

Q. We have already discussed, Mr. Fishleigh, the effect of pressure on the valve in the Mojonnier patent device. If we had a tank as is indicated here (indicating)—let us assume that it is twenty times larger than this, or more—and it was immediately above the dispenser, as is indicated here (indicating), we would get a certain pressure from that hydrostatic head in that tank above the normal supply tank, would we not?

A. Yes, sir.

Q. If we move that tank up to the next floor, what

402 effect would it have on the pressure?

A. Assuming that the pipes were fairly sizable, it would considerably increase that pressure.

Q. Do any of the claims in the patent take that factor into account?

A. Well, I don't think that the claims contemplate that we would be moving the main tank back and forth, from one to another. I don't think they refer to that.

Q. Is that a factor which might enter into the operation of the machine, where that supply tank, the large supply tank was located, vertically, that is?

A. Well, I can well imagine that if, in the first fifteen minutes of a run, a tank was located at a point such as those tanks 16 on the models are concerned, and then for the next fifteen minutes, we had one on the thirty-second floor, that it would make some considerable difference if we jumped around from one to another.

Q. I had reference specifically to the fact that you said earlier if you had relatively higher pressure you probably would get leakage in this valve.

403 A. Well, now, I don't think I said that.

Q. I am sorry.

A. I said if you had an excessive pressure beyond what the device was designed for.

Now, if you are talking about the specific showing in the patent, assuming those patents or drawings as you have them on the easel are working drawings, there is definitely a limit to which that float valve would operate, but if I were to operate with one on the second floor, I naturally would design a valve, a float valve which would operate against this type of pressure.

Q. Referring again to the patent in suit, in Column 6, Mr. Fishleigh, line 18—

A. Yes.

Q. Line 18. Would you read the sentence beginning with "The volume—"

A. (Reading):

"The volume of liquid discharged through such an orifice at any time is, of course, directly dependent upon the velocity of flow through the orifice and the area of the orifice."

404 Q. And the next sentence, please?

A. (Reading):

"By virtue of the constant supply source 16 and the control means such as 17 in Fig. 3 of the drawings for maintaining a constant head in the receptacle 14, the term in the above equation is also constant."

Q. Continuing—

A. (Reading):

"Moreover, since the area of the nozzle is constant for frictionless fluid, the volumetric discharge for a constant time period remains constant."

405 Q. Mr. Fishleigh, is that statement, in effect, that if you keep all these variables in an equation constant, you are getting a constant result?

A. Yes, but it goes further than that. It says—that, I think, is quite fundamental, but it goes further to say that in this mechanism, you do keep the factors constant. I think that is the import of it. In this mechanism, you do keep them constant or that they are constant, rather than what, of course, is well known: that if you have three variables in an equation and keep them all constant, that the result is constant.

Q. What special provisions are in this structure to keep these constant?

A. Well, in the first place, the selection of a hydrostatic head, the maintenance of a uniform hydrostatic head and the circumstances where the value of that hydrostatic head is to be used, and then the selection of a valve orifice that cooperates with the hydrostatic head to give the flow that is desired.

Q. Both of those are what we referred to this morning as known by the Romans, I believe, is that correct, those two factors?

406 A. Well, I think we said that—well, I didn't say as to whether or not the Romans knew that. The furthest we carried forward with our formula, at least, was back somewhere in the '17's.

By the Court: 1781.

By the Witness: But, at least, it was a long time previously.

By the Court: 1781, wasn't it?

By Mr. Clement: 1732, your Honor, I believe.

By the Witness: I wouldn't want to take exception, but that was my information, or my recollection.

By the Court: 1732.

By the Witness: Anyway, it was well before this patent was filed.

By Mr. Clement:

Q. What is the viscosity factor referred to in this discussion in the paragraph we have been reading? in the paragraph we have been reading?

A. Well, different—with a given head and with a given orifice, we will get a different flow, depending upon the viscosity of the liquid flow and the factor which must be applied to our equation, to get the flow, under those conditions—I believe I am correct in saying—is the viscosity factor.

407 I haven't reviewed the details of some of that recently, but that is my recollection of it.

Q. Is this equation comparable to the equation that the distance traveled is the product of the velocity times the time, generally speaking? Is it that type of equation?

A. Well, now, what equation are you talking about now?

Q. I say, the distance traveled is equal to velocity times the time?

A. What is the equation that is similar to that?

Q. The equation that we have referred to in this paragraph: V equals the square root of 2gh.

Just generally speaking?

A. Well, it would be—it would have to be a very, very broad generality. Actually, this deals with the velocity and you are talking about another one which deals with distance.

Q. Well, there are two. There are three variables, or at least three variables in the equation that I gave you.

If you keep the two variables of velocity of time, constant—in other words, if you were going to Peoria
408 or to some town that is 100 miles from Chicago and you drove for 50 miles an hour for two hours, you can assume you will get to Peoria in the two hours, can you?

By the Court: Well, of course, if it isn't a clear road, you will go much slower.

By the Witness:

A. Well, certainly they are both equations that have two variables and certainly if you have an equation with two variables and you hold both of them constant, the result is constant. To that extent, yes.

By Mr. Clement:

Q. Turning to the claim of the patent in issue, Mr. Fishleigh, would you please look at Claim 1?

By the Court: There is one thing that has been troubling me. Take this Fagan—and we might as well have the question answered now—this Fagan—

By Mr. Clement: Fagan and Mojonnier.

By the Court: Yes. What is that float valve used for there?

By the Witness: Sir?

By the Court: What is that float valve used
409 for?

By the Witness: What is it used for?

By the Court: Yes.

410 By the Witness: In a structure such as shown here in Figure 2, it has been found—

By the Court: I can't find it. Wait until I find it. Where is it?

By Mr. Clement: It is 2,147,366, your Honor, about the middle of the book. It is 2,147,366. They are in numerical order.

By the Witness: I believe I can explain that by reference to Figure 2, at least to start out with.

By the Court: Yes.

By the Witness: This is a vacuum type filler in which vacuum is applied to the bottle in the position shown, with the bottle at the righthand of that figure.

By the Court: Yes.

By the Witness: And as the air is drawn from the bottle M, liquid is sucked up from the pool, I believe it is E—yes, in the bottom, and up through the pipe, apparently 179, at least up to the top and then down into the bottle, when the bottle is filled and lowered, thereby disconnecting it from the filling mechanism; what is left in the 411 tubes has to run back in the pool at the bottom and your Honor will note that there is the incline portion of the tube going up to about the line—section line 66, and then a vertical portion coming back to fill the bottle.

Now, it has been determined or found empirically, I believe—it is the only one that I know of—that in order to get that material back, without too much of it, any substantial amount leaking down over the bottle, that it is necessary that the top of the pool be at least five inches below the top of the bottle so that it is, of course, desirable or necessary that a pool be provided down here at the point E, from which the milk or liquid is drawn up by the vacuum.

The float valve is provided at a point somewhat—in this machine was provided at a point somewhat more than five inches below, to prevent the level in that pool E from 412 getting up closer to the top of the bottle than the five inches.

Now, that float does not determine a constant hydrostatic head or a constant level in the pool E, because, during the operation, the air that was in the bottle, is sucked up into the container J, or rather into the container L underneath the container J and along with that air—

By the Court: Wait until I find the "L."

By the Witness: (Continuing.) That is shown just to the upper left of the float valve, the small float valve.

By the Court: I see. Yes.

By the Witness: Now, not only is air drawn up into that container, but a certain amount of foam and a certain amount of liquid, toward the end of the filling operation, and that liquid is accumulated in the container L during a part of the revolution and when that gets around to

the other side, a valve is opened and that amount of liquid is let back into the container or to the pool E, so that
413 if, for example, just as that valve was opening, the float valve, or float F has stabilized at a level as shown in this drawing, then the minute that opened and whatever amount of liquid was in K, was permitted to fall down there, the level would rise in the pool E, to some considerable height above that and in practical machines, it is my understanding that the float was set up to keep the level at some—or to prevent the level from getting higher than about six and a half inches, something like that, below the top of the bottle.

Perhaps I should rephrase that and say that the float F was such as to prevent any liquid flowing into the main line 188 if the level was at that pint or above and then, superimposed on that, was the runback from the vacuum chambers, the chamber K, of any foam or liquid which was drawn up during the filling operation.

Does that make it clear at all?

By the Court: Well, I guess I understand it.

414 Q. Mr. Fishleigh, is there a continuous supply from the container K when the filling machine is in operation? In other words, is the amount of liquid that is dumped back into E, relatively steady when it is filling bottles?

A. It is my understanding that it is not in the sense of a steady flow; that the valves, during part of the cycle are closed and the liquid is drawn up and then during the latter part of the movement, the valves from K are reversed and the liquid is allowed to flow back down so that it is an intermittent flow.

I would say that over a long period, the amount per cycle or per rotation of the machine was probably, or might be quite close.

Q. But, that is, the flow would superimpose upon the flow coming from the supply that drops vertically from the upper tank?

A. That is correct.

Q. And the function of the valve 186, without that superimposed flow, would be identical with the function of the valve, would it not?

I believe you have already indicated that.

A. It would shut off the flow if the level of the
415 liquid were at or above the stabilizing point and would open the valve to permit flow if it went below, but with

that superimposed flow, it cannot, of course, function as does the float valve in the Mojonnier patent or in the accused structure, to maintain a substantially constant level.

Q. It could, is it not true, if the flow from K were constant—it would be a factor that would take care of itself, if it were a constant flow as the filler were being operated?

A. Oh, I think that perhaps is true, if it were a smaller flow than that which was required and came in a perfectly uniform amount, I think it would stabilize then.

Q. How much is that flow for K per bottle, for example?

A. I can't give it to you in terms, whether it is a quarter of a bottle or a half or a sixth. I think that would vary considerably under different conditions of operations.

Q. Normally it would be--

A. As I understand it--

Q. Excuse me. Go right ahead.

A. What were you going to say?

416 Q. You can go right ahead.

A. It is my understanding that the foaming characteristics of milk vary quite widely under different conditions which are experienced in normal operation so that it might make some difference.

Q. There isn't much volume, in terms of the amount of liquid, in foam, however is there?

A. No. It is unquestionably—for satisfactory operation, it would be substantially less than the amount that was filled.

Q. Is there a superimposed flow from the valve 266?

A. I missed that.

Q. Is there a superimposed flow from the valve 266? That is the other float valve. Excuse me.

A. Oh, I don't think I would call that a superimposed flow. I may not understand what you mean.

Q. Well, let us assume that the valve 186 is open, as you did before when you said the flow from K would upset it. Is there not also a flow from the upper container if the valve 186 is open?

A. Well, the flow from the upper container, if I understand it correctly, is the flow which the valve 18—or the float 186 is controlling.

417 Q. Yes.

A. Now, that is the flow—not a superimposed flow, but the flow.

418 Q. Do you happen to know, Mr. Fishleigh, how they

switch from quart bottles to pints, for example, in this machine, or what adjustments are necessary?

A. No, I couldn't say on this particular one.

Q. Is it common practice in filling machines in the milk industry to vary the rate at which the machine is operating when you go from a large container to a small container?

A. Well, I think I had better say I am not familiar with the detail of that. I think it is, but I am not sufficiently familiar with the detail.

Q. Do those filling machines in the dairy industry have a variable speed drive?

A. I couldn't answer that as to most machines. I do not know.

Q. Do you know of any that do?

A. I couldn't point to any specific one, although I wouldn't point to others. I am not familiar with that drive mechanism particularly.

Q. Do you know if it is common practice, Mr. Fishleigh, in the dairy industry to so time the filler that approximately at the time the bottle is full, it is taken off the filler so that there is no lost time in the filling machine?

419 A. I think that is so.

Q. And if you switch from quarts to pints, would that time have to be varied?

A. If you switched from quarts to pints on the same machine and kept that, it would have to be, and it is my understanding or my belief that that is true, but I cannot say positively. I don't know that.

Q. In effect you are changing the dispensing time, the time of flow from the machine, when you change that time, is that correct?

A. Well, I think it is the other way around, that if you change the machine so that the time of flow is less, that then you change the time to take it out.

Q. I don't understand you, Mr. Fishleigh.

A. Well, maybe we are both in the same boat because that was my trouble with your question. But I think, my feeling is that in your question you had the cart before the horse, so to speak.

Q. Let me rephrase it, Mr. Fishleigh.

If you had been filling quarts on a machine such as is illustrated in the Fagan and Mojonnier patent, using

420 quart receptacles and you changed to pints—

A. Yes.

Q. (Continuing.) —what adjustment do you make in the machine to take care of that change?

A. Well, I am not prepared to tell you about that. I do not know.

Q. If, however, you wanted to have the machine set so that the bottles would come off almost immediately after they were filled, then it would be necessary to reduce the speed of the machine when you put the pint bottles on—excuse me—increase the speed of the machine when you put the pint bottles on in order to get the bottle off as soon as it was filled. It would take half as long to fill the pint, is that correct?

A. That is correct, assuming that the flow was the same and as would be expected that the pint bottle would be filled more rapidly or quicker than the quart bottle.

Q. Is there any provision for changing the flow in this machine as you just suggested? I believe you were speaking of the speed of flow, were you not?

421 A. Well, I will have to say as to that detail at the moment, I can't tell you.

Q. Is there any provision for changing the speed at which the machine operates?

A. That again I can't tell you at the moment. I will be glad to look through it and refresh my recollection. I have been through it completely at one time and have refreshed my recollection on some of it, on what I thought were critical points but—

Q. I call your attention, Mr. Fishleigh, to page 17, the first column, line 56. Without getting into the details of the structure, I believe you will find the statement there: "Thus, with different liquids, different filling and drip periods are required."

I believe they are talking there about liquids of different viscosity, but it is a change in the time period, the time of filling.

A. That is correct.

Q. So that in this Fagan and Mojonnier device, which is disclosed in patent 2,147,366, you not only

422 have a disclosure of a float valve which is identical, substantially identical with the float valve of the patented device, but also you have a means of varying the time period of flow, is that correct?

A. I think that we can say you vary the rate of flow in it on the basis of that statement

Q. The patent says, does it not, that different filling and drip periods are required? That was from the first time of flow, was it not?

A. That wouldn't necessarily say that we made any change in the mechanism. For instance, if I am pouring a glass of water, it takes a certain length of time to pour it out of a pitcher. If I am pouring a glass of molasses, it takes considerably longer to pour it out of the same pitcher. I make no change in my mechanism or my procedure. It just takes longer basically.

423 Q. Fishleigh, I think we can resolve this quickly if you will refer to the first column on page 17, line 32. I think if you will read that paragraph it will refresh your recollection as to this patent.

A. Yes, there is a statement there that says that by shifting the plugs 86 and 87, that it is possible to shorten the fill time and lengthen the exhaust period.

Q. Now that we have turned to the prior art disclosures, Mr. Fishleigh, I think perhaps it might be appropriate to examine more closely some of these prior art patents.

By the Court: We will take a recess at this time.

(Whereupon a short recess was taken.)

By the Court: Proceed.

By Mr. Clement:

Q. Mr. Fishleigh, will you refer, please, to the Newman patent, No. 711,069.

Does this patent have a timed flow, timed dispensing flow?

A. Speaking very broadly, yes.

424 Q. Referring to the LaPorte patent, No. 1,166,607, this, I believe, is a measuring type of filler, is it not?

A. That is correct.

Q. Just how does that operate, Mr. Fishleigh?

A. The measuring unit or measuring cup is the member 10, as shown in Figure 1. In the inoperative position that cup is down, as shown in Figure 1, with the top of the cup below the level of the liquid in the container 1, and at that time the liquid will run into and fill the cup 10.

When the bottle is ready for filling, it is placed in the position shown on the platform 32, and that platform is raised hydraulically to contact the top of the bottle with the bottom of the mechanism shown at 16.

As the platform is raised further, the bottle is raised

and the member 11, which is connected to or carries the measuring cup 10, is raised until the top of the measuring cup comes up above the level of the liquid and opposite the hole 21 in the hollow tube 18.

As the bottle is continued to be raised the cup 10
425 raises further and the liquid runs down through, that is, the liquid in the measuring cup, the displaced or measured amount of liquid, runs down through the opening 21, down through the tube 18, into the bottle, until the mechanism reaches the position shown in Figure 2, with the bottom of the cup at that point up to the bottom of the opening 21, and it is held there until such time as the bottle is filled.

All of the liquid which has been measured out in the cup 10 runs down into the bottle. Then the platform is lowered, and a new bottle brought in position under the filling mechanism, and the cycle repeated.

426 Q. Could this mechanism be adapted to fill paper cartons rather readily?

A. I don't think I would consider it rather readily.

Q. Could you utilize an arm to move that element 16 upwardly instead of the top of the bottle in the case of a paper carton?

A. If I did what?

Q. Could you use an arm, similar to the arm in the defendants', or rather the accused device, to move the valve (indicating)—I am sorry, I didn't realize you had water in that, Mr. Fishleigh.

A. Well, I enjoy your reference to the defendants' device when I have been asked to keep away from defendants' device so religiously all morning.

Q. I believe I asked you a question, Mr. Fishleigh.

A. Well, I am no nearer to understanding. I think what you say is in some way could I put some mechanism other than a bottle top to raise the cup and tube. I think that could be done.

Q. Is this a gravity type filler?

A. I would so call it, yes.

Q. Does it have a spring loaded dispensing valve?

427 A. I wouldn't say so, no. I wouldn't consider it such.

Q. What is the function of the spring 17?

A. Well, the function of the spring 17 is to hold the measuring cup in the position shown in Figure 1, except at such time as there is pressure holding it up into some

other position. In other words, it is a combination of gravity action plus spring action. Because of the friction apparently of those long telescoping tubes, apparently they felt that they needed something more than the force of gravity to hold the cup down.

Q. I refer you, Mr. Fishleigh, to the Lippold patent, 2,171,757.

A. Yes.

Q. Is this a gravity operating filler mechanism?

By the Court: What is that number?

By Mr. Clement: 2,171,757.

By the Witness: Yes.

By Mr. Clement:

Q. What is the function of the spring 42?

A. The spring 42 functions to supplement the force of gravity and hold the member 30 and 33 down into the closed position, as shown in Figure 1.

428 Q. I believe there is an anti-splash element in this device, is there not? I believe in Figure 5 there is an element represented—

A. In Figure 5?

Q. Figure 4, I am sorry, Mr. Fishleigh.

A. Well, that is what I was looking at. I believe, if I may look at it for just a moment—well, I think you might call it that. It seems to me it is more what might be called an anti-bubbling device.

It is said that the member 37 is of such a construction that the flow of liquid down over that is divided into two parts, one going towards the outside of the bottle and one on the other side, and leaving a space in the center so that the air from the bottle can come up through the vent pipe 22.

Q. I will ask you again in connection with this patent, Mr. Fishleigh, do you feel that this could be adapted for, let's call it, arm operation rather than the bottle operation, rather readily?

A. Oh, I think perhaps it could be adapted for arm operation. Of course, if we are talking about arm

429 operation for use with paper containers, there are other problems besides that.

This device operates to fill a container to a given height, and stops the filling operation as far as the actual filling is concerned when it gets to that height, and that—

Q. But insofar as the opening and closing of the valve

is concerned, it could be done readily by the use of an arm operating on the element 30, I believe, is that right?

A. Oh, I think that no doubt is true that it could be raised or lowered otherwise than with a bottle. Any way that we could supply a force in a vertical direction.

Q. I direct your attention now to the Larsen patent, 2,164,530.

A. Yes, sir.

Q. And ask you what type of filler is represented there? Is it a gravity operated mechanism?

A. Yes, that is a so-called gravity flow filler.

Q. What type of valve does it have?

A. Well, it has a valve quite similar to what we have just been looking at, in which the bottle comes up
430 against the valve and opens it. We don't have the double acting device that we have in Lippold, where he has a valve both in the vent pipe and the fluid flow type. At least, it is not indicated or described here in any detail to warrant such an assumption.

431 Q. Does the valve as it is shown in Larsen have a rather close relation to the valve of the accused device, such as is represented in that exhibit next to you up there, Defendants' Exhibit 10 for identification?

A. Well, I wouldn't so call it. I certainly hadn't thought so before, and I don't see any striking similarities in them.

Q. Does it have the yoke element above the bottom of the tank, such as we have there?

A. There is a yoke element, yes.

Q. Does it have a pin above that yoke element?

A. I couldn't say from this showing. That is, I don't believe that that is the same type of cotter pin element, although it might be.

Q. Does this not appear to be a valve working merely in the reverse fashion of this valve?

A. Well, frankly, there is not enough to the disclosure here to say. There is no description of it. In fact, about all that is said about the nozzles—

"Means are provided for effecting vertical adjustment of the reservoir—" Oh, wait a minute, ahead of that.

Q. Starting, I believe, at line 52.

432 A. Well, yes.

"The machine is designed for filling bottles or containers with a liquid such as milk or the like. The rotary filler head comprises a reservoir 8 for the liquid to be handled, having any suitable means for maintaining a

supply of liquid therein, and a plurality of vertically reciprocable filling valves or nozzles 9 which are engaged by the upper ends of the bottles or containers as these containers are moved up and down by the vertical reciprocation of the pedestals 10."

That is all that is said about them. They are vertically reciprocable filling valves or nozzles.

Q. Would the type of valve that is illustrated there be apparent, as far as its construction is concerned, to someone skilled in this art of dairy filling mechanisms?

A. Yes, if one had used this type of valve, they perhaps would understand it in detail.

Q. You don't feel that it is obvious from the showing that the spring returns the valve to closed position, for example, or do you?

433 A. Oh, I have no question about that.

Q. And that the pin above the yoke holds the valve in a particular position?

A. Well, I don't think it is obvious from this whether or not the pin permits the valve stem to move or holds it in a fixed position. I would feel that it held it in a fixed position rather than having it move as the accused machine does.

Q. Does this Larsen mechanism have a variable speed drive?

I call your attention to column 2 on page 2, line 43.

A. 43, did you say?

Q. Yes, "The motor 7 may be pivotally mounted"—and so on.

A. Well, based on that, that tells me nothing about any variable speed.

Q. Is it common to have variable speed drives by such an arrangement? I call your attention to the element 33 also.

Well, Mr. Fishleigh, what I am getting at is that most of these machines are provided with variable speed drives to take care of the problem we mentioned before

434 regarding quarts, pints, and varying sizes of receptacles.

A. That is correct. Whether it be a variable speed drive or some other means, it is common.

Q. I call your attention, Mr. Fishleigh, to the Hothersall patent, 2,222,617, and particularly Figures 4 and 5 thereof.

Is this a filling machine for cartons, paper cartons?

A. Yes.

Q. Does it have a so-called anti-splash nozzle 65 shown in Figure 5 and Figure 4?

A. Yes.

Q. Does that have a close similarity to the nozzle of the form shown on the plaintiff's machine, Exhibit 39?

A. Yes.

Q. Is the purpose the same?

A. Yes.

Q. What is the purpose?

A. To direct the flow of liquid as shown in Figure 5 toward the side of the carton so that it will run down the sides of the carton with a minimum of splash and a minimum of foaming.

Q. Does this device have a float valve?

435 A. Yes.

Q. What is that element?

A. 56.

Q. In what figure?

A. Figure 1.

Q. What is the purpose of the float valve?

A. To regulate the height of the liquid in the container A, to prevent it overflowing or getting too high.

436 Q. Did you ever see a filling mechanism of this type that we have been discussing here today that did not have a float valve to maintain the level of the liquid in the supply tank?

A. No, I think not.

Q. We touched briefly upon the Purvis patent sometime ago. I would like to turn back to it for just a moment. That is patent No. 517,127, the first one in the book.

We discussed the fact that it had a rod extending through the container to operate a valve, which rod was activated by a double solenoid at the top of the container, mounted on the container.

How is the flow timed in this device, Mr. Fishleigh?

A. The flow timed?

Q. I call your attention to the second page of the drawings, Figure 6. Yes.

A. Well, I don't understand that the flow is timed in the sense that we have been talking about timed flow. There is a clock arrangement, as shown in Figure 6 of the drawings, that periodically operates the solenoid and holds the valve

open until such time as the liquid can flow from the
437 upper container A into a lower container B, and it flows until it reaches the bottom of the outlet I.

Q. Is there any distinction between a clock mechanism and a timer, Mr. Fishleigh?

A. Well, I think that a clock mechanism is a timer if it is used for the same purpose. I do not understand this timer to be used in the sense of the timers we have to control flow, as your question would imply, by regulating the duration of a valve opening to regulate the amount of flow.

Rather, this is a periodic device that every so often operates to permit a charge of lubricating oil to start down toward the machine. But as I understand it, the flow from the container A to the container B is controlled, not by the length of any valve opening or the timing, but until such time as it reaches a given level. Then on the reverse it flows until such time as the supply is exhausted.

Q. The valve is opened and closed by the action of the timing mechanism activating the solenoid, however?

438 A. That is correct.

Q. I direct your attention, now, Mr. Fishleigh, to the Engels patent number 2,542,239.

A. Yes, sir.

Q. That is a somewhat complex patent, but I merely want to ask you if certain elements are present in that device.

I ask you if device 222 is not a timing device?

A. Well, the device 222 is a motor, yes, and it operates from 222 through a variable speed mechanism 224 and some gears 228 and 230.

Q. Is the variable speed mechanism a timing device in the sense of varying the time of operation of certain elements in this combination?

A. I wouldn't say that a variable speed device just by itself was a timing device.

Q. Well, let's assume—

A. I was going to give you a complete answer here, and the whole thing certainly is the—

Q. I don't want to spend that much time on it, Mr. Fishleigh. I just want to know, for example, if you have a cam operated leverage system, and you vary the speed of the shaft, then the activation resulting from the rota-
439 tion of the cam can be varied in the sense of the time that takes place, is that right?

A. I would say that that was an adjusting mechanism, but not in and of itself a timing mechanism.

Q. Does this patent have a hydrostatic head? I refer you particularly to Column 6, line 58.

A. It has what the patent refers to and perhaps could be considered a hydrostatic head.

Q. Is there a float valve 304 in the reservoir 50? I refer you to Figure 8.

A. Yes, that is an alternate form and shows a float valve—no, not a float valve. It shows a float controlling a switch.

Q. Is there a discharge orifice 14? I refer you to Figure 1.

A. That is correct.

440 Q. Is there a supply tank 20 in Figure 1?

A. That is correct.

Q. I refer you to column 6, line 67, and ask you if there is a statement therein about the accuracy of discharge of this machine.

A. Yes, there is. It says—well, going back a bit, it says that:

"* * * when a machine of the present invention is properly constructed and operated such deposits may be maintained within one per cent of a predetermined desired weight."

Q. I refer you, Mr. Fishleigh, to the Bowman patent, No. 2,462,019, disclosing a beverage dispenser, and ask you if it has a time controlled solenoid operated orifice type dispensing valve?

I refer you particularly to column 10, lines 6 to 10.

A. May I have the question, please?

Q. My question was, does this mechanism disclose a time controlled solenoid operated orifice type dispensing valve.

A. I think I would have to say no, as your question is stated.

441 Q. What element does it not have in my question.

A. I don't think, as I recall it, and I am frank to say that I haven't been over the detail of this patent for some little time, but as I recall it, it does have a solenoid controlled valve, but the hookup is such that I would not consider it of the orifice type in the sense that we have been talking about them here.

Q. Mr. Fishleigh, I refer you to the Zsoldos patent,

1,639,679, in which is disclosed a coin-controlled liquid vending machine.

In your examination of this patent, did you find a timing mechanism?

A. A timing mechanism?

Q. Yes.

A. Yes.

Q. Is it a switch activated timing mechanism?

A. Yes.

Q. Does the coin marked X in Figure 1 drop into the chute 72 when placed in the machine?

A. Yes.

Q. Does that then cause the arm 70 to close the switch made up of the elements 68 and 69, I believe they are?

442 A. Yes.

Q. Does that switch being closed then activate the motor 40?

A. Yes.

Q. Does the motor 40 through the shaft extending horizontally to the left therefrom drive the cam, indicated in Figure 1, without a reference number, but it has the line 2-2 running through it?

A. Yes.

Q. And as soon as that cam is set in motion, does the switch 60 close?

A. Yes.

Q. Does that switch 60 remain closed for one revolution of the cam?

A. Yes.

Q. Is the switch 25 controlled by the cam?

A. Yes.

Q. The cam that is identified here as green in color?

A. Yes.

Q. Does closing of the switch 25 activate the solenoid 21?

A. Yes.

Q. Does activation of the solenoid 21 eject a plunger

443 19 from the interior of the solenoid 21?

A. Yes.

Q. Does the ejection of that plunger in turn cause the spring 20, shown in red on this chart, to be compressed?

A. Yes.

Q. Does it at the same time cause the valve 18 to open?

A. Yes.

Q. Is the valve 18 a dispensing valve?

A. I think so.

Q. Is the valve closed when the cam shown in green on this chart completes a revolution such that the raised portion of the cam passes beyond the shoe 29 of switch 25?

A. That is correct.

444 Q. Is there therefore a definite time period, assuming that the revolution of the cam is constant, is the time period that the valve is closed constant?

A. Closed?

Q. I am sorry, the switch 25 closed. I said valve. I am sorry.

A. Yes.

Q. Is therefore the valve 18 opened for a predetermined selected period, depending on how this cam is arranged?

A. Yes.

Q. Is this an adjustable cam?

A. Yes, I think it can be adjusted.

Q. In adjusting the cam, do you loosen these screws, which are shown near the outer periphery, and move the two elements of the cam so that you vary what is called the rise on the cam, the length of the rise on the cam?

A. Yes.

Q. Do you therefore open the valve for a predetermined time period?

A. Yes.

Q. So that you get a predetermined opening of the

445 dispensing valve in terms of period of time?

By the Witness: May I have that question again?

By Mr. Clement: I will ask the Reporter to read the question.

(Whereupon the question was read as above recorded.)

By the Witness:

A. Yes, that is of the valve 18.

By Mr. Clement:

Q. 18, yes.

A. And bearing in mind that that is merely an on-off valve.

Q. What is the function of the button 77 shown near the top of the figure, this button here (indicating)? Is that a release for the coin controlled switch, so that the coin has to be in the machine before you can actually operate that switch?

A. Well, I will have to check that for a moment. That slips my mind.

Q. Perhaps I can aid you, Mr. Fishleigh, if you will look at the element 75, that hook mechanism over on the left—

446 A. I was trying to see where the patent referred to it.

Q. Its function, I think, is clear from the drawing, if you understand that it is a latch which holds the weight 73 in the lower position until the button 77 is pushed to release it, then the coin causes it to be pivot similar to the—

A. That is correct.

Q. (Continuing.)—similar to the illustration you gave this morning in pivoting a device?

A. That is right. Yes, that is correct. Even though the coin is dropped into the carrier 72, the lefthand end of the rod 70, as we see it in this figure, is held down by the latch 75, and will remain down and prevent the closing of the switch 67-69 until such time as the button 77 is pushed in.

Q. Is that the familiar button you see on beverage dispensing machines where you insert a coin and push the button and get your Coca Cola or whatever is being dispensed?

A. Well, it is on some, yes.

Q. What is the element 23, at the upper righthand corner?

447 A. 23 is a source of power.

Q. What is the element 10?

A. 10 is a main fluid supply source or container. The patent itself refers to it as a suitable reservoir tank.

Q. Is the element 83 a float valve? 83, 84, and 85, I guess we had better say.

A. Well, 83 is a float member and 85 is not a valve in the sense that we have been talking about, that is, something you turn on and off. It is, perhaps we would say, a regulating valve, but—

Q. If it were raised high enough, it would turn off, would it not, or does it appear in the drawing?

A. Well, my language is correct. In fact, it happens to be exactly what the patent says, the lower end of the rod 84 has fixed thereto a conical regulating valve 85.

As to your last question, that would depend upon the detailed construction.

Q. Diameter?

A. The diameters.

Q. What is the function?

448 A. And I suspect from the showing, that is the only showing I have on that are the drawings, Figures 1 and 5, and I don't think that it would actually shut it off. I don't think it contemplates shutting it off.

Q. In the absence of the structure which contains the valve we have just been discussing, in other words, if the tube 11 and the tube 14 were unitary, and there were no intervening parts, how would this device function?

A. Well, whenever the valve 18 was opened, some fluid would flow out through the valve 18. If the level of the liquid in the container 10 was toward the top of the container, a substantial amount might flow; and if the level of the liquid in the container were near the bottom of the container, a considerably less amount would flow.

Q. What would the effect of raising the tank 10 be on that function you have just described, in terms of perhaps several feet above the level of the dispensing nozzle 17?

A. Well, if that were raised several feet and the tube 11 and 14 were kept large enough, the amount of liquid

449 which passed through the valve 18 when the tank was full would be more than it would have been under the present situation; and likewise the lesser amount which would flow through the valve 18 when the tank was almost empty would be more than it would be with the tank empty as shown here.

450 Q. How much variation would there be in comparison to the arrangement we first discussed, when the nozzle 17 is not very far below the tank 10? How much variation over the operation, if you raised that tank a number of feet, percentagewise?

A. Well, it would depend, of course, upon the difference in head. If you—

Q. What would the difference in head be if we raised the tank as far as the variation is concerned in the head? In other words, if we raised the tank, Mr. Fishleigh, isn't it true that the variation in the level of the tank does not vary percentagewise, the actual hydrostatic head, nearly as much as when the tank is relatively close to the dispensing nozzle?

A. Oh, that is correct, yes.

Q. And because the hydrostatic head is measured from the actual discharge point—we can call either the valve 18

or this point here as the discharge point. In terms of head, it is a little different.

If this tank is up here, the hydrostatic head will be measured from up here down here, is that correct?

451 A. Yes, but that would depend, of course, on where we stopped. If we stop when the liquid was still in the tank but covering the tube 11, that would probably be true, what you say. But if, on the other hand, we ran the device until it was completely empty, then that difference would be still more because we would have the variation from point zero just above the valve to the very high point that you speak of.

Q. What is the purpose of this indicator here, Mr. Fishleigh, on the left side of tank 10?

A. That is a gauge to indicate how much material is in the container.

Q. In this particular instance, it would be normal to refill the container when that gauge showed empty, is that correct, in your experience?

A. Well, I haven't had any great experience with the use of coffee dispensing machines in automat units, but certainly that would be a warning signal. If a person looked at it and saw that it was down below, they might very well check on it.

Q. Would this mechanism be operable without this spring 20?

452 A. No, I think it would be necessary in this condition to have a spring 20 otherwise there would be nothing to close the valve.

Q. Would the accused machine, Plaintiff's Exhibit 40, be operable without this spring that appears on the model below the valve sleeve, resting against this guide plate?

A. It wouldn't operate as it is intended to operate. I haven't tried it.

Q. I direct your attention, Mr. Fishleigh, to—

By the Court: Let us recess at this time until tomorrow morning, at 10:15.

(Whereupon an adjournment was taken in the above entitled cause until 10:15 o'clock a. m. of the following day, Thursday, May 20, 1955.)

453 Chicago, Illinois,
Friday, May 20, 1955,
10:15 o'clock a. m.

Court convened pursuant to adjournment.

Present:

Mr. McCanna,
Mr. McKnight,
Mr. Pillote,
Mr. Allen,
Mr. Clement,
Mr. Voland,
Mr. Houghteling,
Mr. Bernat,
Mr. Kipnis,
And other Counsel.

454 And thereupon the following further proceedings were had herein:

By the Clerk: The case on trial.

By the Court: Are counsel here?

By Mr. McCanna: I will check, your Honor.

By Mr. Voland: Good morning, your Honor. Mr. Clement has been delayed and I wonder if we could have a short wait.

By the Court: 10:15, I said 10:15.

By Mr. Voland: Very well.

Here he is now.

(Thereupon the Court gave his attention to another matter on the call, after which the following proceedings were had herein:)

By the Clerk: Case on trial.

By Mr. Clement: Good morning, your Honor.

By the Court: Good morning.

CLARENCE T. FISHLEIGH, called as a witness on behalf of the Plaintiff herein, having been previously sworn and examined, resumed the stand and testified further as follows:

455 *Cross-Examination (Continued) by Mr. Clement.*

Q. Mr. Fishleigh, at the close of yesterday's testimony, I asked you a question about whether the mechanism of Zsoldos would be operable without the spring 20 and you answered:

"No, I think it would be necessary in this condition to have a spring 20 otherwise there would be nothing to close the valve."

I then asked you:

"Q. Would the accused machine, Plaintiff's Exhibit 40, be operable without this spring that appears on the model below the valve sleeve, resting against this guide plate?"

And you answered:

"A. It wouldn't operate as it is intended to operate. I haven't tried it."

Are you prepared to operate the accused machine, Mr. Fishleigh?

A. Yes. The accused machine is in condition for operation.

Q. May we have that demonstration at this time?

456 By Mr. McCanna: If your Honor please, is this intended as part of the defendants' case? I mean, is it our choice to operate that machine?

By the Court: What?

By Mr. McCanna: I was just wondering whether the operation of the machine would be considered part of the defendants' case or part of our prima facie.

By the Court: This is part of your prima facie unless you—

By Mr. McCanna: I think it is entirely satisfactory then, your Honor.

By the Court: What?

By Mr. McCanna: I think it is entirely satisfactory that we demonstrate it.

457 By Mr. McCanna: Let the record show that the machine is to be demonstrated by Mr. Lee.

By the Witness: I will demonstrate the machine.

By Mr. McCanna: Oh, that is all right.

By the Witness: The carton has been opened and the opening mechanism at the left, is similar to the opening mechanism on the CP machine.

I then slip the carton into the opener, the additional opener that runs along underneath the socket—or underneath the discharge nozzle, and when the carton is underneath the nozzle, I trip the switch.

The valve—nozzle, moves down into the carton and while it is not apparent here, from checking it previously and from checking on the small model of the valve, I know that the ball valve moves down part way with it and then the sleeve or discharge nozzle moves further down, opening the valve.

By Mr. Clement:

Q. What element in the accused machine, Mr. Fishleigh, corresponds to—and I am reading from Claim 1:

458 "a valve mounted on the container for dispensing fluid from the container into a receptacle"?

A. The ball valve corresponds to the No. 46, I believe it is, in the accused—or in the Mojonnier patent drawings.

The discharge nozzle has the opening in it and actually, the separation of those two parts, that is, the sleeve member or discharge nozzle from the ball valve, causes the opening of the valve.

In this instance, the actual opening occurs by moving the sleeve or discharge nozzle down to separate the two.

In the showing in the patent drawings, the ball valve is moved up, while the sleeve member remains stationary.

Q. What element in the accused machine corresponds to—I quote again from Claim 1:

"a solenoid mounted on said container for operating said valve"?

A. The solenoid which is marked 54.

Q. Is that mounted on the container, Mr. Fishleigh?

A. It is mounted, as I indicated yesterday, upon a bracket, which, in turn, is mounted upon the rod 18

459 at the rear of the machine, the same rod that the container is mounted upon, so that the whole forms one integral structure, although, as I pointed out yesterday, actually, it is not mounted directly upon the container, but indirectly by means of the rod and brackets.

Q. What element corresponds to—and again I am quoting from Claim 1:

"a member extending through said container for interconnecting said solenoid and said valve"?

A. The lever which is not, I believe, numbered on this model.

460 I believe it carried the number 7-F on the drawings which we referred to yesterday.

Q. Then we have, in your opinion, all of the elements called for in Claim 1, or at least the equivalent thereof?

A. Yes.

Q. There is no spring element called for in Claim 1, is there, Mr. Fishleigh?

A. No.

Q. Mr. Fishleigh, will you now demonstrate how these corresponding elements in the accused machine operate, and I am quoting from the claim:

"whereby a substantially constant volume of liquid is dispensed each time said solenoid is energized"

First removing the spring element, which is not called for by Claim 1. Perhaps it would be easier to merely depress the spring by hand so that it is no longer operable.

Will you do that, please? Will you remove the carton first?

Your Honor, he is now going to depress that spring so that it is no longer operable. Will you please do that,

461 Mr. Fishleigh?

A. If the mechanism opens and we should flood the place, it is your responsibility, is it?

Q. Is that what will happen, Mr. Fishleigh?

A. I don't know, but it might because with this particular arrangement I am not certain that—

Q. Perhaps we had better have a container underneath it.

How much water is in the tank, Mr. Fishleigh?

A. Well, I believe that the tank 14 is filled to the level that the float holds, and there is some in the tank 16.

Q. Would you please depress the spring?

A. (Witness demonstrating.)

Q. What is happening now, Mr. Fishleigh?

A. The pressure on the valve or the water on the sleeve member plus its weight is lowering the valve and opening it.

Q. So that the valve was immediately in operation as soon as you in effect removed the spring?

A. That is correct.

Q. It fell to the open position?

A. That is correct. That is true in any case in

462 which when a valve is opened it is opened with the

force of gravity, and requires then something more than the force of gravity and the force acting upon it to close it.

Q. But the valve would normally be in the open position continuously if that spring were not present, is that correct?

A. That is correct.

Q. Without the spring we have all the elements called for in Claim 1, according to your previous testimony, but the claim obviously covers an inoperative device under this interpretation, does it not?

A. Oh, I don't think so. I think actually, if we are going to get to that technicality, that the spring is a part of the operating member of the valve operating member, and I don't think that is inoperative at all.

Q. If we have all the elements called for in Claim 1 in the accused device, without including the spring, as you previously testified, and these elements don't form an operable combination, how can you say that the dis-
463 pensing portion of the device in the accused device is the equivalent of that called for in Claim 1?

A. Well, I have no difficulty on it at all because, as I have said, if we wish, to that extent we can include the spring with it. I hadn't listed it as such, but certainly that is part of it.

464 Q. Mr. Fishleigh, would you return to the stand, please?

A. Sure.

(Witness resumed the stand.)

By Mr. Clement:

Q. Will you please refer to the model we have marked Defendants' Exhibit 10 for identification, which is on your left?

A. Yes.

Q. Will you please remove the bottom end of the two springs on the sleeve operating the linkage from their retaining posts?

A. Yes.

Q. Now as I understand it, you contend that in this form of the valve shown on this Exhibit 10, which is the form on the accused machine, except a variation in the linkage, that the linkage is the equivalent of "member extending through said container" in Claim 1?

A. May I have that question again?

By Mr. Clement: Read the question, please.

(Whereupon the question was read as above recorded.)

By the Witness: I have just a little bit of
465 difficulty in that in that you suggest that in this model, which is the same as except for the linkage, that the linkage is thus and so.

By Mr. Clement:

Q. Well, you testified to this model yesterday, I believe, Mr. Fishleigh.

A. That is correct, by way of showing the operation of the valve member and its sleeve.

Q. Do you regard that linkage as the equivalent of the rod extending through the container?

A. Well, I haven't checked that as to where it operates or how it operates, but I do the one on the accused machine, at least.

Q. Can you examine it now?

A. I think that I would say that by way of mechanical equivalent, it would provide a response to that claim; that the art and the proceedings were such as to not, in my judgment, limit it to a specific rod that did actually go through the container. That is, it does not go through the container, and that of course is the point. As to whether that is an equivalent, in my judgment it is not a sufficient change or departure to avoid the clear spirit of the invention, the clear spirit of the element, and permit one to
466 enjoy the advantages of the patent without coming under it.

Q. When the solenoid is energized by the timer in this form of the device we are now considering will it:

"thereby move said member to open said valve"

and we have already indicated that said member is the equivalent of the linkage, or rather that the linkage is the equivalent of said member.

I will ask again, when the solenoid is energized by the timer, will it thereby move said member to open said valve?

A. Well, I have no solenoid here, but assuming that when the solenoid is energized it does what I am now doing, I would say yes.

Q. Mr. Fishleigh, since you have removed the two springs a moment ago that normally keep that sleeve in the upper position, isn't the valve already open and spewing forth liquid as just happened on the other model of the accused machine?

A. Oh, you are assuming that we have mutilated or modified the structure as it was before we start. If the valve is open, of course—

Q. M. Fishleigh, I am not assuming that. I am
467 assuming that the spring is not a part of the valve. The spring is a separate element. We have taken the spring off.

A. That is not the accused structure then.

468 Q. It is my understanding that you say that the spring is not a necessary part of this device from the standpoint of equivalencies, so I have removed the spring.

A. I don't think I go that far. I have not included certain pins in it either, and certain other specific details which go as a natural part. I certainly would not say that in this operation that if you take the springs off, that it operates the same way.

Q. When you take the springs off of this form, however, it operates in the same way that this one would operate if you took the spring off over here?

A. That is right. That is correct.

Q. Do you still maintain this valve is the equivalent of the structure defined in Claim 1?

A. The valve?

Q. Yes.

A. The structure defined where? I haven't said anything was equivalent of the structure defined in Claim 1. I have pointed out certain things that, in my judgment, were the equivalent of certain mechanical elements in Claim 1.

469 Q. You said yesterday you regarded this valve as the equivalent of the valve in the plaintiff's machine, is that correct?

A. That is correct.

Q. Returning to the Zsoldos patent, Mr. Fishleigh, was it cited as a reference by the Examiner?

A. No.

Q. Does Zsoldos have time controlled flow—and I refer to Column 1, page 1, line 31, and ask you to read that paragraph.

A. Column 1?

Q. Column 1, page 1, line 31.

A. (Reading):

"The elimination of the measuring receptacle is accomplished in the present invention through the dispensing of liquid through a time controlled valve of novel and

efficient construction and preferably entirely electrically controlled, so that the amount of liquid dispensed is governed entirely by the time which elapses between the opening and closing of the dispensing valve."

Q. Does Zsoldos describe an electrically operated
470 timer—I refer to Column 2, page 1, line 62, and ask you to read that.

A. Shall I read that?

Q. Yes.

A. (Reading):

"In carrying out the present invention, other novel and efficient means and mechanism are employed, among which may be mentioned improved motor operated cam means for controlling the elapsed time of the dispensing operation, through the manipulation of switches electrically connected with the dispensing valve and this motor operated cam means is, in turn, controlled by further electrical means adapted to render the cam controlled means operative or inoperative depending upon the introduction of a coin into the machine."

Q. Now will you read page 4, column 1, starting with the paragraph at line 19.

A. (Reading):

471 "In a machine, wherein the amount of liquid dispensed is governed by the elapse of time of flow, I have found that in order that the amounts of liquid dispensed may be uniform at all times, it is necessary to incorporate in the construction, means adapted to compensate for the varying hydrostatic pressure due to varying amounts of liquid contained in the reservoir."

Q. Continue, please.

A. (Reading):

"When the reservoir is full, the hydrostatic pressure therein is considerably greater than when the reservoir is almost empty, so that liquid will flow faster and under greater pressure in the first instance than in the latter instance, with the result that more liquid may be dispensed from a full reservoir within a given period than could be dispensed from an almost empty reservoir within the same time. There is, accordingly, incorporated in the ma-
472 chine of this invention means for automatically compensating for the varying hydrostatic pressure and this means is best shown in Figure 5 of the drawings."

473 Q. Mr. Fishleigh, Mr. Zsoldos was obviously fully aware of the desirability of a constant hydrostatic head, was he not, from your reading of that last paragraph?

A. Well, at least he was fully aware that if he did not have it that he would have difficulty maintaining a uniform flow.

Q. Was Zsoldos dealing with small batches of fluid or large or continuous supply?

A. Well, he was dealing, in terms of amount, he was dispensing a fairly large batch. That is—

Q. A fairly large batch, you say?

A. Yes.

Q. Would you regard it in the terms of reference we are using here in this art, would you regard this coffee urn as a fairly large batch?

A. Well, certainly not nearly as large as we are using in other situations, but in the—

Q. Thank you. He was therefore compelled to compensate for this changing head rather than eliminating it, was he not?

A. No.

Q. Why not?

A. Well, he did do it, but he wasn't compelled to 474 at all.

Q. If he was working with relatively small batches of liquid, obviously he couldn't solve a problem by maintaining a constant hydrostatic head because he had no source of supply to maintain that head, isn't that correct?

A. No.

Q. How did he compensate for the changing hydrostatic head?

A. He attempted to compensate for it by providing a float controlled regulating valve.

Q. Is that No 85?

A. That is just what I am looking for. Yes, mechanical regulating valve 85.

Q. And as the head of the fluid drops in the container 10, what happens to that valve?

A. Well, the theory of it is that—

Q. I just want to know what happens to it, Mr. Fishleigh.

A. Well, the valve goes down.

Q. And what does that do to the orifice at that point?

What does that do to the orifice at that point?

475 A. To the extent that it goes down, it opens the orifice.

Q. Will you please read Claim 10 of Zsoldos, Mr. Fishleigh?

A. (Reading):

"A liquid vending machine embodying a liquid reservoir provided with an outlet, a normally seated valve for normally precluding the flow of liquid from said reservoir, electromagnetic means for unseating said valve, and electric circuit embodying a switch for energizing the electromagnetic means to unseat the valve and permit the flow of liquid, and means, controlled by an intended purchaser, for effecting the closing of said switch and the maintaining of said switch closed, for predetermined periods, during which the liquid is dispensed."

Q. Does this describe and claim a device substantially identical to that shown in the chart which we have just put up, in that it does not have the variable orifice compensating valve 85 and the associated parts?

476 A. Subject to the right to change that if, upon further examination I find I am wrong, at a glance it appears to be correct.

Q. Zsoldos' obvious starting point then was a mechanism as shown on this chart without the variable orifice compensating valve 85, is that correct?

A. I don't know that it was his starting point. That seems to be what he was describing in Claim 10.

Q. Well, he certainly wouldn't have sprung full blown with the idea of a compensating valve if he hadn't first had this much, would he?

A. I couldn't say.

Q. Now, Mr. Fishleigh, is this then a fair representation of the device described in Claim 10 of Zsoldos, this chart?

A. As I said before, as far as I can see just at a glance, I would say yes.

Q. I believe we have already concluded from reading the specification just a moment ago that Zsoldos had knowledge of the fact that for a fixed period of dispensing time, a decreasing hydrostatic head created a decrease in the volume of flow?

A. Yes, I think that is correct.

Q. Likewise we have also concluded that Zsoldos was not dealing with—well, we haven't concluded that he

477 was dealing with a small batch, according to your testimony, but if we had concluded that—well, strike that. Do you think it would be obvious to anyone skilled in the dispensing art, such as is represented by Zsoldos, if he did not have this limitation of a small batch supply, and

assuming for a moment that he did have the limitation of a small batch supply, do you think it would be obvious to anyone skilled in the art to add a float valve to tank 10 as shown in this chart?

A. Did you finish that question?

Q. Would you like me to repeat it?

A. Yes, please.

(Whereupon the question was read as above recorded.)

478 By the Witness: No. Perhaps I should define it a little bit, if you care to have it.

By Mr. Clement:

Q. No. I will just ask you, Mr. Fishleigh, wouldn't eliminating dropping the hydrostatic head have been the easy way out of the problem?

A. Yes.

Q. Thank you.

By Mr. Clement: Your Honor, I think we better identify this chart, for the purpose of identification.

I will identify it as Defendants' Exhibit 11.

(Thereupon said chart was marked Defendants' Exhibit No. 11 for identification.)

By Mr. Clement:

Q. I direct your attention now, Mr. Fishleigh, to the Searing number 1,613,248 and figure—the only figure on that patent.

Do you have it?

A. Yes.

Q. And I ask you if a constant hydrostatic head
479 has been achieved in the container A?

A. A constant level of liquid has been achieved there.

Q. What is the difference?

A. It would produce a—

Q. The difference between a constant hydrostatic head and a constant level of liquid?

A. Well, a constant level of liquid refers, as suggested, to the top of the liquid.

A constant hydrostatic head is a relative term, as between that and some other point, and depends—

Q. Mr. Fishleigh, is there a constant hydrostatic head in this container A between the dispensing valve on the left of the bottom of the tank and the level of liquid W?

A. I think so.

Q. Even if hot water is intermittently withdrawn from the tank A, the head in the tank A will remain substantially constant, will it not?

A. That is correct.

Q. Mr. Fishleigh, I direct your attention to the file history of the original patent and particularly page
480 45 thereof and ask you to read the paragraph beginning with "Claim 14 is rejected".

A. (Reading):

"Claim 14 is rejected on the patent to Thompson cited above taken with the patent to Kohr of record. It is obvious that the float control means of Kohr could be used in the tank of Thompson."

Q. Will you please refer to the Kohr patent number 1,553,385. How does the valve differ from the valve 24 shown in Figure 3 of the patent in suit, and I am speaking of differences taken from the patent in suit and from Figure 3.

It is the upper valve—I beg your pardon. This is taken from the Fagan-Mojonnier patent. Mr. Mojonnier was also the inventor of that one. I ask again, how does—

A. You have lost me.

Q. All right. How does this valve in the Kohr patent differ from the valve 24 shown in Figure 3 of the patent in suit?

A. It is quite similar to it in its particular opera-
481 tion, differing in some details of the shape of the float and the shape of the valve.

This one has a conical type valve member, whereas Figure 3 of Mojonnier has a flat disc type.

482 Q. I refer you to the paragraph again in the file history, the paragraph preceding the paragraph we just read.

A. What page was that?

Q. 45. And I will ask you to read that paragraph.

A. (Reading:)

"Claims 3 to 7 and 9 to 12 are rejected on the patent to Warren cited above taken with the patent to Ashkenaz of record which shows the time operated valve that could be used with the Warren dispenser without involving invention. The Warren patent shows a supplementary tank 27 for maintaining a constant level and constant hydrostatic pressure by means of a float valve."

Q. The Warren patent, you will recall, contains a dis-

closure of a dispenser having a constant hydrostatic head, maintained by a float valve. In the specification, it speaks of that.

I will ask you to refer to the Ashkenaz patent referred to by the Examiner, No. 2,254,833.

A. I didn't get it.

Q. No. 2,254,833.

483 A. Oh, yes, I have it.

Q. That was also just referred to in the Examiner's statement you just read?

A. That is right.

Q. I refer you particularly to Figures 1 and 2. Is there a constant hydrostatic head in this dispensing mechanism, best shown, I believe, in Figure 2?

A. No.

Q. On what do you base that answer?

A. Well, my understanding of the operation of such devices does not provide for what I would consider a constant hydrostatic head in the sense we are discussing it here.

Q. Mr. Fishleigh, you will note the cup form of the container 75 immediately below the bottle?

A. Yes.

Q. You will notice there is a level of liquid in that cup maintained by the outflow of the liquid from the bottle. When the liquid drops in the cup, is it not replaced by liquid flowing out of the bottle?

A. I note it is shown there at a constant level, but, as I say, I have some familiarity with such operation and

484 it would not maintain a constant head, normally.

Q. Mr. Fishleigh, would it maintain a relatively constant level?

A. No.

Q. Mr. Fishleigh, are you familiar with the common office water cooler with the bottle projecting from the top?

A. In a general way, yes.

Q. If you are not, there is one in the jury room back here. It is of similar construction in the sense that the bottle fits in a container which has a level of liquid in it which normally is at the bottom of the bottle.

In other words, as the liquid drops below the bottle opening, liquid will flow from the bottle into the container and that is what the bubbles are that go up in that bottle when you dispense liquid from an office cooler of that kind, is it not?

A. That is correct. But, in saying "that is correct," I am saying it only as to the bubbles. I am not in any sense agreeing with the previous statement that you have been making about it.

485 Q. Is the amount of liquid that is dispensed from the bottle commensurate with the bubbles coming up? In other words, is the air replacing the liquid that flows from the bottle?

A. That is correct.

Q. Does Ashkenaz disclose an electrical timer, and I refer you particularly to 24 in Figure 1?

A. Yes.

Q. Is it an electronic timer governing the opening and closing of a solenoid operated valve? I refer to element 60 in Figure 2.

A. That is correct.

Q. Is this the combination, namely, Warren and Ashkenaz which Mr. Mojonnier overcame by presenting the specific limitations as to Claim 1, as we have previously discussed?

In other words, was his response to this rejection of the Examiner on Ashkenaz and Warren in addition to those limitations to Claim 1?

A. Well, I think that there was an amendment made. As to that, I would have to check to see.

Yes, there were some amendments made. I think they are the ones we read yesterday, I believe it was.

486 Q. I refer you, Mr. Fishleigh, to the file history of the reissue patent, page 18 of the file history.

By the Court: Suppose we take a short recess.

(Whereupon a short recess was taken, after which the following proceedings were had herein:)

By the Court: You may proceed, gentlemen.

By Mr. Clement:

Q. Mr. Fishleigh, I just called your attention to page 18 of the file history of the reissue patent and particularly to the second paragraph of this first rejection.

Would you please read that second paragraph?

A. (Reading:)

"A float operated means as claimed in Claim 8 for maintaining a constant level is a well known expedient and is shown in the patent to Thompson."

Q. Mr. Fishleigh, let us turn now to the reissue patent in suit. Do you have a copy?

487 A. Yes.

Q. I believe you have mentioned that the valve 46 closes by gravity, is that correct?

A. By gravity and, to some extent, by the pressure acting on it by the liquid, the flow. At least, that would tend to close it.

Q. Mr. Fishleigh, would the valve be operable if it were mounted on the side of the tank so that the rod 62 was closed horizontally instead of vertically, as shown in this rough sketch here (indicating)?

A. It would need some means to close it, of course.

Q. And what would your answer be as to this shown in this rough sketch (indicating), this form, the device with the horizontal rod?

A. I would feel that that needed some means to close it, to overcome the absence of the gravity, although the force of the liquid would tend to close it. And, depending on the shape—as you show it there, it might close it.

Q. Do these two forms fall within the scope of the claim, claim 1, that is, of the reissue patent?

488 A. I think I would probably feel that there was an equivalency there, yes.

489 Q. Then with respect to the valve member and the rod interconnecting the valve with the solenoid, Claim 1 defines an inoperable structure, does it not?

A. No.

Q. Well, you just said these were within the scope of the claim, so the claim must define two inoperable structures.

A. Well, I can't agree to that at all.

Q. How does the valve shown in Figure 5 of the reissue patent, close, Mr. Fishleigh?

A. No specific means is shown there for closing it. There might very well be a spring means inside of 88 or—

Q. There is no mention of the spring anywhere in the patent, Mr. Fishleigh.

A. No, there is not.

Q. Is this form of device covered by Claim 1?

A. Speaking now of the—

Q. The form shown in Figure 5.

A. Of the valve member and the solenoid and the rod?

Q. If you wish to limit your comments to that, yes.

A. Well, I don't wish to. I just want to know what

you mean and we will have to go down the line, ele-
490 ment by element.

Q. Let us refer only to those elements which you just mentioned.

A. I believe that is true. In term, as I have pointed out with the defendants' or the accused device, in term the rod 91 doesn't go through the tank as calls for in that plan.

Q. What if the solenoid 88 shown in Figure 5 were mounted so the rod 91 slanted downwardly from rod 87? That would still be within the scope of the claim we have been discussing?

A. If it what?

Q. If the valve shown in Figure 5 had a rod 91 on it which slanted downwardly away from the valve rather than upwardly away from the valve as shown in Figure 5?

A. I don't think that would have any particular bearing on it.

Q. The valve would close, would it?

A. Well, provision would have to be made to close it. That is, if you had no means for closing it, to replace the force of gravity, then it wouldn't close, of course.

Q. Is there anything in Claim 1 which teaches how
491 to mount the rod so that it will operate under the force of gravity?

A. Well, Claim 1 suggests or provides that—I think, just glancing at it—no.

Q. Is it still your contention, Mr. Fishleigh, that the language:

"a member extending through said container for interconnecting said solenoid and said valve"

covers the defendants' valve?

A. I can only say what I said before, that in term, it doesn't read upon it in term, but I believe that the structure, such as you have, is close enough to it and performs the function of it so that in my judgment it is a mechanical equivalent of that element.

Q. Mr. Fisheigh, I refer to the next element, I believe, in Claim 1:

"an interval timer for controlling the energization of the solenoid"

According to the definition of the claim of the timer, could it be any form of timing mechanism?

A. Yes, any form of mechanism which would function

in the same way, so as to be a reasonable mechanical equivalent of what is shown in the patent.

492 Q. I wonder if you would examine the claim, Mr. Fishleigh, and read the next element following the timer, beginning with:

"means to actuate said timer"?

A. May I have the chart that shows Claim 1?

"means to actuate said timer to energize said solenoid and thereby move said member to open said valve"—

Q. Is there any—

A. (Continuing):

—"* * * whereby a substantially constant volume—"

Q. That is all right. Excuse me. May I ask the question?

Is there any mention there of a means for closing the valve or a reference to how it is closed?

A. No.

493 Q. I believe it is your contention, Mr. Fishleigh, that this claim reads on the accused device.

A. I didn't understand.

Q. It is your contention that this claim 1 of the reissue patent reads on the accused device.

A. Well—

Q. Yes?

A. I have given no such contention. That is out of my scope. I have given—

Q. Let me rephrase the question. It is your contention that the accused device has all of the elements as you believe they are defined in claim 1?

A. Yes.

Q. And claim 1 doesn't include a spring for closing the valve, does it?

A. No.

Q. Or any means for doing so?

A. No.

Q. Then it reads on the accused device with the spring removed, or rather, the accused device without the spring has all the elements defined in claim 1?

A. Well, certainly there is no spring or such

494 means specifically defined any more than there are certain nuts and bolts and pins.

Q. Isn't this then in the form of an inoperable device upon which the claim reads?

A. No.

Q. Please read Paragraph 1 of the reissue patent Mr. Fishleigh.

A. (Reading):

"This invention relates to mechanisms for dispensing milk, whipping cream, beverages, syrup, paint, shellac, hand lotion, cosmetics, insecticides, powders, drugs, and other free flowing fluids and comminuted materials, and more particularly to mechanisms for dispensing such free flowing materials into containers."

Q. According to that paragraph then beverage dispensing devices as a class are pertinent to this device in suit then, are they, as prior art?

I call your attention to the word "beverages" in the second line.

A. Well, beverages are listed there.

Q. Is the Zsoldos patent then just as pertinent as all the milk filling devices we have discussed at length, as far as it is from an analogous art or not, is concerned?

A. That I think I am not in position to answer because while this machine—

Q. All right, if you are not answering, that will be sufficient, I believe.

How does the device shown in Figure 3 dispense powders?

A. I don't think that the device shown in Figure 3, which is a preferred form of the invention, specifically directed to—

Q. Is there a form which will dispense powders disclosed?

A. May I finish?

Q. Excuse me, I thought you were finished.

A. (Continuing)—specifically directed to liquids would satisfactorily dispense powders.

Q. Is there a form shown in the patent drawings which would satisfactorily dispense powders?

A. None shown for that purpose and I don't believe—oh, I think you might use Figure 5, but I have my doubts about it.

Q. How would the float valve—oh, excuse me, Figure 5 does not have a float valve. You would have to have a powder that was electrically conductive, I presume.

A. That is correct.

Q. Like graphite?

A. That is correct. As I say, I have some doubt that any of the figures shown here would cover or satisfactorily handle powder.

497 Q. And that is primarily because the float valve wouldn't work?

A. Well, no, because of any means shown here for maintaining a constant head or constant pressure, and likewise the question of the outlet valve.

Q. Would the float valve work with powders?

A. I don't think so, no.

Q. It is a little like a pipe loading grain into a wagon, isn't it Mr. Fishleigh? The end of the pipe has to be kept free so the grain won't back up in the pipe?

A. That is correct.

Q. You mentioned a snap action with reference to valve 44, I believe, in Figure 3, yesterday. Is there any mention of that in the patent?

A. Those words? No.

Q. The snap action?

A. No.

Q. Is there any mention of anything that qualifies it as snap action?

A. Yes. It is described as a solenoid operated valve and inherently solenoid operated valves are of the snap action type, at least as far as I know of them.

498 Q. Would you get snap action with powders?

A. What was that?

Q. If you had powder in the dispenser, would you get snap action?

A. Well, if I had powder with a valve such as Figure 3?

Q. Yes.

A. No.

Q. I refer you now to Claim 6, Mr. Fishleigh, of the reissue patent, which is one of the claims here at issue. This claim was allowed on the reissue application.

Please read the definition of the first element in the combination defined in this claim.

A. I don't quite understand. You want me to read the first element?

Q. Yes, please.

A. (Reading):

"a relatively large main fluid supply tank"

Q. Is there such an element of the combination in the accused machine?

A. I would say yes.

Q. What is that element?

499 A. It is the element which is shown on the drawings which—

Q. I have reference to the machine itself.

A. You mean the particular machine that is here in court?

Q. No, the machine that was stipulated as being the infringing machine, that which was sold by the Brasile group of corporations.

A. Well, I know nothing about that as such. My information—

Q. You made quite a point yesterday, Mr. Fishleigh, of the fact that that tank was shown on the drawings, and therefore it must be a part of the accused machine.

I am asking you if you have personal knowledge as to whether that is part of the accused machine or not.

A. My knowledge is limited to the drawings which were submitted as representative of the machine and the machine which is here in court, Plaintiff's Exhibit 40, without the tank on the top. I have never seen one of the accused machines in operation.

Q. Those drawings were submitted to you by whom?

A. Well, they came to me by Mr. McCanna. He 500 told me he had come directly from your office with them.

Q. And on that drawing was not the fragmentary showing of the tank that you mentioned dotted in, in pencil?

A. That is correct.

Q. It was not a part of the original drawing, as far as you know, the original print?

A. Oh, as far as I know—

Q. It was dotted in, in pencil, on the print, is that correct?

A. It was not dotted in in pencil upon the photostat.

Q. You didn't see the original print? You saw a photostat?

A. I saw the photostat which was brought to me, which I understood you furnished to Mr. McCanna for my purposes. That is, I asked for it.

Q. What is the next element of Claim 6, Mr. Fishleigh?

A. (Reading):

"a fluid supply container having a fluid capacity substantially smaller than said main supply tank and larger than

the quantity to be delivered in filling said individual containers."

501 Q. This is really the principle of the pitcher, is it not? If you are filling a plurality of glasses, you want a pitcher that has a capacity greater than one glass, don't you?

A. That is correct.

Q. And what is the next element?

A. Now may I qualify that? I have answered the last part of it, that you want a pitcher greater. I cannot agree with you that this complete element is on the principle of a pitcher.

Q. Well, I was referring to the principle, not the element.

A. Sir?

Q. I was referring to the principle, not the element. I said it is the principle of the pitcher. You would like to have a container to fill glasses that is larger than one that will fill only one glass, is that right?

A. To that extent I quite agree with you.

Q. What is the next element, Mr. Fishleigh?

A. (Reading):

"a bottom delivery outlet having a given orifice factor and area of orifice, through which outlet orifice the

502 fluid freely flows by gravity"

Q. What is the significance of the word "given" in the phrase "a given orifice factor"?

A. I think they have perhaps a twofold meaning. I interpret it more in the sense of a constant orifice factor and area of orifice, although if one were planning a machine and started first with a hydrostatic head and time, you might want to calculate it to get a specific one. But I look at it as a constant orifice factor.

503 Q. Would any orifice that is in a piece of thin metal fit within that terminology?

A. Yes.

Q. What is the next element, Mr. Fishleigh?

A. (Reading):

"a valve in said bottom outlet operable between an open position in which the fluid flows for delivery into an individual container positioned beneath and in filling coaction with said outlet and a closed position for stopping said flow".

Q. What is the meaning of the words "filling coaction" in that phrase?

A. I think it means that the container is positioned under the outlet in such position that it will be filled by the valve or by the flow, rather.

Q. Is it actually in coaction with the outlet?

A. In the sense of contact, no.

Q. What is the next element, Mr. Fishleigh?

A. (Reading):

"means operable to deliver said fluid from said main tank to said fluid supply container and to maintain a
504 substantially constant preselected hydrostatic head of the fluid in said supply container, said hydrostatic head having a predetermined value with relation to said orifice factor and area of orifice whereby to effect controlled relatively rapid continuous flow of the fluid from the supply container to the said individual container when the latter is in said filling position".

Q. What does the term "preselected" mean in the phrase "preselected hydrostatic head"?

A. Well, I think it means that you don't just take any old head, but that you take one which will cooperate properly with the valve to give the flow that you desire.

Q. That is something any designer of a dispensing mechanism having an orifie would take into consideration, I presume? He would make a selection, would he not?

A. If he were building one of these machines?

Q. Yes.

A. Well, I think that is true, if he were building
505 one of these.

Q. What is the meaning of the clause

"said hydrostatic head having a predetermined value with relation to said orifice factor and area of orifice whereby to effect controlled relatively rapid continuous flow of the fluid from the supply container to the said individual container when the latter is in said filling position"?

A. We just talked about the predetermined hydrostatic head.

Q. Yes.

A. The desire, of course, is to fill as rapidly as possible.

Q. Is there any disclosure in the specification which specifies the meaning of the phrase

"predetermined value with relation"

to the hydrostatic head?

A. In specific terms, no. Relatively, as shown in the

drawings, it indicates quite clearly that it is a relatively low hydrostatic head.

Q. Is there more than one hydrostatic head shown in the drawings?

506 A. Yes.

Q. Does the machine shown in the patent include any arrangement or disclosure for adjustment of the distance the tube 27, as shown in Figure 3, projects downwardly into the container?

A. No.

Q. Is there any disclosure in the specification of what the predetermined value of the hydrostatic head with relation to the orifice factor should be?

A. Well, there is no specific mention at all.

507 Q. Is there any disclosure in the specification of what the predetermined value of the hydrostatic head with relation to the area of the orifice should be?

A. No specific relations are given.

Q. Is there any disclosure in the specification which teaches how to effect a relatively rapid flow of the fluid?

A. The specification taken in conjunction with the drawings, I believe, teaches that quite reasonably, as well as the question of height and orifice areas.

Q. What is the next phrase, Mr. Fishleigh, in the claim?

A. (Reading):

"a timer for controlling the operation of said valve"

Q. And the next phrase?

A. (Reading):

"said timer having a starting switch and operating to control a continuous uninterrupted time period in response to the initial actuation of said switch"

Q. Does the claim specify that the timer controls the valve to hold it open continuously throughout a time

508 period?

I am sorry, I believe that is in the next phrase which we haven't read.

A. Yes.

Q. Does the valve, and I am speaking now of the valve stem in the accused device, remain open for the time period that is predetermined by the timer?

A. May I have that again? You lost me.

Q. Does the valve in the accused device remain open continuously throughout the predetermined time period?

A. I would say yes.

Q. Isn't part of that time period the movement down-

wardly of the sleeve and the valve together when they are not open, when the valve is not open?

A. Well, that is correct. From a purely theoretical standpoint that is correct.

Q. Theoretical?

A. Yes.

Q. Isn't it a fact?

A. Well, it is a very fast element and it is a negligible period of time.

Q. But it is not open continuously during that time period that is measured by the timer?

509 A. Well, I said yes.

Q. You say yes?

A. Yes.

Q. You previously indicated, I believe, that the specification does not actually teach how to get rapid filling, is that correct?

A. It does not give you dimensions in numbers that you have a certain head and a certain sized orifice, but it does, taken in conjunction with the drawings, certainly indicate that.

Q. Would you read element 8, Mr. Fishleigh?

A. Element 8 as I have it outlined?

Q. Yes, on your chart.

A. (Reading):

"said timer controlling said valve to continuously hold open said valve throughout said time period whereby to deliver said predetermined flow and quantity of fluid in a single complete operation to each said individual container and whereby the preselected constant factors of said hydrostatic head in the supply container and said orifice delivery produce relatively rapid filling of said indi-
510 vidual container and control of splash effect of the fluid in its discharge into the said individual container."

Q. Is there any antecedent for the phrase "said orifice delivery" or perhaps I should say the phrase "orifice delivery"?

A. Yes, I think so.

Q. In the claim?

A. Yes.

Q. What is the "said orifice delivery"?

A. Well, up in element three we have a bottom delivery outlet having a given orifice and area of orifice through which outlet orifice the fluid freely flows by gravity.

I had no trouble with it. I thought that was it.

Q. In other words, "said" would indicate, of course, that there was an antecedent that related directly to it, is that correct? Are you familiar enough with claim terminology to know that that would ordinarily be the fact?

A. Oh, ordinarily, very frequently, you might have used those exact words, but when you have used terminology which implies it,—I had no difficulty with it

511 until you raised the question.

Q. In the last clause that you previously read from the claim, it refers to control of splash effect of the fluid.

A. Yes.

Q. Is there any comment in the specification about that?

A. No.

512 Q. I refer you, Mr. Fishleigh, to the introductory portion of the specification, and one of the objects it mentions is, I think, splash effect, at the bottom of column 2, line 45.

A. Yes. I am mistaken on that. It is set up as one of he objects. I was thinking of the description of it.

Q. It is not mentioned anywhere else?

A. As far as I know, that is correct.

Q. I refer you to column 8, line 65, Mr. Fishleigh. I would like to have you read that, starting with "in some installations"—

A. (Reading):

"in some installations a number of dispensing units may be placed in a line so that each operates in succession to fill a receptacle. Where it is desired to control the splash in such an installation the pressure head (or liquid level) maintained in each dispensing unit may be progressively different for each dispensing unit."

Again my recollection was faulty. It is mentioned there.

513 Q. How would that arrangement control the splash?

A. Well, it is my understanding that the higher the head, the more likely a splash effect, and consequently if we—

Q. Is that—

A. Just a moment. In such an instance, if we had a container, an open top container, say, the first operation, if we were filling in successive units, each one a part of the container, as far as splash effect is concerned a greater splash could be tolerated at the bottom with the container

without causing trouble. As the container got filled up, we would want a lesser splash effect because otherwise it would splash over the top.

Q. Does the phrase of claim 6 that we have just been talking about define this kind of an arrangement, the arrangement we just read from the specification?

A. Well, I don't think that it limits itself at all to or contemplates a succession of fillers. I think it refers to the general problem that the amount of splash may be controlled by having a higher or lower head. I don't think it refers—

514 Q. Is there any teaching in the specification of that last fact?

A. I think that comes from the statement that you had me read, the last one in column 8.

Q. Oh, but, Mr. Fishleigh, we said that that arrangement wasn't the part of one machine. It is a plurality of machines, isn't that correct?

A. That is correct, but it indicates what you do to have a different splash effect in a different container, and if that works in a succession of eight in a line and you wanted to modify the first one, you would do it the same way.

Q. Would you read the element 8 in your chart again and see if that is talking about the same thing? Would you read it aloud, please?

A. The entire element 8?

Q. The portion immediately preceding "splash effect," where it says—

A. Where do you want me to start?

Q. Start with

"whereby to deliver said predetermined flow—"

A. (Reading):

"whereby to deliver said predetermined flow and
515 quantity of fluid in a single complete operation to each said individual container and—"

Q. Will you stop right there, "a single complete operation." We were not talking about that before, were we? We were talking about a plurality of fillers in a line, each with a progressively lower head as defined in the specification, each filling a portion of the container.

A. Well, that is what is being talked about in the section that I read from column 8.

516 Q. Would you continue, please?

A. That is not what is referred to in the portion I have just read from element 8 of this Claim 6.

"whereby the preselected constant factors of said hydrostatic head in the supply container and said orifice delivery produce relatively rapid filling of said individual container and control of splash effect—"

Q. Will you stop there, please?

"whereby the preselected constant factors of said hydrostatic head in the supply container and said orifice delivery"

That "said orifice delivery" is the term which we can't refer back to in the claims. There is no mention of "orifice delivery" in the claim preceding that.

A. Well, that is what you said. I didn't agree with you on that.

Q. I am talking about the term "orifice delivery."

A. That is correct.

Q. It doesn't occur in the claim preceding that, does it?

A. That specific term does not, no.

517 Q. Have you observed anything in addition to what is mentioned in the specification or claims which is incorporated in the plaintiff's machine to accomplish a control of splash effect?

A. Yes.

Q. What is that element?

A. The discharge nozzle, to the side of the nozzle in the plaintiff's CP machine, which I believe is Plaintiff's Exhibit 39. There is nothing of that sort in the machine, Plaintiff's Exhibit 37.

Q. I am pointing, Mr. Fishleigh, to the nozzle on Plaintiff's Exhibit 39 and I will ask you if the slot formed on the side of the termination of the nozzle is what you are referring to now?

A. Yes.

Q. Is that disclosed in the patent?

A. No.

Q. Will you read the last phrase of the claim, please?

A. (Reading):

"said timer being adjustable to vary said time period and the predetermined quantity of fluid delivered to each individual container"

518 Q. Is it common practice to use an adjustable timer in the fluid dispensing field?

A. It is.

Q. With particular reference to the beverage dispensing field. It is, you say?

A. Well,—

Q. Was your answer "It is"?

A. I started—

Q. I didn't hear you.

A. Before you added the last, I started to say it is done in many instances, although I have seen a number of disclosures in the patents where that was not true.

Q. Referring to Claim 7 of the reissue patent, Mr. Fishleigh, it resembles Claim 6 in many respects. Is there anything in this Claim 7 which indicates how the valve is closed at the end of the time period?

A. Well, I think it indicates that the solenoid is de-energized.

Q. Is there any mention in the claim of the valve being moved under the influence of gravity?

A. No.

Q. Is this the same deficiency we previously dis-
519 cussed with reference to Claims 1 and 6—or perhaps you wouldn't call it a deficiency?

A. I hadn't understood that there was any deficiency, or that we had discussed any deficiency.

Q. At least, it is omitted from all three claims?

A. I would not say it is omitted.

Q. It is not included in any of the three claims, is that right?

A. There is no statement of closing by gravity, that is correct. I would not consider it as an omission.

Q. Now directing your attention to the parts of Claim 7 which differ from Claim 6—well, perhaps we had best just look at it generally.

Is there any basis in the specification for the statements in Claim 7 relative to the relationship between the hydrostatic head and the orifice factor and area of orifice?

I believe you mentioned or said there wasn't anything in the specification in connection with Claim 6, and has anything been added to Claim 7 which would change your answer with respect to Claim 7?

A. Well, there are still, of course, no specific values
520 given for those dimensions.

Q. Is there any basis in the specification for the statement in this Claim 7 that these factors effect the rapid flow of the fluid?

A. I said before that I thought there was, the general description and the general showing in the drawings.

Q. You say in the general description. Where are you referring to, Mr. Fishleigh?

I want to remind you that my question was, is there any basis in the specification for the statement in this Claim 7 that these factors effect a rapid flow of the fluid?

A. I don't find any specific reference to it, no.

Q. So that there is no teaching of the meaning that you can attribute to the language in Claim 7 whereby the preselected constant factors of said hydrostatic head and supply container and said orifice delivery produce relatively rapid filling of said individual container?

A. No specific reference to that.

521 Q. Is there any teaching of the meaning of that same phrase relating to the following clause, which says:

"and control of splash effect"

since we are talking about a single container, a single dispenser?

A. Well, whereabouts are we now?

Q. Well, it is just a continuation of that element.

A. Of which element?

Q. 10, in claim 7 toward the end.

We just mentioned that there was no teaching relative to producing relatively rapid filling. Now I am asking, is there any teaching relative to the control of splash effect as defined in this claim?

A. Yes.

Q. Where do you find that teaching?

A. In that column 8 that we referred to, that was teaching how to do it in a series of containers, but if you do it in a series of containers, it teaches how it can be done in a single container.

Q. Is that practice as is described there, one that can be carried out with any dispensing machine that has
522 a container in which you can vary the hydrostatic head?

A. It can be?

Q. Yes. Can't you set up a line of them and get the same effect? But you do have a plurality of them to accomplish that, as taught in column 8, don't you?

A. The principle is taught there.

Q. What is the principle that is taught there, Mr. Fishleigh?

A. What is that?

Q. What is the principle that is taught there, Mr. Fishleigh?

A. That you can vary the splash effect by varying the

head, or control, shall we say, the splash effect by controlling the head.

Q. In a plurality of containers?

A. In any container.

Q. Well, this teaching here in the specification contains a plurality of containers in a line, does it not?

A. It applies to that but it says if I have one condition where I have one container and a given head and I get a certain splash, that by taking another container or
523 the same container, it is the same thing; by changing the head, I get a difference in splash effect. It is applied here to a plurality of containers.

Q. Do these claims call for a constant head, Mr. Fishleigh?

A. Yes, so far as the particular one is concerned.

Q. Well, then, is there any teaching in the claim of this control of splash effect you are now talking about?

A. Not from one container to another, but in a general design, in the first place, yes.

Q. Well, I am talking about column 8 that you refer to as teaching and what is claimed.

A. Each one of those in the reference of column 8 would be a constant head.

Q. A constant head?

A. Yes, but, as between them, they would vary.

Q. I beg your pardon? Each one would have a constant head but as between them they would vary?

A. That is correct.

Q. They wouldn't have the same head?

A. That is correct.

524 Q. Oh, I see.

A. I am sorry if my language did not make that clear.

525 Q. You feel that that is the teaching in this claim, in this portion of the claim?

A. That what?

Q. You feel that that is the teaching of this portion of the claim in the specification?

A. I don't feel it is the teaching, particularly, but that is, in my judgment, what they are talking about.

Q. Even though the claim calls for a constant head?

A. Well, I don't understand that this claim refers to adjusting the splash effect from one container to another as you might adjust the length of time as to change from pints to quarts, shall we say?

I don't understand it as indicating that type of adjusta
bility. I understand it more as indicating a condition i
the original design of the machine.

Q. Mr. Fishleigh, will you read the last phrase of th
claim?

A. (Reading:)

526 "said timer being adjustable to vary said time perio
and the predetermined quantity of fluid delivered t
each individual container."

Q. There has been considerable emphasis placed upo
the fact that this device, as defined in this patent, is capa
ble of unusual accuracy in the volume of fluid dispense
is that correct?

A. I don't know about the "considerable emphasis.
That is a characteristic of it.

Q. What is one of the principal factors that must b
held constant in order to get anywhere near a constan
volume of dispensed liquid?

A. The hydrostatic head.

Q. What is another factor?

A. The area of the discharge orifice.

Q. How about the time limit of dispensing?

A. That is another factor.

Q. Assuming all the other variables were constan
were relatively constant, it would then be necessary to hav
a relatively accurate timer, would it not, to get a constan
volumetric flow?

A. That is correct.

Q. In your opinion, is the element 66 of the—exem
me—the element 66 which is the timing device ther

527 for, an essential element of the claim? I believe it
in all of the claims.

A. I don't qust know what you mean by "essential el
ment."

It is my understanding that any element in a claim
essential; from my point of view it is; whether it is legal
or not, I don't know, but it is there.

Q. Will you please read the paragraph starting wi
column 8, line 57, down to the end of the second sentence
column 8, line 57, down to the end of the second sentenc

A. (Reading):

"while in each embodiment of the invention there
shown only one dispensing nozzle or valve it is to be u
derstood that any number of dispensing nozzles or valv

may be used on a given dispensing container. These valves may be operated independently or may be operated simultaneously."

Q. Will you read the next sentence, please?

A. (Reading):

"The valves may also be operated manually by an
528 operator or by the receptacle being filled."

Q. If the device were to be operated manually, would there be a need for the timer?

A. In this—as I understand this, yes.

529 Q. It would?

A. Yes. I understand this to refer to the same situation that we have in the accused machine where they are—if I understand it correctly, that is what this was, that you operated it manually—not that you operate it manually as I am now operating the valve in this unit (illustrating), but that I turn it on manually, turn the switch on manually as I turned it on over there on the machine.

Q. The sentence says the valve my be operated manually. Would it not be clearer, if it meant that, to say the switch may be operated manually? They have just been talking about the valves operating independently or simultaneously.

A. Well, it might have been clearer. I wouldn't question that but I do not understand that in this patent which deals entirely with timed control, and automatic flow, that it refers to any scheme in which you would just operate the valve manually like you would with a pet cock on the bottom of the cider barrel. I cannot conceive that that is the meaning.

By the Court: I am going to ask you to recess at this time until 2 o'clock.

530 By the Marshal: This honorable court now stands at recess until 2 o'clock this afternoon.

(Thereupon at the hour of 12:10 a.m. on Friday, May 20, 1955, a recess was taken to 2:00 o'clock p.m. of the same day.)

531 Chicago, Illinois,
Friday, May 20, 1955,
2:00 o'clock p. m.

Court convened pursuant to recess.

Present:

Mr. McCanna,
Mr. McKnight,
Mr. Pillote,
Mr. Allen,
Mr. Clement,
Mr. Voland,
Mr. Houghteling,
Mr. Bernat,
Mr. Kipnis,
And other Counsel.

532 And thereupon the following further proceedings were had herein:—

By the Clerk: Case on trial.

By the Court: Proceed.

By Mr. Clement: Your Honor, I have just a few more questions for Mr. Fishleigh.

By the Court: Yes.

CLARENCE T. FISHLEIGH, called as a witness on behalf of the Plaintiff herein, having been previously duly sworn and examined, resumed the stand and testified further as follows:

Cross Examination (Ctd.) by Mr. Clement.

Q. Mr. Fishleigh, do both claims 6 and 7 define the valve and the orifice as separate elements?

A. Yes.

Q. Does the arm in the accused structure control the position of the orifice which is in the sleeve rather than the valve that is referred to in those two claims?

A. It controls both.

Q. Its primary control is on the sleeve, however?

A. I wouldn't specify primary and secondary. It
533 controls both.

Q. Well, the position of the value is controlled by the position of the sleeve, is it not?

A. That's correct, in part.

Q. Does the accused structure have operating means interconnecting said valve and said solenoid—excuse me—holding open said valve for a time period?

A. Well, I think it does. It has certainly a reversal of parts that in one case, in the patented structure, the solenoid operates directly to move the ball valve; in the second case it moves the ball valve and the sleeve for a way, and then moves the sleeve on, away from the ball valve.

Q. Does—

A. (Continuing.) I think that is—in fact, I thought that was a direct response, certainly by way of equivalents, if not a direct response.

Q. Is pasteurized milk stored in tanks, or does it go direct from the pasteurizer under pressure for filling, Mr. Fishleigh, do you know?

A. Well, I know that in certain instances, at least, it
534 goes into a cooler and then into filling. I am not familiar with the complete detail of it.

Q. Are you familiar with the Public Health regulations about pasteurized milk?

A. No.

Q. Is the construction of the valve of the accused device better adapted for the control of liquid fed under pressure as it would be directly from a cooler?

A. May I have that again?

(Whereupon the question was read as above recorded.)

By Mr. Clement:

Q. I have reference to the float valve, Mr. Fishleigh, the valve 30, as compared with the valve 24. At least, those are the float numbers.

A. Well, if I understand the question correctly, I think the answer is no.

535 Q. Mr. Fishleigh, I call your attention to the element 26 at the bottom of this tube 27 and if we had a head of pressure in this tube 27, what reaction will it produce on this element 26 that normally closes that valve when the float is riding high?

A. If there is pressure in that?

Q. If there is pressure in the tube 27, what effect will that have on the element 26?

A. Well, to whatever extent there is pressure, that

pressure multiplied by the area of the tube will determine the force that is being exerted on the valve tending to open it.

Q. Well, that is precisely what I was leading up to. The pressure in the tube 27 tends to open the valve, is that correct?

A. That is correct.

Q. Is that true of the valve in the accused structure, as illustrated in this chart?

A. No.

Q. Do you know if that feature is of considerable significance in the dairy industry or not?

A. I think it would be a nice design. I know noth-536 ing about its particular application to the dairy industry, as such.

Q. Do you know if the health departments prefer the type of valve that automatically moves into the carton as shown in the accused device instead of the type in the plaintiff's machine in which the carton must be manually raised for filling?

A. No. I have told you previously I know nothing about health department regulations or inspections or their preferences.

By Mr. Clement: That concludes my cross examination.

537 By Mr. McCanna: Your Honor, at this time I would like to introduce the charts that Mr. Fishleigh produced during his testimony. I would like to introduce them in evidence as Plaintiff's Exhibits 41 to 52, inclusive. I believe the first one was numbered Plaintiff's Exhibit 41-A.

By the Court: Any objection?

By Mr. Clement: No objection.

By the Court: They may be received.

(Said charts, so offered and received in evidence, were marked, respectively, PLAINTIFF'S EXHIBITS NOS. 41 through 52.)

By Mr. McCanna: May we have permission to put those loose charts together in a folder, the ones that have been placed up on your desk?

By the Court: Yes. Are they different?

By Mr. McCanna: No, they are no different. We just thought it would be more convenient to have them in a folder rather than loose.

By the Court: Very well.

538 *Redirect Examination by Mr. McCanna.*

Q. Mr. Fishleigh: I call your attention to the Fagan and Mojonnier patent No. 2,147,366.

A. Yes, I have it.

Q. I would like to ask you is it important or critical to the operation of the filler in that machine that the level of the fluid in the tank E be maintained at a fixed point?

A. No, it is not. So long as the level of fluid in the tank E doesn't drop below the bottom of the tubes 178 nor get up higher than, well, really higher than the bottom of the opening into the bottles, but preferably five inches or so below that, the device will operate quite satisfactorily.

Q. Now does the operation of the Fagan and Mojonnier machine depend on the hydrostatic head maintained in tank E?

A. No, it does not.

Q. Does the float F in the Fagan and Mojonnier patent completely control the level in the tank E?

A. No, it does not.

Q. Does the level in the tank E control the volume filled into each container?

539 A. No, it does not.

Q. Would you care to explain that?

A. Well, the volume filled into each container is controlled by the level of the bottom of the outlet 220, as we see it in Figure 16 of that patent, at a point somewhat below the top of the bottle, the top edge of the bottle. So the bottle is filled until the liquid reaches that point.

By Mr. McCanna: I believe that concludes our examination of Mr. Fishleigh.

By Mr. Clement: No recross, your Honor.

(Witness excused.)

540 By Mr. McCanna: I will call Mr. Mojonnier to the stand.

ALBERT B. MOJONNIER, recalled as a witness on behalf of the Plaintiff herein, having been previously duly sworn, resumed the stand and testified further as follows:

By Mr. McCanna: We would like to offer in evidence at this time some of these cartons and bombs that have been discussed from time to time. I believe they will be useful to the Court by reference as we go along.

I will offer as Plaintiff's Exhibit 53 a half gallon Pure-Pak carton;

As Plaintiff's Exhibit 54, an American Can one quart paper carton.

By the Court: Is that one quart?

By Mr. McCanna: Does it look rather small? After looking at this half gallon size perhaps.

By the Court: Hold that half gallon size up.

If you say they are, they are then.

541 By Mr. McCanna: And as Plaintiff's Exhibit 55, a Seal King one quart size carton;

As Plaintiff's Exhibit 56, a Colgate Barber Shave, so-called bomb;

And as Plaintiff's Exhibit 57, a Bridgeport Goodaire—that is the trade name, but it is an air refresher aerosol.

Do you care to inspect them?

By Mr. Clement: No objection, your Honor.

By the Court: They may be received. (The said articles, so offered and received in evidence, were marked respectively PLAINTIFF'S EXHIBITS NOS. 53, 54, 55, 56 and 57.)

Direct Examination (resumed) By Mr. McCanna.

Q. Mr. Mojonnier, in resuming your testimony, we left off with the question, will you recount your first contact with Mr. Brasile?

A. I first met Maurice J. Brasile at the plant
542 of the Oakside Dairy Company in Woodstock, Illinois in the summer of 1949.

He was operating the Model A Mojonnier—Dawson Electromatic filler for his Zimpak paper cartons, which our company had sold to the Oakside Dairy Company.

Q. Do you recall your next contact with Mr. Brasile?

A. I had several contacts with him during 1949, when

he was running that machine. My next contact with him was in 1951, I believe, when he was running on a more or less experimental basis another Model A Mojonnier-Dawson filler for Zimpak cartons at the plant of the Willow Farms Dairy at Atlanta, Illinois.

Q. Do you recall your next contact with Mr. Brasile?

A. The next contact I had with Mr. Brasile was in the fall of 1951. He came into the Mojonnier-Dawson office, bringing with him a Pure-Pak carton which was closed and stapled and sealed, but which had no milk inside it. It was the older type of Pure-Pak carton with the side lift tab.

543 He said that he was familiar with the Mojonnier-Dawson Electromatic fillers for paper cartons that were on the market at that time, particularly the one for Zimpak cartons, and the one for American Can cartons, and he suggested that I might be able to develop a machine incorporating the Electromatic filler which would open the lift tab on the side of the carton, fill milk through that opening, and then seal the opening by means of a heated shoe or some other means that he did not know about which might perform a satisfactory seal.

544 I made a special nozzle for one of our Electromatic fillers and filled experimentally in our plant a number of cartons by that method. I experimented with various types of heat shoes to seal the flap of the carton down after filling.

I achieved a fair degree of success in these experiments. I then called Mr. Brasile and suggested that he come in to look at the experimental machine which I had made.

He came in and brought with him a Pure Pak carton, in this instance a carton closed but not stapled. He told me that he had been observing the operation of the Pure Pak machines at the Willow Farm Dairy at Antioch, Illinois, where he was then employed, and that he had found that if he removed the jaws from the machine and removed the stapler, he could produce a carton which was temporarily closed, but which was not sealed and stapled.

He looked at my experimental machine for filling through the side opening tab, and thought it looked very good. He then suggested that it might be better to devise an attachment to my machine which would open this second carton which he brought in, filled and then closed and stapled.

545 I told him I would be happy to see what I could develop. I then made a different nozzle for one of our Electromatic fillers, and devised a means for opening the carton and filling it. I also devised a hand operated closing and stapling unit for the carton.

I believe that he was in to our plant once during that design to see how I was getting along. When it was finished I called him in and asked him to look at it.

He looked at it. He stayed there several hours during which time we ran quite a few cartons. I neglected to say that he brought the cartons with him from Antioch, Illinois.

He then asked me what move would be necessary to give him the exclusive distribution of that adaptation to the Mojonnier-Dawson Electromatic filler.

I told him that we would discuss it among ourselves and would let him know. I quizzed him as to what plans he had and how he could expect to sell these machines or how he could expect to obtain the cartons.

A number of conferences followed, concluding with the conference in, I believe, the early part of December,
546 1951, at the office of our general attorneys, Ross & O'Keefe, in Chicago.

At that time we told Mr. Brasile—well, I am getting ahead of my story. Mr. Brasile told me at that time that he had interested Mr. Polivka, Jack W. Polivka, the owner of the Willow Farms Dairy at Atlanta, Illinois, and also owner of the Willow Farms Dairy at LaGrange, Illinois, in the proposition, and that he, Brasile, thought he could sell the fillers while Polivka could supply the preformed cartons.

547 We then told him that if he could deposit the sum of $25,000.00 with our company as security, that they would be able to actually perform their part of the contract, in view of the fact that they had no company, no organization, no credit rating, no background of any kind in this business; that we would then proceed to tool up for the manufacture of this type of machine.

Actually, we had made most of the tooling by that time because we had, at that time, produced this first filling and closing machine which we christened Model CP.

Following this conference, a contract was entered into which gave Maurice J. Brasile and Jack W. Polivka the exclusive right to sell the Model CP Mojonnier-Dawson filler.

By Mr. McCanna: Your Honor, we have on file in this case a stipulation on the authenticity of a document which very early was submitted to me by Mr. Clement and in view of the stipulation, I wish to offer into evidence
548 this document and have it marked Plaintiff's Exhibit 58 for identification.

(Thereupon said document was marked Plaintiff's Exhibit No. 58 for identification.)

By Mr. McCanna:

Q. I will ask you if you can please identify that document.

A. The document in this binder is a photostatic copy of the contract between the Mojonnier-Dawson Company and John J. Polivka and Maurice J. Brasile, dated the 29th day of December, 1951.

Q. I call your attention to one of the preamble clauses, I believe, that refers to patent application serial number 85,278.

Will you please read that clause?

A. The clause reads:

"Whereas the seller"—

that is the Mojonnier-Dawson Company—

"has designed a filler embodying certain principles and designs developed or invented by the seller and upon or with respect to which seller is the owner of one or more patents or applications for patent as follows:
549 Application for patent serial number 85,278, filed with the United States Patent Office on April 4, 1949."

Q. Is that a patent application from which resulted reissue patent number 23,830 here in issue?

A. Yes, sir, it is.

550 Q. Now in your dealing with Mr. Brasile which resulted in this contract of December 29, 1951, was there anything said to him about this patent application of yours?

A. There was discussion and many, if not all of the meetings prior to the signing of this contract, were about the fact that I had in the office an application for patent on this filler.

When this clause of the contract was drawn up, a blank space was left for the insertion of the application number.

I was quizzed at great length as to whether I actually had a patent application in the office and finally I gave

them the patent application serial number 85,278 covering the application, which resulted in pateat reissue 23,830 and that number was inserted in the contract where it is shown.

Q. I call your attention to paragraph 2 of that contract starting: "A working model."

Will you please read that sentence?

A. (Reading.)

"A working model made by the filler in accordance with said specifications has been examined and approved
551 by the purchasers as to design and function."

Q. What do you know about this working model?

A. The working model referred to in that sentence of paragraph 2 is the first Model CP Mojonnier-Dawson Electromatic filler which was constructed. It was built for the Willow Farms Dairy at LaGrange, Illinois, and sold to them prior to the signing of this contract.

By Mr. McCanna: Will you please mark this Plaintiff's Exhibit No. 59 for identification?

(Thereupon said document was marked Plaintiff's Exhibit No. 59 for identification.)

By Mr. McCanna:

Q. I hand you a circular which I have had marked Plaintiff's Exhibit 59 for identification and ask what you know about the filler shown in that.

A. The photograph—in fact, the four photographs reproduced in this circular, were taken at the plant of the Willow Farms Dairy at 47th and Plainfield Roads, LaGrange, Illinois, and are photographs of the Model CP Mojonnier-Dawson filler which is referred to there in the second sentence of paragraph 2 of the contract that I have just read.

552 The man shown in the photograph is Jack Polivka, Jr., the son of John W. Polivka, who signed this contract. I guess it is "John A. Polivka"—John Polivka, in any case.

Q. I find on this circular on the reverse side, the language:

"Now the small dairy can use Pure Pak paper cartons."

Will you please read into the record that paragraph?

A. (Reading.)

"Now the small dairy can use Pure Pak paper cartons. The preformed carton filler makes it possible for the smaller dairyman to fill his products in Pure Pak paper cartons

rapidly enough for his needs and with an investment that he can afford."

Q. And there is another paragraph about "Proven filling principle." Will you please read that?

A. The paragraph is entitled:

"Proven Filling Principle."

It reads:

"The filling principle is the well known 'Electro-
553 matic' principle in wide use in the filling of other types of milk cartons, in the filling of pressurized whipping cream and in the filling of aerosol bombs. The volume of product filled is adjustable by merely turning a dial. There are no gaskets or rubber parts. A high degree of accuracy is obtained."

Q. And the next paragraph?

A. The next paragraph is entitled:

"Utmost Simplicity."

It reads as follows:

"There are very few moving parts on the filler. The entire filling mechanism can be dissassembled for cleaning in a few minutes' time."

554 By the Court: Why do we have to do this?

By Mr. McCanna: Well, your Honor, I would like to have in the record these statements that are extolling the benefits and merits of this filler which is the invention that we have here initially and these are statements by this defendant. I think it is—

By the Court: Is the paper in evidence?

By Mr. McCanna: All right. We will proceed then.

By Mr. McCanna:

Q. Mr. Mojonnier—

By the Court: Have you offered it?

By Mr. McCanna: I have offered it.

By the Court: Has it been received?

By Mr. McCanna: I will offer it now in evidence as Plaintiff's Exhibit 59.

By the Court: You have it marked Exhibit 59.

Any objection?

By Mr. Clement: We object as to the relevancy. We don't quite understand it.

By Mr. McCanna: Well, it is simply relevant when
555 the defendant, as exclusive agent for the plaintiff, puts out a circular extolling all or most of the benefits of this invention. I think that is relevant.

By the Court: Well, I don't know. It might be relevant to something.

By Mr. Clement: I don't think it was put out by the defendant. It says "Preformed Carton Corporation."

By Mr. McCanna: Well, we will connect the Preformed Carton Corporation with Mr. Brasile. That is one of the confusing things in this case.

Apparently, all these different names and all these acts we are dealing with are by the same party, coming from the same source, and I certainly think that is relevant and material. We will connect up the Preformed Carton Corporation.

By the Court: Well, I don't know.

By Mr. McCanna: (Continuing.) With these other 556 companies.

By the Court: I don't know whether it is material or not, but it may be received.

(Said document, so offered and received in evidence, was marked PLAINTIFF'S EXHIBIT No. 59.)

By Mr. McCanna:

Q. Now, Mr. Mojonnier, is there any filling machine of the Mojonnier-Dawson manufacture here in this court room that is similar to this filler shown on this circular of Preformed Carton Corporation?

A. Yes, there is. The Model CP Mojonnier-Dawson filler, Plaintiff's Exhibit No.—

Q. 39?

A. —39 is very similar. In fact, it is almost identical to the filler shown in the photograph on this circular, except that the Model CP in the court room has a hydraulically operated stapling unit, whereas the filler in the photograph had a hand operated stapling unit.

557 By Mr. McCanna: Your Honor, there is also stipulated in this case, the authenticity of a document which is an agreement dated September 29, 1952 between Preformed Carton Corporation and U. S. Filler Equipment, Inc., an Illinois corporation. The latter is a party to this case and I will offer this in evidence as Plaintiff's Exhibit 60.

(Thereupon said document was marked Plaintiff's Exhibit No. 60 for identification.)

By the Court: Is there any objection?

By Mr. Clement: There is no objection, your Honor.

By the Court: It may be received.

(Said document, so offered and received in evidence, was marked PLAINTIFF'S EXHIBIT NO. 60.)

By Mr. McCanna: Would your Honor care to see this?

By the Court: What is the connection, can you tell me? Can you tell me in a word what the connection there is?

By Mr. McCanna: It is an agreement under which
558 Preformed Carton Corporation was the exclusive agent, coming from Mr. Brasile and Polivka in agreement, and apparently they took it upon themselves to enter into an agreement transferring this exclusive agency, or the exclusive distributorship, or giving that distributorship right to a new corporation which is one of the defendants in this case and that is where the name U. S. Filler Corporation, one of the defendants here, enters into the picture.

I might explain to your Honor there is another connection in this December 29, 1951 contract. There was provision whereby Mr. Brasile and Mr. Polivka might form a corporation to operate under this first contract and they were to call that Preformed Carton Corporation and that is one of the acts of Preformed Carton Corporation, in sort of delegating the exclusive distributing rights to another new corporation.

I might also call attention to the fact that Mr. Brasile is signatory for both of those companies on that agree-
559 ment that you have, Plaintiff's Exhibit 60.

By the Court: Go ahead.

By Mr. McCanna:

Q. Now Mr. Mojonnier, was the Mojonnier-Dawson Company a party to this contract, Plaintiff's Exhibit 60?

A. No, sir. On the contrary, information as to the relationship between the Preformed Carton Company and the U. S. Filler Equipment Company was withheld from us, even in spite of our earnest efforts to obtain it.

The first we saw this contract was when it turned up on discovery procedures in this case.

560 Q. Following the making of the contract of December 29, 1951, what happened between you and Mr. Brasile as to carrying out its performance? Briefly, give us the details, generally.

A. I took—

By the Court: Where is the copy? Is that in evidence?

By Mr. McCanna: It is in evidence.

By the Witness:

A. I took Mr. Brasile completely into my confidence.

By the Court: Proceed. Proceed.

By Mr. McCanna:

Q. Go ahead.

By the Court: I can do two things at one time—I think I can.

By the Witness: Thank you.

By the Witness:

A. I took Mr. Brasile completely into my confidence, considering him in the same relationship to me and to the Mojonnier-Dawson Company that would have existed between a trusted employee in our engineering or shop—in the engineering or shop end of our business.

561 I explained to him many things about the Mojonnier-Dawson Electromatic filler and proceeded to teach him and to teach his representatives, such as his salesmen and his service men, how to handle these Mojonnier-Dawson machines, particularly from a sales and service standpoint.

We constructed and manufactured and sold to Preformed Carton Corporation a substantial number of Model CP fillers during the period beginning December 29, 1951 and ending on or about July 13, 1955.

562 By Mr. McCanna:

Q. And during that period, did you have any dealings with any other individuals connected with Preformed Carton or Mr. Brasile in carrying on the business under this contract?

A. Yes, I did.

Q. Who were they principally?

A. Oh, principally, Mr. Jack Polivka, Sr., Mr. Eugene Blum, and salesmen and servicemen of the various companies that Mr. Brasile formed, such as Mr. Moravec, Mr. Willette, Mr. Patton, and a few others.

Q. During the early period of this business, where was Preformed Carton located? Where was their office and place of business?

A. The Preformed Carton Corporation set up an office in the front room of Mr. Polivka's dairy at LaGrange, Illinois, on 47th and Plainfield Roads. He calls it the Willow Farms Dairy.

Q. Do you recall how long they operated there?

A. Yes, they operated there during the year 1952 until directly after the dairy show, which was the latter part of September, 1952.

563 Q. And they moved then to where?

A. Well, Brasile came into our office one day and told us he had formed a new corporation that he was going to call U. S. Filler Equipment, Inc.

We got a lot of double talk as to what the corporation was all about—

By Mr. Voland: I object to this, your Honor, and move it be stricken.

By the Court: Sustained.

By the Witness: I am sorry.

By the Court: Strike it out. "I said," "he said," use that form.

By the Witness: Thank you.

By the Witness:

A. I asked him the reason that he had formed this new corporation, and while I don't remember his reply exactly, it was indefinite.

At that time we were given to understand that the office was being moved to Woodstock, Illinois, to small—

By the Court: You didn't take seriously what I said to you. "He said," "I said," "we said"—use that formula.

By the Witness:

A. He told me he was moving his office to Wood-
564 stock, Illinois.

By Mr. McCanna:

Q. Do you know whether he did move there?

A. Yes, he did.

Q. Do you know whether the business under this contract of December 29, 1951 was carried on by Mr. Brasile at that location at Woodstock?

A. Yes, I would say it was.

Q. Now while this business was being carried on under this contract with your company, were there any other officers you did business with from the Preformed or his new corporation, U. S. Filler?

A. The officers and personnel of the U. S. Filler Equipment, Inc. were the same except for Polivka as the officers and personnel of Preformed Carton Corporation.

The one exception that there may have been to that was Mr. Blum. I never knew exactly the position that Mr. Blum had in the Preformed Carton Corporation.

Q. After Mr. Brasile moved this business to Woodstock, do you know or did you have any contact with Mr. Polivka in carrying on the business?

565 A. Immediately after Mr. Brasile informed us that he had formed the U. S. Filler Equipment, Inc., I had a long talk with Mr. Polivka, and Mr. Polivka told me to continue—

By Mr. Voland: If the Court please, I would like to note an objection to any conversation out of the hearing of these parties defendants.

By the Court: Sustained.

By Mr. McCanna:

Q. Now you are referring to a conversation you had with Mr. Polivka?

A. Yes.

Q. Will you please state where that was?

A. It took place at the previous office of the Preformed Carton Corporation at 47th and Plainfield Road.

Q. And when was that?

A. That was in the early part of October, 1952.

Q. Who was present?

A. Mr. Polivka and I.

Q. And what was said?

By Mr. Voland: I object, if the Court please, on the same ground.

566 By the Court: Sustained.

By Mr. McCanna: I would like to ask the witness what was said between these—

By the Court: You have had your wish. Objection has been made and I sustained the objection. You did ask him. The objection is that the conversation is out of the presence of the party defendants.

By Mr. McCanna: All right, we will proceed. We will be calling, I believe, Mr. Polivka as a witness in this case, your Honor.

By Mr. McCanna:

Q. Now in the course of this business that you had under the contract of December 29, 1951, were there any other parties, any other defendants in this case that entered into this?

May I ask a preliminary question to that.

Do you know Albert A. Lewis? Are you acquainted with him?

A. Yes, I do.

Q. Did he enter into this business in any way?

567 By Mr. Kipnis: I object, if the Court please, as calling for a conclusion of the witness.

By the Court: Yes. Objection sustained.

By Mr. McCanna:

Q. Did you have any contacts—well, let me go back to this. What was your first contact with Albert A. Lewis?

A. What date?

Q. Yes.

A. On June 24, 1953.

Q. Will you state where that took place?

A. He was introduced to me by telephone by Mr. Brasile, and I met him for dinner and a meeting in Mojonnier-Dawson offices on the evening of that day.

Q. Who was present?

A. Mr. Lewis and Mrs. Lewis, a Mr. Swanson from our office, Mrs. Mojonnier, a Mrs. Lindeen, and myself.

Q. Now will you state what conversation there was, if you recall, between Mr. Lewis and yourself at that time?

A. Mr. Lewis told me that he was considering putting some money into some of the corporations which Mr. Brasile had formed, and the purpose of his visit was

568 to persuade me to defer payment on some of the bills which Mr. Brasile's Preformed Carton Corporation—

By Mr. Kipnis: I object to the witness' conclusion as to the purpose of the visit. He was asked to relate a conversation. I think he should stick to that.

By the Court: If you would remember that formula, then you wouldn't have objections like this.

By the Witness: Mr. Lewis asked me if I would defer the payment of certain bills which Mr. Brasile's Preformed Carton Corporation owed the Mojonnier-Dawson Company.

By Mr. McCanna:

Q. Did you have any reply to that?

A. I prepared a proposed arrangement whereby deferment of payment could be made provided certain conditions were met. Mr. Lewis took that agreement with him and told me that he would see if he could get it signed and

get the conditions met when he met with Mr. Brasile in Woodstock the next day or two—the next day, I believe.

Q. And what was the outcome of that or what happened after that?

569 A. The conditions were never met and the offer was withdrawn.

Q. That you say was June 23rd, about?

A. June 24, 1953.

Q. What happened following that so far as your company was concerned in operating under this contract?

A. We shortly after that terminated the contract.

Q. In what manner did you do that?

A. We gave notice that unless the outstanding indebtedness were brought up to date within a certain number of days, we would terminate the contract, and when that was not done we terminated the contract for nonpayment and for other reasons, one of the other reasons being that we had found out—

By Mr. Voland: I object. No question pending as to the reason for termination of the contract.

By the Court: What was that?

By Mr. Voland: There is no question pending as to reasons the witness had for terminating the contract. He was asked to tell what happened.

By The Court: Reasons wouldn't be admissible 570 unless they were stated by some person in some conversation which would be admissible or some paper writing which would be admissible.

By Mr. McCanna: I was just about to ask the witness whether there was any writing on that termination.

By Mr. Kipnis: May it please the Court, I don't quite see the relevancy of all this examination. This is the subject of the state court action, and we are contending breach of contract over there, and they are contending there was not a breach of contract.

Now we are getting in here and trying the same thing that your Honor said should be postponed until we get through with Count 1. It seems to me we would save a lot of time if we get down to the question of who were the infringers.

If he wants to prove that some of these defendants made and sold this machine, I think he ought to get into that. But we are getting way far afield, two or three years away from the alleged infringement.

571 The patent didn't issue until February 2, 1954, and now we are talking about events that took place in 1953. I don't see any relevancy at all.

572 By Mr. McCanna: That is only a few months. But, your Honor, I have no intention of going into this contract matter. I fully realize that is in issue in the Superior Court. I merely wanted to show when the relations under the contract ceased, and that they did cease by giving them a written notice.

I have no intention of going into the reasons, and I fully realize that the causes of that termination are a controversial matter. But so far as we are concerned here, it is a matter of interest and the fact is material that their relations terminated at a certain time and that certain things happened between these parties before that time and certain things happened after that time.

That is what I whish to get into. I will be glad to ask the witness whether there was a writing given and the date of it, and we will rest on that.

By the Court: Was there a writing?

573 By Mr. McCanna: Yes, there was a letter given, your Honor.

By the Court: Well, that is what ought to be produced, if it is material at all.

By Mr. Kipnis: If your Honor please, there is no claim of license.

By the Court: I have to see. I don't know what we are talking about.

By Mr. McCanna:

Q. Was there a writing given, Mr. Mojonnier, in this termination of the contract which we have been discussing here?

A. Yes, there was.

Q. Do you have that writing?

A. I believe so.

Q. I hand you a paper and ask you if you can identify that?

A. Yes, I can. This is a carbon copy of the writing by which the contract was terminated.

By Mr. McCanna: Will the Reporter please mark this as Plaintiff's Exhibit 61 for identification?

(Thereupon said document was marked Plaintiff's Exhibit No. 61 for identificaton.)

574 By Mr. McCanna: Would you care to see this, your Honor?

By the Court: Are you offering it?

By Mr. McCanna. I will offer it in evidence.

By the Court: Any objection to it?

By Mr. Voland: May I see it, please?

By Mr. McCanna: Yes.

(Handing document to counsel.)

By the Court: Any objection to it?

By Mr. Voland: No objection.

By the Court: It may be received.

(Said document, so offered and received in evidence, was marked PLAINTIFF'S EXHIBIT NO. 61.)

By the Court: What is it? What does it say?

By Mr. McCanna: May I read it?

By the Court: Tell me what is in it.

By Mr. McCanna: It is a notice from Mojonnier Dawson Company to Preformed Carton Corporation, with copies to U. S. Filler Equipment, Inc. and U. S. Carton Forming, saying that they are terminating this agree-

575 ment for some causes, and inasmuch as—

The Court: Terminating which agreement, this one of December?

By Mr. McCanna: December 29, 1951.

By the Court: Then we are back just where we started, are we?

By Mr. McCanna: Yes, the second contract—

By the Court: Why did we start?

By Mr. McCanna: The second contract this Mojonnier-Dawson Company is not a party to so this was the written notice of termination.

By the Court: All right.

By Mr. McCanna: Of the December 29, 1951 contract.

By the Court: All right.

By Mr. McCanna:

Q. Now, Mr. Mojonnier, during the period that you were operating under this contract, that is the period from December 29, 1951 to this July date in 1953, did you make any disclosures to Mr. Brasile with reference to the manufacture of your filler machine which you would regard as confidential disclosures?

576 By Mr. Voland: If the Court please, this is the subject-matter of Count 3. I thought we were operating under an order which your Honor entered that Counts 1

and 3 would be tried separately and in that sequence. That is the way in which we have prepared the case.

By the Court: I would like to do it that way if we can do it.

By Mr. McCanna: There wasn't any order that I know of, your Honor, was there?

By Mr. Voland: Oh, indeed there was. There was indeed.

By Mr. McCanna: Our point on this matter, your Honor, is this: We have pleaded this in the complaint. The complaint was the subject of a motion for dismissal on the ground—

By the Court: Oh, I remember very well indeed.

By Mr. Kipnis: Here is the notice from the Clerk, dated March 29, 1955:

"You are hereby notified that Judge Barnes 577 entered the following order on March 25, 1955.

"Enter order on motion by Brasile group defendants directing that issues relating to Counts 1 and 3 be heard separately and in that sequence."

By Mr. McCanna: Your Honor, are we going to have two lawsuits here on this? How would we—

By the Court: Well, the order was made back there. I remember the discussion about it.

578 By Mr. McCanna: If that was made, I think it was made when I was away down at this air plane crash.

By Mr. Voland: On the contrary, you were present.

By the Court: I think you were present at the time anything was done.

By Mr. McCanna: Well, I have a pleading for the plaintiff in this case alleging these matters of wrongful appropriation of the invention and connecting up all of these defendants. Now I am before this Court with that pleading, and I believe—

By the Court: But you are confronted with that order which was made back there. Maybe it was an improvident order, but it was made. The parties have relied upon it. I don't remember any protest at the time.

By Mr. McCanna: Then are we to proceed, if I understand this correctly, are we to proceed in two separate, entirely separate courses here?

By the Court: What else do you have on your Count 1?

579 By Mr. McCanna: You mean matters that I would like to show?

By the Court: On Count 1, yes.

By Mr. McCanna: I would like to show, well, on Count 1 I have all the defendants in this case. I want to connect them up to show the things, the acts that the defendants did. We have named seven corporations and we have named Mr. Brasile and Mr. Lewis as the principals of those corporations.

Now I would like to show what these corporations did in taking this invention—

By the Court: By way of infringement?

By Mr. McCanna: How they acquired this machine. It didn't drop out from the heavens into their laps. It came through steps, and these steps were these corporations, from time to time, and I expect to establish that by calling the defendants as witnesses.

By the Court: Well, I don't know—

By Mr. McCanna: I propose to call Mr. Brasile and—

By the Court: I suppose I had better let you go along and let you try your case the way you want to. It
580 will probably save time.

By Mr. McCanna: I think it will become very confusing.

By the Court: Of course, I did make that order way back there. You might have been thinking about it.

By Mr. Voland: We have relied upon that order in the preparation, if the Court please.

By the Court: What difference does it make to you?

By Mr. Voland: It makes some difference as to the division of responsibility and work between Mr. Clement and myself, the availability of our witnesses, and so forth.

By the Court: Well, we will all be here a long time.

By Mr. McCanna: Your Honor, look at the array of lawyers that I have been contending with for a year here. I would certainly be very happy to proceed and streamline this case just as much as possible.

I said in my opening statement that I would stay as closely to the documented evidence—I maybe should
581 have gone into all sorts of discovery, the production of books and records. I deferred doing that. I haven't done it. I have taken steps that would simplify this.

When the opposing side have asked us for papers, we have produced everything for them imaginable. Right this minute, this morning, they are examining papers. It is

going on right now, papers that Mr. Mojonnier and Mrs. Mojonnier had to sit up until midnight several nights this week to dig out of their files. The defendants here have asked for that for this trial in anticipation of cross examining Mr. Mojonnier.

Does that mean that this is a separate case or should be in a separate proceeding? We would have to go on and establish prima facie in both of these parts of the complaint, and then how are we going to go back and forth, from rebuttal to prima facie again?

It seems to me that the thing will follow a very natural course. Your Honor asked me that question early in the case, did we have a plan for the case? We have a plan
582 for the case, and I think it is a very simple and logical one.

We prepared on the patent validity and its infringement, and we have presented that through Mr. Fishleigh. We are now at the stage where I would like to show very briefly the commercial success of this invention.

I will say that we will immediately proceed with the defendants here to examine them and show all these corporations, their connection with this, the various acts, and I think it will be very illuminating, your Honor, when you see that evidence.

I think it is very material to this case and it is material to the participation of all of these companies in the appropriation, the wrongful appropriation of this invention which culminated exactly in this machine, our Exhibit 40, I believe it is here. That certainly is relevant and material to this entire case.

I don't know how I would divide it up any other
583 way and do it reasonably. If your Honor has a suggestion, I will be glad to follow it. But I can briefly, without entering into this contract matter at all, which I had no intention—

By the Court: I did make a suggestion back there when I made that order.

584 By Mr. Voland: Perhaps the Court remembers that at that time I made the rather rash statement that if your Honor read Count 3, perhaps you would not be able to understand it any better than I did, and your Honor wondered if that was a deficiency in the pleading or yourself, and then read it, and after some colloquy the order to which we have just referred was entered.

I stated to the Court then, and I state now, that I still

don't know what Count 3 is. It is just what counsel calls it, a ball of wax, whatever that means. If we are going to try that count along with this clear cut Count 1—

By the Court: They don't have balls of wax in patent cases.

By Mr. Voland: If we are going to try that along with this clear cut patent infringement count, your Honor, we are going to be here three months. There will be no limit to this. Counsel has done it in a very disarming way
585 solely for the purpose of going into a lot of immaterial things.

By the Court: Well, it wouldn't make any difference except it takes time.

By Mr. Voland: It is extremely expensive.

By the Court: I don't see any other way to get through with this lawsuit.

By Mr. Voland: I can see one way. I would like to suggest that we proceed from this point and establish the identity of these infringers, if there are any infringers.

By the Court: I would think that would be a logical way, but after all, a man starts a lawsuit and if you interfere with the trial of his lawsuit, you know, everybody that does it is at a disadvantage.

By Mr. Voland: We are not interfering. We are only asking him to follow the order of the Court.

By the Court: Mr. McCanna has something in his mind and he wants to set it out here. I think the easy way to get through with the lawsuit is to let him do it.

586 By Mr. McCanna: Your Honor please, may I say this: Plaintiff has taken the depositions of these three men. We know pretty well what the facts are.

By the Court: I am inclined to agree with you, if you will just get along, just as fast as you can.

By Mr. McCanna: I will be very happy to do that, just as I said—

By the Court: Don't ask for reasons and don't ask for this and that, just what was said and done. Then you will be getting along and getting competent, relevant and material evidence.

Get along now just as fast as you can, will you, please? Any way at all, but get along.

By Mr. McCanna: There is this one—

By the Court: No. No, get along.

By Mr. McCanna: All right, your Honor.

The Court: Just as fast as you can.

By Mr. McCanna:

Q. I believe I asked a question, Mr. Mojonnier, as to what disclosures you made, if any.

587 By the Court: When did you have a conversation with so-and-so, and who was there, and what was said and done. You might just as well stay within the rules of evidence. They are pretty good rules.

By Mr. McCanna:

Q. Mr. Mojonnier, did you have any conversation with Mr. Brasile concerning the manufacture of your filler machine while you were under contract, this contract with him, and if so, will you please state when you had any such conversation and who was present and where it was and what was said?

A. It is a long time ago, but I can recall distinctly a conversation in the offices of the Preformed Carton Corporation at 47th and Plainfield Road in LaGrange, at which Mr. Polivka, Mr. Brasile, Mr. Blum and myself were present.

That conversation took place in the early part of January, 1952.

I can recall another one in the latter part of January—

By the Court: Now, there is one. Tell us what was said.

588 By the Witness:

A. At that conversation I was asked to describe the operation of the timer of this machine. I told Mr. Brasile—

By Mr. McCanna:

Q. Who asked that?

A. Mr. Brasile. Mr. Brasile asked me how it worked, what its principle was.

Without taking the time of the Court to go into all the details, I told him a great deal of what I knew about the principles and construction and operation of that timer.

By Mr. Voland: I move that be stricken as the witness's conclusion.

By the Court: Strike that out.

By Mr. McCanna:

Q. If you can recall, Mr. Mojonnier, what was said? I believe that is what the Court, what we have in mind.

A. He asked me what the principle of the timer was.

I told him that its basic principle was the use of a capacitant circuit consisting of a condensor and a set of resistors and a potentiometer, which was charged during the off cycle of the time and which was discharged during the on cycle.

589 By Mr. Kipnis: If your Honor please, I don't like to interrupt the witness, but I thought he was going to testify about trade secrets. He is just telling us what is on the market.

By Mr. McCanna: We haven't said anything about trade secrets.

By Mr. Kipnis: I thought it was limited to that.

By Mr. McCanna: This is the term that Mr. Kipnis or someone else has been throwing around and kicking around here, and the plaintiff at no time has alleged trade secrets. It has alleged that it possessed a great amount—

By the Court: Overruled. Go ahead.

Now, really, I don't see what difference that conversation would make, but go ahead. Let's get through with it.

By the Witness:

A. (Continuing.) I also described to Mr. Brasile in response to his question the operation of the relays in this timer circuit and told him—

By the Court: Aren't those timers matters that you can buy anywhere? Aren't they?

By the Witness: No, they are not.

590 By the Court: I am asking your counsel. Aren't they?

By Mr. McCanna: Well, not for use in the milk filling machine.

By the Court: In a milk filling—I suppose beer filling or whiskey filling, that would be different, would it?

By Mr. McCanna: The know-how, your Honor, of how to do these things, we say was something peculiar in the possession of Mr. Mojonnier, and we have filed in response to an interrogatory—

By the Court: All right. Now, go ahead. If you think it is material, why, for goodness' sake, go ahead.

By Mr. McCanna:

Q. Would you go on with what was said there?

A. He asked me if I had ever made any experiments with these timers and asked why I didn't now use a Photoswitch timer.

I told him that I had experimented with Photoswitch timers and used a great many of them in our early days; that I had spent over a year experimenting with the
591 Bridgeport Brass, General Electric, and Photoswitch, and out of those I had developed a new circuit for these timers involving two relays so that the errors in the timer due to voltage variation could be greatly reduced.

I think that is sufficient on the timer.

Q. Did you have any other meetings with Mr. Brasile or any other meeting during the term of this contract in which the manufacture of the filler was discussed, and if so, please state what was said between the parties.

A. I distinctly recall a meeting at the Willow Farms Dairy's office of the Preformed Carton Corporation in the latter part of January, 1952, to which meeting I invited Mr. Harold Wainess, who was at that time the U. S. Public Health Service representative in the central area.

At that meeting Mr. Brasile asked me why I constructed the nozzle on the filler the way that I did. I told him how we made the nozzle and why we made it that way, showed him how we obtained—

By Mr. Voland: Is that what you told him, Mr. Mojonnier? I would like to have the conversation repeated. I object to the conclusions.

By the Court: Sustained.

592 By Mr. McCanna:

Q. Please try to confine your statements to what was said as closely as you recall.

A. I find it very difficult. You see, I know what I told him, but just exactly what was said is extremely difficult to recall at this late date.

I know that I told him—

Q. Do you recall the wording as you would have spoken to him? Do you recall in that manner?

A. I said, "Maurie, we make the nozzle with the $\frac{7}{8}$ inch opening in it because we have found by long experimenting that this gives the most rapid possible flow without causing too much foam.

"We also put a deflector on the side of the nozzle to flow the stream down the side of the carton because we find that this—"

By the Court: This patent says "any commercially available interval timer 66" may be used.

By Mr. McCanna: Yes, that is correct.

By the Court: Go ahead.

By Mr. McCanna: But in the actual—well, that is correct.

By Mr. McCanna:

Q. Will you proceed, please?

593 By the Witness: What were my last words, please?

(Whereupon the record was read as above recorded.)

By the Witness:

A. (Continuing): "Because we find that this reduces the amount of foam and enables us to fill faster."

I also asked Mr. Wainess at that conference if he felt that this entire program based on forming cartons in dairies and filling them on our filler was sound.

He told me he felt that it was perfectly sound as far as the filler went, but that he had some distinct reservations as to the forming of cartons in dairies. He promised that he would study that matter.

He also examined the filler with me and with Mr. Brasile at that time, and he gave me tentative approval of the construction of the filler.

594 Q. Do you recall any further meetings you had with Mr. Brasile at which you and he discussed the manufacture of your Electromatic filler under this contract?

A. I recall a meeting which, I believe was in March of 1952.

Q. Where was that and who was present?

A. At our plant, at the Mojonnier-Dawson Company, at which there were present Mr. Brasile and myself and some of our shop personnel for short times.

During the meeting, which I distinctly remember, Mr. Brasile was there quite a few hours in our plant. He asked me how we made the tank on the filler. I told him that we rolled up a cylinder of stainless steel, longitudinally, welded the cylinder and polished it.

I told him we made the bottom from the spin, that we welded a nipple to the bottom and that we polished the inside of the bottom preparatory to final assembly.

I told him that we then welded the sidewall to the bottom and by using this procedure, we were able to get a good polish on the bottom, which could not be obtained if we did our assembly all first and our polishing

595 all last.

He then asked me how we made the cover. I told

him that we made it out of machine parts which we assembled with sheet metal spinnings on a jig. I showed him the jig. I remember that he asked me why the part of the jig which held one of those machine parts was tipped at an angle. I told him this was done to compensate for warpage in welding.

I told him that an angle of five degrees was about right in that particular jig and that certain experimentation was necessary on each one.

We also discussed, at that meeting, the construction of the float. He asked me what we used for our float. I told him that we used two spinnings, that we had them helical arc welded circumferentially, that we fastened a stirrup to them by silver soldering.

I told him that a spherical float gave a more nearly accurate control of level than did a flat float.

He asked me why and I told him I had experimented with various types and found the spherical was the
596 best. I told him it was best to design the float so it would float nearest to its equator, that this gave the most sensitive action.

At that time, I was in the middle of the change in this coil case, taking the coil out of an integral assembly with the cover and putting it into a separate assembly. I told him, in response to his question, that we used a 14 watt coil which we bought at that time from the General Controls Company.

I told him we bought it from General Controls Company. I told him that there were also other types of solenoids available and pointed out that the Allen Bradley Company and many other people made a business of selling these solenoids.

I showed him the magnetic parts that we used in this coil case and told him they were necessary to the operation of the machine.

I also told him other things which I don't thoroughly remember at this time.

597 Q. Can you recall any other meetings between you and Mr. Brasile at which the manufacture of the Electromatic filler under this contract was discussed between you?

A. Mr. Brasile—

Q. If you do, will you please state what was said?

A. Yes. The next meeting, I recall, was in October, 1952. Mr. Brasile had been in the hospital.

Q. Where was this?

A. This meeting was at the Mojonnier-Dawson Company office.

Q. And who was present at that?

A. Mr. Brasile and I.

Q. And what was said between you that you recall?

A. At this meeting, Mr. Brasile asked if I would explain to him the construction and operation and design of the hydraulic equipment which I had developed shortly before that for the stapling unit of the filler.

I told Mr. Brasile I would be glad to. I showed him how the foot pump was put together. I showed him how the cylinders were made. I showed him how we sealed the hydraulic pressure with the O ring. I showed him how the V block was made. I showed him how we designed
598 the foot pump so that a satisfactory but not an excessive pressure could be obtained.

Q. Now do you recall any further meeting between the two of you, Mr. Brasile and yourself, during the period of this contract at which you discussed the manufacture of the Electromatic filler?

A. I believe there were other meetings, but I can't recall them distinctly at this time.

Q. Following the termination date, that July, 1953, date, did the Mojonnier Company carry on the manufacture of this Electromatic filler?

A. Following the July, 1953 date?

Q. Yes.

A. We did continue to carry on the manufacture.

Q. Will you state generally the progress of your manufacture and sale of this filler following that date?

A. Did I understand you to mean the CP filler?

Q. Well, whatever the continuity was, following that, generally.

A. We had, of course, been continuing, during the life of this contract, to sell Mojonnier-Dawson Electromatic fillers for other products and for other paper cartons such as the American Can carton and the aerosol bombs.
599 When this contract was terminated, the situation was horrible. The trade was demoralized. The jobbers did not know which way to turn.

We did the best that we could to recoup a very bad loss and gradually set up arrangements with jobbers and direct, to sell the model CP Mojonnier filler.

We also brought into production other automatic models

which I had had in experimental form during the life of the contract, but which I was unable to interest Mr. Brasile in accepting.

We perfected those, put them on the market, and we sell numerous models of Mojonnier-Dawson Electromatic fillers for Pure Pak paper cartons today.

Q. I hand you a circular and ask whether this illustrates the Electromatic fillers you are now telling about?

A. This is the circular which was published late in 1953 and illustrates the various models which we sold at that time. There are additional models today.

600 By Mr. McCanna: Will the Reporter please mark this circular Plaintiff's Exhibit 62 for identification?

(Thereupon said circular was marked Plaintiff's Exhibit No. 62 for identification.)

By Mr McCanna: I offer the circular in evidence.

By the Court: Any objection?

By Mr. Clement: No objection, your Honor.

By the Court: It may be received.

(Said document, so offered and received in evidence, was marked PLAINTIFF'S EXHIBIT NO. 62.)

By Mr. McCanna Would you care to see it, your Honor?

By the Court: You may hand it to the Clerk.

By Mr. McCanna:

Q. Here is another circular. Will you identify that, please?

A. This is a very recent circular of a model called Model E for filling Seal King paper cartons. It is 601 of our manufacture.

By Mr. McCanna: Will the Reporter please mark that Plaintiff's Exhibit 63 for identification?

(Thereupon said circular was marked Plaintiff's Exhibit No. 63 for identification.)

By Mr. Voland: I would like to have counsel explain the materiality of this document. It has apparently just been published.

By Mr. McCanna: I am showing the extent of the growth of this plaintiff and its commercial success in connection with marketing, exploiting this invention and I have just a few exhibits to introduce and I am going to conclude with this witness.

By the Court: Let me see it.

By Mr. McCanna: And then I am going to conclude with this witness.

By Mr. Voland: What is the date of the publication, Mr. Mojonnier?

By Mr. McCanna: Will the witness please give the
602 answer to the question that was asked?

By the Witness: That was prepared recently, within the last few months. I can't give you the exact date.

By the Court: If you want to show the commercial success of it, the commercial success of the plans and the device, it is one thing, but I don't see how it helps you to show the commercial success of some other item.

By Mr. McCanna: It is the filler that is the subject of this invention and as applied to one of the series of the paper cartons which we have here. Some of these machines, the earlier machines, have been applied to various cartons and we have here discussed a series of these, including the Seal King, which was of a different type and this invention has been applied to all of those. It just happens that that is the last of the series, or brings the use up to date.

603 By the Court: Well, it may be received.

(Said document, so offered and received in evidence, was marked PLAINTIFF'S EXHIBIT NO. 63.)

By Mr. McCanna: I believe I offered that into evidence—yes.

By Mr. McCanna:

Q. Mr. Mojonnier, you have talked about the use of this invention in the aerosol industry.

Will you tell us briefly something about what you know about that?

A. I testified several days ago that we made our first sale of the Mojonnier-Dawson Electromatic filler to the aerosol industry, to the Chase Products Company of Maywood, Illinois.

This sale was followed by numerous other sales because there was a pent-up demand for such a filler in that industry and immediately the Mojonnier-Dawson filler was available, a great many machines were sold to people like the Bridgeport Brass Company, the Connecticut Chemical Research Company, the American Home Products Company, Colgate-Palmolive Company, Dow Chemical Company and many others.

604 Q. I hand you a booklet with the du Pont name on it and ask if you can identify that and tell us briefly what it is.

A. This is a booklet that was prepared by the du Pont Company in April, 1951 for use at the meeting of the Chemical Specialty Manufacturers Association in May, 1951.

It describes in great detail the various aerosol bombs that are on the market, the various valves that are for those bombs.

In the center of the booklet, it goes into great detail about the filling of these containers.

It contains a statement on page 14:

"Such equipment is presently available from Mojonnier Dawson Company, Inc., 9151 Cullerton Avenue, Franklin Park, Illinois."

There are no other sources of supply for filling equipment for this product shown in this booklet.

Q. And is your Electromatic filler used extensively in this aerosol art?

A. Our Electromatic filler is known and used throughout the entire world.

605 It has been stated to me, by du Pont, that over 90 per cent of all cold filled aerosols are filled on Mojonnier-Dawson equipment and we have equipment installed throughout the United States, throughout Europe and in Australia.

In this booklet, there is an illustration of a 90 can per minute line which has been installed for some years at the plant of John C. Stalford—

Q. On what page is that?

A. It is on page 14. There is a photograph of this filler installed at the John C. Stalford & Company plant at Baltimore, Maryland, together with a planned view of the entire filling line.

The filling line, in its entirety, in this plant, was constructed by Mojonnier-Dawson Company.

Q. I believe on the inside cover of that booklet, there are shown a lot of the so-called bombs that have been filled. Do you recognize any of those as having been filled with your Electromatic filler?

A. Yes, I do. All of the various types of bombs except the two old time high pressure bombs, war time style, that are shown on these two pages, are filled, for the most part, on Mojonnier-Dawson equipment.

Q. And is this Colgate instant barber shave bomb, Plaintiff's Exhibit 56, filled with your filler?

606 A. Yes, it is. Colgate have two 30 per minute lines including in each line a Mojonnier-Dawson Electromatic filler installed at their Jeffersonville, Indiana, plant where that product and their allied product, Palmolive shave cream, are filled.

Q. And what about this Bridgeport air refresher, Plaintiff's Exhibit 57?

A. The Bridgeport Brass Company fills that product on the Mojonnier-Dawson filler. They have a large 60 per minute Mojonnier-Dawson Electromatic filler, double line type, installed in that plant. They have had it there since 1950.

607 By Mr. McCanna: I will offer this Du Pont circular 64 in evidence.

By Mr. Voland: I object, if the Court please. We have had no opportunity to cross examine the wi'ness.

By the Court: Well, it may be received.

(Said document, so offered and received in evidence, was marked PLAINTIFF'S EXHIBIT NO. 64.)

By Mr. McCanna:

Q. Mr. Mojonnier, we have here several models of fillers of the type used in the aerosol industry and I would like to have you—

By Mr. McCanna: I would like to have them marked for identification Plaintiff's Exhibits 65 and 66.

(Thereupon said models were marked Plaintiff's Exhibits Nos. 65 and 66, respectively, for identification.)

By the Court: What are these?

By Mr. McCanna: They are models of the invention in issue here that are used in the aerosol industry.

608 We have in the court machines, Plaintiff's commercial machines that are in use in the dairy industry and we wish to show that this invention applies far beyond just the dairy industry and has gone into the aerosol industry.

I am not going to put these particular models into evidence. I would like to submit, for stipulation by counsel, that we put in photographs of these but that we, just for a few minutes, use these for illustration to the Court and have the witness tell briefly in what plants they are located and I will say at this time, that we expect to have a short, just maybe a ten minute story about this by the principal company that is using these machines.

I would like to have the witness describe them briefly as to how they have been applied in this industry and I believe that the models will be illustrative of the merits of the invention in the aerosol industry.

By the Court: Well, offer it.

609 By Mr. McCanna: The things we have been looking at.

By the Court: Well, offer it. There isn't anything to it. What do you want to do?

By Mr. McCanna:

Q. I will ask the witness to please tell us briefly about the application of your Electromatic filler to this installation, of which Model 65 is a miniature.

A. This is a one and a half inch per foot scale model, one of the types of machines which the Mojonnier-Dawson Company manufactures for the aerosol industry.

This particular machine is used exactly as shown, by the J. B. Williams & Company of Bristol, Connecticut, for filling Williams home shave.

It is also used by others with slightly different table sizes. It consists of a supply tank to which soap, which goes into the shave cream bombs, is pumped from drums.

610 It is an Electromatic filler in which the cans are filled with a—not their full content, but part of their content with soap. A crimping device which crimps the valve on the can and a device which is known in the trade as a pressure filler, is introduced at very high pressure, about 2,000 pounds per square inch and a small shot, about 18 grams of Freon is put into the can through the valve to cause the shave cream to come out as a foam.

The device shown on the end is a Freon pump for picking up the liquid Freon at a vapor pressure of about 35 pounds from the storage drums and pumping it into the cans. The air pressure is elevated for introduction into the can.

This part has nothing to do with the invention but this type of filler is substantially identical to the filler shown in the court room. Plaintiff's Exhibit No.—

Q. 37.

A. —37. In fact, except for the difference in the feed tank, the two machines—and the timer—this (indicating) uses a new type timer. Except for those two minor differences, the two machines are identical.

611 This machine is in wide use in Europe for semi automatic operations of the various aerosols.

Q. Now this second model marked Plaintiff's Exhibit 66, will you please explain briefly what that is and where it is installed, I mean the life-sized machine?

A. Well, this, your Honor, is a somewhat more complicated machine.

This again is a scale model, one and a half inches to the foot, of a model which we call in the trade, Model IM-30.

This basic type of machine is made in some eight models, this one being the smallest of the eight. Installations are all over the United States. There is one installation in Australia. There is an installation in Paris, France at the Fly-Tox Company in France. There is an installation in Australia, the Samuel Taylor Company, Ltd. There is an installation at Colgate, Dow Chemical, Bridgeport Brass, Connecticut Chemical Research, Boyle-Midway, George Barr & Company American Home Products, and many others.

In this adaptation, the Electromatic filler is a mul-
612 tiple spout filler which is listed in the patent. This particular model has two three-spout tanks. The first tank is designed for filling a concentrate and the second tank is designed for filling the Freon.

Now, this type of machine is for accomplishing what is known in the trade as cold filling.

The concentrate and the Freon are refrigerated to a point far enough below freezing so that the Freon is a liquid at atmospheric pressure. The average product, the Freon, is refrigerated to 30 below zero Fahrenheit and the concentrate to 10 below Fahrenheit. Because of the low temperature of the product, the inside tank which is identical to the tanks shown in the court room, is refrigerated with a refregiration coil, which is shown in section in this model and is insulated with cork.

The product is brought in from a pressure source of supply.

Normally, it is pumped from the Freon drums and from a vat, in the case of the concentrate, through what we call a chiller or refrigeration unit, which brings this temperature down and it is, therefore, under a rather high pressure, usually 35 to 40 pounds per square inch.

613 In each tank is a .oat. That float operates to control a microswitch which is mounted on top of the tank.

614 In response to the changes to the level of the float, the micro switch turns on and off and it, in turn, operates the solenoid valve, which admits liquid to the tank in response to the float, thus holding a constant level to the tank.

Instead of being a single spout tank as the two Mojonnier-Dawson machines you see in the court room, this has three spout tanks and this has three coil cases. The spouts are placed on the unscrambler unit and unscrambled in one line and introduced to the chain.

The chain that goes down the center of the filler, goes down intermittently, three inches at a time and stops the can below each one of the nozzles so that the can gets three shots of concentrate as it goes by and three shots of Freon.

There are, under each nozzle and in cooperation with each nozzle, micro switches which we call trip switches. They are so arranged that the can contacts them and if there is a can in position, the solenoid is connected into the circuit, particular can.

615 The timers which are mounted, one for each tank, on a separate post, often on a wall, are fired from the switch on the mechanism of the filler. As soon as the chain has pulled forward and stopped, the timer fires. Then, whichever solenoids are over cans, open for the interval of time determined by the timer, discharge a uniform volume of product into the can and close.

The cans, thus, get three shots of concentrate and three shots of Freon, whether one can goes down a line or whether a continuous row of cans go down the line. It is not shown on the line, the lock pins on the line, which propel the lines and keep them in proper rotation to the nozzle.

The crimping device is a crimping unit which crimps the valves on the cans.

The space between the second filler and the crimping unit is allowed so that girls may place the valves in the cans manually. Most of the valves have long stems and require manual placement.

In the two large lines we have at the Dow Chemical and one line we have in the Michigan Chemical Company, we vary this because we are handling methyl bromide which has to be refrigerated to ten below zero and is a very deadly poison.

616 Those machines, we enclose in hoods which hoods are exhausted to a high smokestack.

On those machines we eliminate the space and put in a mechanical device which automatically sorts the cans and puts them on the line for crimping.

Those machines fill practically all the methyl bromide that is used. Its chief use is for killing ants at the coffee plantations.

Each coffee plant requires several pressure cans of methyl bromide each year or they are going to live.

The refrigeration coils as shown here are connected to a refrigeration system which is not a part of the filler, which simply is designed to keep the tank cold, to prevent evaporation of these very cold products, or their warming up.

By Mr. McCanna: I would like to substitute for these two models, photographs of them and I would like to offer those photographs into evidence as Plaintiff's Exhibits 65 and 66.

617 (Said photographs of models, so offered and received in evidence, were marked respectively Plaintiff's Exhibits Nos. 65 and 66.)

By the Court: Any objection?

By Mr. Clement: If the models will be available for cross examination, we have no objection.

By the Court: What?

By Mr. Clement: If the models will be available for cross examination, we have no objection.

By the Court: Yes. Let them be available for cross.

By Mr. McCanna: That will be satisfactory, your Honor.

Now, I have just two questions left, I think, your Honor.

By Mr. McCanna:

Q. Have there been any publications other than those by your company, that is, the Mojonnier-Dawson Company, featuring the Electromatic filler? Do you know of any such?

618 A. Yes. There have been numerous publications.

Q. Have you compiled any of those?

A. I have compiled a few of them in a scrap book which we have here.

By Mr. McCanna: I would like to have this scrap book marked as Plaintiff's Exhibit 67 and I will submit it to counsel for inspection.

(Thereupon said document was marked Plaintiff's Exhibit No. 67 for identification.)

By Mr. Clement: Your Honor, in view of the complexity of this exhibit, I would like to reserve our objection.

By the Court: Very well.

By Mr. McCanna: And I will submit it to counsel over the weekend.

By the Court: Yes.

By Mr. McCanna: Will you please mark this for identification, Plaintiff's Exhibit 68.

(Thereupon said document was marked Plaintiff's Exhibit No. 68 for identification.)

619 By Mr. McCanna:

Q. Mr. Mojonnier, has the Mojonnier-Dawson Company use of the invention in reissue patent number 23,830 been commercially successful?

A. Yes, it has.

Q. In what industries?

A. It is widely used in the dairy industry. It is widely used in the aerosol industry and it is used in a modest way in the food industry, the chemical industry and in the filling of various individual, special requirements such as—one I can think of right now, filling oil at the Hotpoint Division of General Electric.

Q. And what has been te dollar volume of sales, approximately, from 1948 to 1954 of these Electromatic fillers in the industries you have just mentioned?

A. I am not prepared to give an exact figure on that but it would be in the neighborhood of three million dollars or better.

Q. Does that mean starting from zero in 1948?

A. You asked for the total volume?

Q. Yes.

A. Between 1948 and date—

620 Q. Yes.

A. (Continuing) —our total sales of Electromatic fillers in 1954 were close to a million dollars.

By Mr. McCanna: Your Honor, I omitted to ask the witness to identify this book.

By the Court: All right.

By Mr. McCanna: Thank you.

By Mr. McCanna:

Q. Tell, briefly, some of the installations shown therein.

A. This is a scrap book which Mrs. Mojonnier and I have compiled. It starts with an August, 1948, publica-

tion in "Packaging Parade" showing a filler sealer, captioned "New Electromatic Unit Developed by Mojonnier-Dawson Company for use with Zimpak container."

There is a clipping from the October isue, 1939, showing Mojonnier-Dawson Electromatic filler for Zimpak containers demonstrated at the Cloverdale Dairies in Atlanta.

There is a newspaper clipping from the Muscatee, Iowa dated March, 1950, showing an installation of the Mo-
621 jonnier-Dawson filler for Zimpak cartons in the Pure Milk Dairy at Muscatine.

A paper from the Pickford, Michigan Local, a clipping from the Pickford, Michigan local newspaper describing such an installation at the dairy, in March, early in 1950.

622 Q. Now, Mr. Mojonnier, I don't think it will be necessary to cover each of those. You might pick out one or two and we will—

A. Conclude?

Q. I believe that will be sufficient.

A. I will pick out the prominent onces. There is a writeup of an operation of Swift & Company at Springfield, Missouri, filling butter oil for the overseas butter distribution project, using a two spout Mojonnier-Dawson Electromatic filler.

There are several publications by the Crown Can Company. There are numerous articles from Canadian journals or Canadian installations of the Mojonnier-Dawson fillers.

There is an article in the December, 1950, Popular Science Monthly illustrating one of our fillers in the plant of the DeMart & Dougherty Chemical Research Corporation.

There are several Du Pont publications. There is a two-page writeup from a paper in Japan illustrating several models of Mojonnier-Dawson fillers.

623 There is a clipping from the Soap and Chemicals Magazine, a trade paper, describing the model IM 30 filler such as shown in this model. Those are the prominent ones.

By Mr. McCanna: I offer this scrap book into evidence as Plaintiff's Exhibit 68 and I understand that counsel for defendants are reserving objection until after they have an opportunity to look at it further.

By the Court: Very well.

By Mr. McCanna: That concludes our direct examination of this witness.

By the Court: What is that?

By Mr. McCanna: That concludes the direct examination of this witness.

By the Court: Any cross examination, gentlemen?

By Mr. Clement: Yes, your Honor.

Cross Examination by Mr. Clement.

Q. Mr. Mojonnier, in June of 1950, how many machines of the character which you have described as your filler, were in use?

624 By Mr. McCanna: I object to that question, your Honor. I don't believe it is relevant at all to this proceeding to have the plaintiff disclose the number of machines that they make. We are not under any accounting. We have come here and have told the gross volume of sales, the extent of the business in connection with the commercial success, and I wish to point out that in view of the fact that there is this contract case pending in which there are some rather acute issues and in which that same subject-matter was tried to be pried into, I believe that it is entirely irrelevant here to have this plaintiff disclose the number of the machines and what year they were in, which would be paramount to giving an accounting.

There is no reason and no cause, I believe, for the plaintiff to give an accounting.

By the Court: Well, you put into evidence the commercial success.

625 By Mr. Clement: Yes.

By Mr. McCanna: Yes.

By the Court: They have a right to cross examine him on it. I don't see how you can escape it.

By Mr. McCanna: You mean go all the way down the line?

By the Court: I don't know. I don't know. You put in evidence the commercial success. They have a right to cross examine on it. There isn't any doubt about it.

By Mr. McCanna: As to all details as to accoanting of the plaintiff's business?

By the Court: What?

By Mr. McCanna: That would be paramount to an accounting of the plaintiff's business.

By the Court: Well, it might be. You said they sold three million dollars worth of these.

By Mr. McCanna: What would that be material to? You mean—the counter-claim doesn't involve—

626 By the Court: You say you put this in to show supposed commercial success, is that why you put it in?

By Mr. McCanna: Yes.

By the Court: All right. They have a right to find out about that supposed commercial success.

By Mr. Clement: Your Honor, we have no objection to his withdrawing that evidence if he cares to.

By Mr. McCanna: Well, I would like, your Honor, to—

By the Court: Well, for the life of me, I can't see why, having started in with that subject, you shouldn't let them finish it up.

By Mr. McCanna: Well, if it applies, if the inquiry is directed, we will say—

By the Court: What?

By Mr. McCanna: If the inquiry is directed to the filling mechanisms as such, the number of installations that
627 have filling mechanisms. Now, when you start to go from that filling mechanism down into all the variations of it, all the types and models that are outside of this controversy here, and that is what I fear that these defendants are going to inquire into—

By the Court: That is just the point. The figure of three million dollars was mentioned. Well, what is going through my mind is how much of that is attributable to the patent?

628 By Mr. McCanna: As long as the questions are confined to the invention subject-matter and not other subject-matter, I believe it is entirely proper that I should not withdraw the showing that we have made.

By Mr. Clement:

Q. Mr. Mojonnier, I will ask again, how many mechanisms incorporating the invention were in use in June of 1950?

A. Mr. Clement, beginning in the early part of 1950, we began keeping track of serial numbers of our machines. Without a detailed audit of our books, I can't answer that question exactly. I can tell you that we have made an estimate that the number of Electromatic filling units in use at the end of 1950 was 324.

Q. How many were in use at the end of 1949?

A. I don't have that figure broken down that way.

Q. Do you have an estimate?

A. No, I would hesitate to guess.

Q. Was it less than 100?
A. At the end of 1949?
Q. That is correct.
A. This is a complete guess, but I would say it 629 might have been 150 at that time.
Q. How many of those units in 1949 that were in use in 1949 were in use to fill American Can paper cartons?
A. There were no fillers used in 1949 to fill American Can paper cartons.
Q. How many of those in 1950 were used in that fashion?
A. Something in the neighborhood of 24 or 25.
Q. How many fillers of this character were in use at the end of 1951?
A. Well, the sales in 1951 were 77 fillers for all purposes.
Q. That is, there were 77 sold during the year of 1951?
A. That is right.
Q. How many of those were sold for the purpose of filling paper milk cartons?
A. In the estimate I have here, all of them would have been. That was the year of the Korean war when cans were unobtainable for aerosol.
Q. How many employees did your company have in December of 1951, Mr. Mojonnier?
630 A. I don't think I know without checking my records.
Q. Was it less than 10?
A. No, it was more than 10.
Q. Was it less than 20?
A. Do you want me to make a guess?
Q. Yes—a well advised guess, if possible.
A. 1951—
Q. I would refresh your recollection that that is the month in which you entered into this contract to furnish fillers to Mr. Brasile and Polivka.
A. Yes. I believe it was in the 30's somewhere, but I am guessing. I reserve the right to correct that if I check my records and find I am wrong.
Q. How many employees did you have at the end of 1952?
By Mr. McCanna: If your Honor please, it doesn't seem to me that this kind of an inquiry is material to the general subject of commercial success. I think it is di-

rected to some other issues that they may be having in some other case.

By the Court: I don't know. It might be.

631 By Mr. Clement: Your Honor, I am connecting it up with Mr. Brasile's effort in the Pure-Pak carton field.

By Mr. McCanna: Well, Mr. Brasile had a contract with him and his contract was to go out and get sales. I don't see how that connects—

By the Court: Well, you mix up other questions with your patent suit, and I don't know how I can keep out other things. Objection overruled.

By Mr. Clement: Will you read the question, please? (Whereupon the question was read as above recorded.)

By the Court: I would be glad to try a patent case again without all these collateral issues that have been brought in in modern days, but I don't suppose I ever will.

By Mr. McCanna: If your Honor please, this case has given me quite a headache because of all these defendants. I wish they were out. I would like to confine it strictly to the patent.

By the Court: Well, the matter is in.

632 By the Witness: Do I understand the question correctly, the number of employees we had at the end of 1952?

By Mr. Clement:

Q. That is correct.

A. Well, I am going to again reserve the right to change this if I find my guess is wrong, but I think in the neighborhood of 45 to 50.

633 Q. How many fillers were sold in the year 1952?

A. 224.

Q. How many of those were for use on paper cartons?

A. 186.

Q. How were those divided between Pure Pak and American Can?

A. 83 for American Can and 103 for Pure Pak.

By Mr. McCanna: If your Honor please, the division between the sale of this invention all the way along the line to each carton, is that material? I would object to that line.

By the Court: No, but here we are throwing in a lot of contracts bearing on the situation. I don't know. Objection overruled.

By Mr. Clement:

Q. In the year 1953, Mr. Mojonnier, how many fillers were sold?

A. 479.

Q. How many of those were for filling American Can cartons and how many Pure Pak cartons?

A. 131 for American Can and 329 for Pure Pak.

Q. And the same for 1954, Mr. Mojonnier?

A. 1954, we sold 470; 79 for Canco and 359 for Pure Pak and some for other paper cartons that year.

634 Q. Do you have any figures for the portion of 1955 that has transpired?

A. You really want to see all my books. Yes, I do. 19 Canco, 67 Pure Pak, 17 Seal King, and some others.

Q. In referring to these models a moment ago, Mr. Mojonnier, I think you were using the word "filler." I wonder if we could clarify what you mean by the word "filler" so we can use it as a term of reference through all of this, keeping in mind what the patent actually covers.

A. When I use the term "filler" here—

By Mr. McCanna: What the patent covers, your Honor, isn't that a legal conclusion? Wouldn't that be objected to?

By Mr. Clement: I am not asking that, Mr. McCanna. I am just trying to get oriented as to what he means by the term "filler" because the patent is for a dispensing mechanism having time controlled flow, and the word filler here has been used to indicate many more things than just that dispensing mechanism, such as in evidence here as Defendants' Exhibit 37. The models show a great deal more.

By Mr. McCanna: We use the words dispensing
635 mechanism because that is a Patent Office classification or designation for machines that do filling and that kind of thing.

By the Court: Read the question. Read the question that was objected to.

(Whereupon the question was read as follows:

"I wonder if we could clarify what you mean by the word 'filler' * * *")

By the Court: I think that is a proper question.

By the Witness:

A. I think we were confining filler to mean a tank unit like we see on each of the various exhibits, like Plaintiff's Exhibit—

By Mr. McCanna: 37.

By the Witness:

A. (Continuing.) —37, which may have one or more spouts and has a timer.

By Mr. Clement:

Q. You mentioned on your direct examination before you were withdrawn from the stand, the fact that you bought the Ward Electric Products Company, is that correct?

636 A. That is correct. The Mojonnier-Dawson Company bought the Ward Electric Products Company.

Q. Yes. I believe you said you took over a filler at that time, from that company?

A. That is correct.

Q. What was the character of that filler, just briefly?

A. That was a vacuum type filler. It is shown in one of the exhibits which is in evidence.

637 Q. I think you mentioned that it was not a sanitary type filler. Could you explain that term?

A. It was a filler which included great lengths of rubber tubing, pipe, fittings, sharp corners, uncleanable surfaces. It was not designed for filling food or dairy products.

Q. You also stated that your first disclosure of this type of filler that is in issue, claimed in the patent, was to the American Can Company, is that correct?

A. To Mr. W. K. Cabot of the American Can Company, I believe is correct.

Q. I call your attention, Mr. Mojonnier, to some correspondence given to us last week, I believe, which you had with the American Can Company, letters starting with the date of July 11, 1946 from the American Can Company. Several letters were exchanged, and then on March 18, 1947, I believe you wrote to Mr. Cabot of the American Can Company a rather lengthy letter, describing the invention in detail and some tests which you had run on it.

Do you have a copy of that letter available?

By Mr. McCanna: I believe it is in evidence here.

638 By Mr. Clement:

Q. Mr. Mojonnier, I am handing you a copy of Plaintiff's Exhibit 26, which is that letter of March 18, 1947, to Mr. Cabot of the American Can Company.

Could you identify what drawings went with that letter, what sketches went with that letter?

A. I can. I believe they are in evidence.

Q. I will hand you, Mr. Mojonnier, the correspondence which I have reference to, and I will ask you some questions about that.

By the Court: It is about adjournment time. Maybe we had better postpone this until Monday morning. Is that agreeable?

By Mr. Clement: Yes, your Honor.

By the Court: Wednesday morning, I mean. As you have probably been advised, we have a conference which we are required to attend on Monday and Tuesday. I will have a few motions on Wednesday morning, but I think you may come in at 10:30, and I will be ready for you by that time.

About how much more time do you think you will take, Mr. McCanna?

639 By Mr. McCanna: I have probably about two days.

By the Court: You think you will take two more days?

By Mr. McCanna: Yes.

By the Court: Including cross-examination?

By Mr. McCanna: Well, it depends on how long the cross is.

By the Court: Yes, I know.

By Mr. McCanna: It would be two or three days.

By the Court: That is your best judgment?

By Mr. McCanna: As I said, I am going to streamline my examination to try to keep to documentary evidence.

By the Court: How much time will you folks take on the defense?

By Mr. Clement: I would say two days.

By Mr. Voland: Including the expert witness.

By Mr. Clement: Yes, or two and a half days.

By the Court: All right, Wednesday morning at 10:30.

640 (Whereupon an adjournment was taken in the above-entitled cause until 10:30 o'clock a. m. Wednesday, May 25, 1955.)

641 Chicago, Illinois,
Wednesday, May 25, 1955,
10:30 o'clock a. m.

Court convened pursuant to adjournment.

Present:

Mr. McCanna,
Mr. McKnight,
Mr. Pillote,
Mr. Allen,
Mr. Clement,
Mr. Voland,
Mr. Houghteling,
Mr. Bernat,
Mr. Kipnis,
And other Counsel.

642 And thereupon the following further proceedings were had herein:

By the Clerk: Case on trial.

By the Court: Good morning, gentlemen.

By Mr. Clement: I would like to recall Mr. Mojonnier to the stand, please.

ALBERT B. MOJONNIER, called as a witness on behalf of the Plaintiff herein, having been previously duly sworn, resumed the stand and testified further as follows:

Cross-Examination (Continued) by Mr. Clement.

Q. Mr. Mojonnier, at the close of Friday's session, I had just taken up the correspondence you had with Mr. Cabot of American Can, in the last half of 1946 and early 1947.

By Mr. Clement: Mr. McCanna, do you have those exhibits or are they in the custody of the Clerk? They are Plaintiff's Exhibits 17 to 30.

By Mr. McCanna: Yes, I have them. Here they are.

643 By Mr. Clement:

Q. Mr. Mojonnier, I hand you those exhibits just referred to. The letter of July 11th, which is Plaintiff's Exhibit 17, I believe refers on the second page to a filler.

Can you tell me what filler was referred to in that sentence? I will read the sentence:

"I think perhaps the drawing you sent me as a tentative proposal for filling milk containers possibly gives this information, but I thought that by this time you might have other literature that would be more useful in discussing the matter with others in our organization."

The question is, Mr. Mojonnier, do you recall what filler that refers to?

A. Yes, sir. I believe it refers to the filler mentioned by Mr. Cabot in paragraph 1 of that same letter, the plunger type liquid filler which we acquired from the Ward Electric Products Company.

Q. Plaintiff's Exhibit 18 is a letter of November 1 from Mr. Cabot to you. That is a letter concerning
644 the syruper, is it?

A. You mean 19? The copy I have is marked 19, is that right?

Q. The letter of November 1?

A. Yes, that is right.

Q. All right, I will correct that. That is Plaintiff's Exhibit 19. That refers to the problem of the syruper for the frozen foods, does it?

A. Yes, it does.

Q. The letter of January 7th from Mr. Cabot to you, Mr. Mojonnier, in its first sentence—and I believe this is Plaintiff's Exhibit 18, is that correct?

A. No, sir. My copy is marked 20.

Q. Plaintiff's Exhibit 20 in its first sentence says:

"What has happened to the new machine that you told me about in your letter of November 12th?"

I don't believe a letter of November 12th was submitted with this material. Do you recall what was in that letter?

A. I have not been able to find the letter of November 12th. While it is a long time ago, the best recollection
645 I have today is that in that letter I told him I had the idea that this syruping problem might be solved by a filler working on the timed orifice principle.

646 Q. The letter of January 10, 1947 from you to Mr. Cabot says, in its first sentence:

"Thanks for your letter of January 7 relative to our syruping machine for paper containers."

The next to last paragraph says:

"If it is not asking too much, could you arrange to send

us a few of the paper cartons so that we can run some tests on our experimental unit."

Was that the experimental unit for syruping paper containers, Mr. Mojonnier?

A. Yes, sir, it was.

Q. Is that a model distinct from any that we have discussed previously?

A. I believe some days ago on direct examination I described the model. It was a laboratory test unit, not a complete unit, but used for making some initial experiments.

Q. That model was then built for experimentation on the syruping problem, is that correct?

A. Yes.

Q. The letter of March 18, Mr. Mojonnier, what exhibit number does that have on it, please?

647 A. Just a moment—26, sir.

Q. Plaintiff's Exhibit 26. Would you please read that first sentence in that letter?

A. (Reading.)

"We have at last completed an experimental model of our proposed unit for syruping American Can frozen food containers and have run quite a few tests on it."

Q. And that is the same model we were just discussing, is that correct?

A. Yes, sir, that is the laboratory model that I was mentioning there.

Q. Will you read the next two sentences, Mr. Mojonnier, please?

A. (Reading.)

"As the matter stands now, we are building this experimental unit into a conveyor and packing table arrangement, which we believe we can place in a frozen food plant here in Chicago for putting gelatin over fruit previously filled into the paper cup. This is a small operation right close to our own plant and will give us an opportunity to see how the unit works, under actual operating conditions."

648 Q. What plant was referred to there in that letter, a plant near your plant in which you were going to test this model?

A. I have no written record that gives me that for sure, but my memory says that it was Skinner & Company at 9 South Clinton, a frozen food broker.

Q. Mr. Mojonnier, I refer you to page 3 of the same letter of March 18th and ask you to read the last sentence of the third paragraph on that page.

A. (Reading.)

"One thing we have noticed is that a minor variation in level affects the filling volume very little, since the flow obviously varies as to the square root of the head."

Q. Was this model ever placed in that Skinner plant?

A. No, sir, it was not.

Q. I believe last week in the record there is an indication that you stated on page 186 that your company was too poor to make a model of this machine and I quote:

"Our company did not have the money at that time
649 to make a filler independently and experiment with it. We were too poor."

You were actually building this model for the Skinner Company, however, is that correct?

A. No, it is not correct. We had hoped that we could mount this laboratory model which is a very inexpensive thing on one of our standard conveyors and get a chance to try it out at the Skinner Company.

Q. Well, Mr. Mojonnier, were you telling the truth in this letter of March 18th in this second paragraph or are you telling the truth now, and I refer you to the second paragraph of the letter where you stated:

"As the matter stands now, we are building this experimental unit into a conveyor and packing table arrangement, which we believe we can place in a frozen food plant here in Chicago."

A. Well, they are both correct. At that time, we were manufacturing conveyors for the chemical industry and I actually did mount this laboratory unit by clamping it onto a conveyor and making a few experiments with it.

650 The conveyor was subsequently sold as a standard conveyor, the unit unclamped from it.

651 Q. Mr. Mojonnier, I refer you to the first sentence in the third paragraph on page 3 and ask you to read that.

A. The third paragraph?

Q. Yes, the first sentence in the third paragraph on page 3 starting with "The problem of maintaining."

A. (Reading.)

"The problem of maintaining a uniform level in the filling tank has received quite a bit of attention and the

unit we are preparing for our local prospect is shown in the sketch."

Q. And it is now your explanation that you were actually not building that model?

A. I think it is very clear, sir, from the fact that this was a local prospect; we hoped that we could put it in there. When we tried to get their permission to get it in, the folks didn't think it could possibly work and we couldn't make arrangements to put it in.

Q. Mr. Mojonnier, in your direct testimony, in referring to the letter of July 11th which we just referred to a moment ago, you said, and I am quoting from page 169
652 of the record—you are referring to Mr. Cabot and his letter. You say:

"He wanted a machine to put this syrup over the fruit into the paper cartons. He asked me in the letter if I would try to develop such machine, and asked if I had any ideas.

"Q. And what was your response to that?

"A. My response was that I would be happy to see if any of the machines that we had could be adapted, either in whole or in part, to this job, and that I would try to develop something for this purpose.

"Q. At that time, did you have any ideas about fillers operating on any principle other than the types that you have been previously telling about?

"A. You mean in July?

"Q. Yes."

You answered, Mr. Mojonnier, "No, I did not. My first move was to see if we could adapt the types of fillers we were then making, which included a vacuum filler and a small piston type to do this job. I made some sketches
653 along those lines but was never able to work out anything satisfactorily."

Now, referring again to this letter of March 18th, Plaintiff's Exhibit 26, Mr. Mojonnier, I will ask you to read the paragraph at the top of page 2.

A. (Reading.)

"The filling device itself is nothing but a stainless steel container with a poppet type valve at the bottom."

Q. Read the paragraph, please.

A. The paragraph? Certainly.

"This valve is opened by a solenoid on the lid of the container. A constant level of liquid is maintained in the container, giving a constant head to force the product

through the outlet valve. An electronic timer is used to actuate the solenoid for a measured interval for each filling."

654 Q. Does that paragraph which you have just read describe precisely the invention you subsequently conceived?

A. I think what—

Q. I am referring back—

A. I beg your pardon.

Q. Was it conceived after that letter to Mr. Cabot in which you said—that letter we just referred to of Mr. Cabot's of July, 1946, does this paragraph describe the invention which you conceived in response to his request?

A. Well, the first thing I did, as I testified, in response to his request—

Q. Mr. Mojonnier, my question was: Does this paragraph describe the invention you subsequently conceived after the request from Mr. Cabot of American Can?

A. Well, this describes the fillers which I did conceive after July 11, 1946, but there were intervening things that happened.

Q. Mr. Mojonnier, will you read the next paragraph?

A. (Reading.)

655 "Some years ago we tried this type of filling, using older types of timers and were unsuccessful. All of these timers incorporated ratchets, clutches or dash pots and would not give a uniform time interval. The timer we have selected for our present machine is a unit developed recently by Photo Switch, Incorporated, which is based on the principle of discharging a condenser through the grid circuit of a conventional three element vacuum tube, the interval being measured by the length of time of such discharge. A wide variation of interval is possible by varying the condenser capacity which is accomplished with a couple of dials on the unit."

Q. Mr. Mojonnier, that paragraph you just read and particularly the first sentence, indicates that you had tried this type of filling some years ago. You, a moment ago, said that your conception of this invention was after you had been in communication with Mr. Cabot.

Now, were you telling the truth when you said you conceived it after Mr. Cabot—when you picked a date after your correspondence with Mr. Cabot, or were you telling the truth in this letter when you say you had been ex-

656 perimenting for some years with this same invention?

A. Both of my statements were true, Mr. Clement. The trials that I made, as I stated before, were in a different conception.

Q. In what way?

A. Those trials were in 1934 at the Mojonnier Brothers where I hooked a solenoid valve to the bottom of a large tank. I attempted to use a timer on a solenoid valve.

That is an entirely different conception than the present filler.

Q. How does it differ from the description in the first paragraph on page 2?

A. I made no attempt in the earlier experiments to control the hydrostatic head. I had no conception of the relationship required between the hydrostatic head--

Q. Mr. Mojonnier, excuse me. Will you read, please, the third sentence in that paragraph at the top of page 2?

A. (Reading):

"A constant level of liquid is maintained in the container, giving a constant head to force the product through the outlet valve."

657 Q. Is there any difference between a constant hydrostatic head or a constant level of liquid or a constant head as mentioned in that sentence?

A. No, but as I said a moment ago, I hooked a solenoid valve to the bottom of a large tank—

658 Q. Mr. Mojonnier, you said you did not have a constant hydrostatic head in your earlier experiments, or words to that effect?

A. That is correct.

Q. I am asking you now as to this sentence we just referred to. Doesn't it talk about a constant head? It leaves out the word "hydrostatic" I admit, but it talks about a constant head of liquid, is that correct?

A. Yes, it talks about a constant head of liquid.

Q. The second paragraph said:

"Some years ago we tried this type of filling"

does it not?

A. Yes, it does.

Q. It says:

The only thing was, you couldn't find a timer that was completely satisfactory isn't that right?

A. That is what the words say, but the fact is, the test I made in 1934 did not include a unit with a constant hydrostatic or a constant liquid level.

Q. Mr. Mojonnier, some years ago, would put you

at the time you were employed by Mojonnier Brothers,
659 is that correct?

A. That is correct.

Q. And you were employed there on research and development of fillers, is that correct?

A. In part.

Q. Mr. Mojonnier, had any of these exhibits we have just referred to, Plaintiff's Exhibits 17 to 26, been altered in any way?

A. No, sir.

Q. Have the carbon copies of the letters you wrote to American Can been in your custody and control since the original letters were prepared?

A. As nearly as I can recall, I assembled this group of papers from our general file in 1949 and they were in a folder in the back of my desk from that time until—they were taken out for this purpose.

Q. Have those exhibits which are sketches or copies of sketches forwarded with these letters, also been in your custody and control since that time?

A. Yes, sir.

Q. And you have kept them where since their original preparation?

A. Well, as I said, I assembled them, I think, in 1949 and I kept them in a drawer in my desk.

660 Q. They were written in 1947 and 1946, is that correct?

A. That is correct.

Q. Where were they prior to that time?

A. In our general file and in our blueprint drawers.

Q. Mr. Mojonnier, why were these letters not produced at the time of the taking of your deposition on December 7th and 8th of 1954?

A. Well, I believe I explained that. I thought that we were talking then about the Bowman machine and these were entirely different material.

661 Q. I believe you made a statement at the time you filed your deposition that I just referred to, is that correct, before you signed it?

A. Yes.

By Mr. Clement: Is that deposition available?

By the Clerk: What date?

By Mr. Clement: December 6th, 7th and 8th, the deposition of Albert B. Mojonnier.

I would like to ask the Reporter to mark this deposition for the purpose of identification as Defendants' Exhibit 5.

(Thereupon said document was marked Defendants' Exhibit No. 5 for identification.)

By Mr. Clement: I will hand this to the Court.

By Mr. Clement:

Q. Mr. Mojonnier, you are quite certain that these reasons that you just mentioned or this reason is the only one why these exhibits were not produced?

A. Well, there is another thing that occurs to me, Mr. Clement.

662 These were given to McCanna & Morsbach. I think I made a mistake when I said they were in the drawer continuously, because they were given to McCanna & Morsbach during the time our patent was pursued, so I think I should change that. I don't think that was correct, that they were in the drawer all the time.

Q. My question was, Mr. Mojonnier: Is the only reason they were not produced the fact that you thought I was talking about the Bowman machine so-called?

A. I believe that is correct, sir.

Q. Mr. Mojonnier, do you recall that I took your deposition on December 6th, 7th and 8th, 1954, at my office at 38 South Dearborn, in the library, before Miss Anita Man, notary public?

A. Yes, I do.

Q. Pursuant to previous notice.

Let me read you a portion of this testimony, Mr. Mojonnier, and see if you recall it.

I believe you had just handed me two drawings numbered S-601, S-602, dated January 27, 1948.

By the Court: What page are you on?

By Mr. Clement: I am on page 63.

663 Q. I am on page 63, and you identified them as two drawings which were in existence prior to the shipment of the Bowman machine.

As indicated on page 63 of the record, I said:

"Are these the only drawings that were sent to Mr. Zinn these that you have handed me?"

Your answer was:

"They are the only ones of which I have a record. There is a tracing in our file which I did not bring because you didn't ask for it, which is a predecessor of these drawings.

It gives practically a full size idea of the cross section of this machine and a general idea of the base."

We went on talking about that particular drawing, and I asked for the date, and then on page 64, I said:

"When you say tracing, just what do you mean?"

And you answered:

"A tracing is a drawing in pencil or ink on this paper suitable for reproduction."

664 And I said:

"You didn't bring that with you?"

And you said:

"You didn't ask for drawings."

I said:

"Do you have other drawings?"

And you said:

"I have drawings of some of the equipment that we have made, but I have no drawings of the filler made prior to the Bowman venture."

Then Mr. McCanna stepped in and said:

"I think possibly the witness is confused. I think he is being too technical about what you mean by drawings, and also as to time, and I will explain this: When he said you hadn't asked for drawings, you used in the subpoena the term records."

Then, Mr. Mojonnier, I think you recall we had a discussion about the meaning of the term "records".

On page 65, I said:

"May I then request that we be furnished with at least the opportunity to make photostats of all sketches, drawings, and other physical representations of any models

665 of machines which were the predecessors of the machine which is the subject matter of the patent, or the machine which is the subject matter of the patent? I have attempted to define very specifically all of the representations in which we obviously would be interested in order to fully fullfil the purpose of our interrogation."

Then Mr. McCanna said, after another comment of mine:

"We will be glad to furnish everything we have for your inspection, and now that you have made known specifically what you want, we will make a further search and dig up everything we can."

Then on page 66, just to make it absolutely clear, I said:

"I, of course, by that definition include such representations of machines, whether they were actually reduced to

a model or not. It sounds a little as though I meant things that were only made into a model form. I also intend to include, obviously, photographs."

666 Do you recall that, Mr. Mojonnier?

A. Yes, sir.

667 Q. Do you still maintain you thought I was talking about the Bowman machine?

A. Mr. Clement, just before I signed this deposition, for the first time I read it very, very carefully, and I realized in reading that over that you meant more than the photographs in that last statement.

Then I thought of these things, and thought that you probably had reference to laboratory model sketches. That is why I put them in just before I signed the deposition.

Q. Mr. Mojonnier, I am going to ask you if you recall some further conversation or testimony at that deposition, on page 129 of the deposition. This was the next day, you recall.

I said:

"Mr. Mojonnier, yesterday we had some discussion regarding drawings and sketches, and in response to a request on our part I believe you have brought some additional material with you today.

"May I first ask if any of that material has a date, in those cases where they are dated, earlier than April 668 4, 1948?"

You recall that April 4, 1948 was a date one year prior to the filing of your application.

You answered:

"A great deal of it obviously is not dated, but part of it does come prior to April 4, 1948."

I asked you to produce the material and then I said:

"Mr. Mojonnier, I will ask you first of all to identify any of that material which either bears a date before April 4, 1948, or which you believe probably was prepared prior to that time."

Then you introduced a set of sketches which you had prepared of the Bowman machine, which sketches have been introduced in this record, I believe, as Plaintiff's Exhibit 35, the twelve sheets of sketches that you prepared of the Bowman machine.

Do you recall that testimony, Mr. Mojonnier?

A. Yes, I recall that I brought in a great many sketches and drawings at that time.

669 Q. And even though I said all sketches relating to the machines which were the predecessor of the laboratory model, you thought I was talking about the Bowman machine, is that correct?

A. Yes, sir. That was the first machine, sir.

Q. What do you mean by that last statement?

A. Well, that was the first filling machine that was made on this conception that I had.

Q. You are distinguishing between experimental model and machine, is that correct?

A. Yes, sir. The experimental model was not a machine. It could not have been used in a plant.

Q. Mr. Mojonnier, when I said predecessors of the machine, whether they had been reduced to model form or not, when I was asking for sketches, was it your opinion at that time that I was talking about the Bowman machine?

A. At that time it was. When I read the deposition through very carefully, I began to see that maybe you had something else in mind, so then I brought out these sketches and letters and put them in.

Q. Do you recall this, on page 138 of the deposition, I asked:

"I would like to ask again, Mr. Mojonnier, if we
670 have at this time covered everything that would presently appear, at least, to be prior to April 4, 1948, of the material you have today?"

Mr. McCanna stepped in and said:

"Now, just a minute. I will make an objection to that, because to be perfectly frank, we will have our day in court to explain all these things, and give the full story." What he meant by that, I don't know. I then answered:

"I don't think you understand. I was merely asking him again if we had now discussed all of the material which bears a date prior to April 4, 1948, or which in his recollection was made prior to that date, and he has already answered me, I think, twice on that score."

Mr. McCanna: If your Honor please, the witness has produced these records, these drawings and attached them to the deposition before he signed the deposition.

Now we come in here in good faith in that, and when we reconsidered the deposition and checked these matters,
671 why, we presented all of this correspondence and the sketches that go with it pertaining to American Can. That is all in the deposition.

672 By Mr. Clement: If the Court please, I would like to explain that four days before we actually started the trial of this case, we were presented with this material for the American Can Company, the correspondence relating thereto, Plaintiff's Exhibits 17 to 30, I believe it is. I might also point out that I had been asking Mr. McCanna to arrange for Mr. Mojonnier's execution of that deposition which was taken in December for possibly three or four months, and he kept telling me that there was something they wanted to do in connection with that deposition.

Now I am merely trying to show, your Honor, that there was very pertinent evidence relative to the question of public use and sale which was not submitted at the time of the deposition. I would like to read one more portion of this record to show that this is extremely pertinent.

By the Court: Go ahead.

By Mr. Clement: On page 21 of this record of the 673 deposition I asked you, Mr. Mojonnier:

"Did you ever receive an inquiry from the American Can Company?"

Your answer was:

"Well, I have worked with the American Can Company closely since the early 30's, and I know that one of the first projects that we ever had when we started Mojonnier-Dawson was a proposal by American Can that we make their model—well, it is now their Model 334 filler; it was then a new model they wanted developed, and they also wanted us to develop a vacuum syruper for them, and undoubtedly I must have told them about this idea, although nothing was ever made for them at that time."

Now when we were referring prior to that conversation, when you said "this idea," we had been referring prior to that conversation to the time controlled flow mechanism.

By Mr. Clement:

Q. I ask you, Mr. Mojonnier, do you recall that 674 answer to my question about the American Can Company?

A. Yes, sir, I do.

675 Q. And you had these records from the American Can Company under your custody and control, as you just said a moment ago?

A. Well, I knew they were in existence.

Q. And your answer about the American Can Company

relative to the, not the vacuum type syruper, but the syruper which you actually tried to develop for them and submitted sketches and letters to them about, you referred to that when you said "Undoubtedly I must have told them about this idea," is that correct?

A. Yes, sir. I tried my best to sell them on the idea of letting me make a machine for them, but I never made anything for them.

Q. And it is still your position that you thought when I asked for sketches, that I was talking about the Bowman machine?

A. There was a day that intervened between there and when—

Q. There was not a day that intervened. I asked you on that same day, later in the record, when you started quarreling with me—excuse me. Strike that—when you started contending that the term "record" did not include drawings or sketches, or your attorney did so.

676 I asked you to produce, and I defined as best I knew how, every possible sketch that would have been related to this invention. Is that correct?

A. I repeat, Mr. Clement, that I understood at that time that you were referring to sketches and drawings of machines that we had made. When I read the d position later for the first time, I realized you might have meant something else, and that is why I put these American Can items into the thing before I signed it.

Q. Mr. Mojonnier, do you recall in discussing the records of the sales of the Bowman Dairy Company, you said on page 35 of the record of the deposition:

"I have the original sheets from our profit and loss ledger, sales ledger to be more exact, or sales journal to be more exact, showing that on April 30th we credited to an account which we at that time called Syruper, and which had been dead, the sum of $385, and later changed that account number 420, to read, 'Electromatic filler.'"

Do you recal that, Mr. Mojonnier?

A. Yes, sir.

677 Q. And subsequently, still on the first day of our deposition, at page 77, after a short recess, I asked you:

"Mr. Mojonnier, you referred to that first machine, I believe it was, as the syruper, is that right?"

Your answer was:

"No."

I said:

"Or was that the second one?"

And you said:

"No machine we have testified to as a syruper. Let me explain where that syruper column is in our journal. During 1946 and '47 we were negotiating with the American Can Company, you brought that out when you asked about the American Can Company, for the construction of a vacuum syruper, and a column was made for it in this journal and never used. This filler was simply put into that column as a matter of convenience, and the column later changed to filler."

Mr. Mojonnier, were you not negotiating with American Can about something other than a vacuum type 678 syruper?

A. No sir. I was unable to sell Mr. Cabot on the idea of letting me make a time controlled syruper, and I have submitted to you a blueprint of the vacuum type filler—

Q. My question was, were you not negotiating with American Can about a syruper which was not a vacuum type syruper?

We read your letter of March 18 just a moment ago, where you offered to him a syruper which was not a vacuum type syruper, but incorporated the invention that is before us today.

A. I tried to sell him on that idea, and failed.

679 Q. Mr. Mojonnier, why didn't you mention the syruper referred to in this correspondence with American Can, which was actually the first machine that you testified to a while ago, and which was not a vacuum type syruper but a time controlled flow mechanism? Why didn't you mention that at the time you were giving your deposition?

A. Mr. Clement, I am sure that in that deposition I very fully described to you the laboratory machine, told you what we had done with it and how we made tests on it.

Q. But you didn't tell me anything about your negotiations with American Can relative to this laboratory machine, did you?

A. No, I didn't.

Q. Mr. Mojonnier, I think in your direct testimony in the record at page—I don't have the page number, but I believe you testified that you had relations with Mr. Julius

Zinn relative to this time controlled flow mechanism, is that correct?

A. Yes, sir.

Q. Did you made a disclosure to Mr. Zinn of the invention?

A. After the Bowman machine was completed, I
680 described it rather thoroughly to Mr. Zinn, yes, sir.

By Mr. Clement: I would like, Mr. McCanna, if it is available, the correspondence relative to Mr. Zinn from Mr. Mojonnier in 1947, which was identified by stipulation in the deposition of Mr. Mojonnier in December as Defendants' Exhibits L-1 to L-12.

By Mr. Clement:

Q. While Mr. McCanna is looking for those, Mr. Mojonnier, what use was Mr. Zinn contemplating of your filler?

A. Well, I had told Mr. Zinn I had an idea for a filler and thought I could develop one. He wanted me to develop it so that it could be used by dairies to fill his proposed paper cartons.

Q. Did you get in touch with Mr. Zinn or did he get in touch with you?

A. My earliest recollection of a contact with Mr. Zinn after Mojonnier-Dawson Company was organized is that Mr. Zinn called me on the telephone in the summer of 1946, reminded me that he had talked to me from time to time
681 when I was at Mojonnier Brothers Company, and said that he was still working on his proposed machine for making paper cartons.

Q. Did you have correspondence with Mr. Zinn?

A. Yes, I believe that he asked me in the telephone conversation to send him prints of what types of filling machines we were marketing, and I believe that I sent him those.

By Mr. Clement: Do you have those, Mr. McCanna?

I will ask the Reporter to mark these letters I have just referred to from Mr. Zinn and to Mr. Mojonnier as Defendants' Exhibits for identification 12 to 23, inclusive.

I will ask the drawings with the January 9th letter from Mr. Zinn to Mojonnier be marked Defendants' Exhibits 15-A and 15-B for identification.

(Thereupon said documents were marked Defendants' Exhibits 12 to 18 inclusive, for identification.)

682 By Mr. Clement:

Q. Mr. Mojonnier, I will hand you exhibits now marked for identification Defendants' Exhibits 12 to 18. Mr. McCanna is still searching for the other exhibits.

The first letter is the letter of August 28 from Mr. Zinn to Mr. Mojonnier, Defendants' 12 for identification, and in that letter he announces that he is working on his packing machine. Is that correct?

A. That is correct.

Q. The second letter, October 20, 1947, marked Defendants' Exhibit 13 for identification, is a letter from Mr. Zinn to you.

Will you read the last sentence of the third paragraph, Mr. Mojonnier?

A. (Reading):

"I am sure that you now understand that which is needed, and recognize the tremendous sale for such a filler as you have developed for paper containers."

Q. The letter of November 4, 1947, marked Defendants' Exhibit 14 for identification, I wish you would refer to now, Mr. Mojonnier, and can you tell me what that letter is?

683 A. That is a letter that I received from Mr. Julius Zinn stating that he had had some conversations with the Golden State Company.

Q. Will you read the last sentence of the third paragraph, Mr. Mojonnier, please?

A. (Reading):

"I also explained to them that you had perfected a Filler and that you are now in the process of laying out the Closer-Sealer for such Filler."

Q. I refer you now, Mr. Mojonnier, to Defendants' Exhibit 16 for identification, which is, I believe, a letter of November 3, 1947, is that correct?

A. Yes, from Golden State Company.

Q. From Golden State to you?

A. Yes, sir. I have it.

Q. What is that letter, Mr. Mojonnier?

A. It is a letter from the Golden State Company to me, stating that they had had a call from Mr. Zinn.

Q. Who was the letter from? Who was it signed by?

A. From Walter Dorwaldt.

Q. Who was Walter Dorwaldt?

A. Walter Dorwaldt was the purchasing agent.

Q. What does the letter say?

684 A. He says that Mr. Zinn, Jr. of the Zinpak Corporation called on him October 30th, and so on.

685 Q. Would you read the second paragraph of that letter, please—well, pardon me. I think we had better read that whole letter, Mr. Mojonnier.

A. Very well.

"Mr. Zinn, Jr., of the Zinpak Corporation, called on me October 30, and told me about some of the developments you have made on equipment for use on the Zinpak bottle. He stated that you had developed a filler, a closing machine, a heat sealer and an automatic case filler.

"We have become interested in the Zinpak bottle to the point where we want to make a cost study. This will be on quarts, pints, and half pints. For this reason we would like to know your prices on the equipment mentioned above (and on any other equipment you have which pertains to this container). We understand your filler to be electronically controlled. In quoting your price, please give us shipping dates and terms of payment in cash. Also, kindly give us any pertinent data about their operation.

686 "Mr. Zinn informally expressed the thought that you could make shipments on any and all your machines four months after receipt of an order. Is this correct?

"Very truly yours,

Walter Dorwaldt,
Purchasing Agent."

Q. I refer you now to Defendants' Exhibit 17 for identification, and ask you what that letter is, which is dated December 3, 1947, and who it is from?

A. That is a followup letter from Walter Dorwaldt because I hadn't answered his original letter.

Q. I refer you now to Defendants' Exhibit 18 for identification, which is a letter of December 16. Would you identify that letter?

A. That is a carbon copy of a letter I finally wrote to Walter Dorwaldt, after trying my best to find out what Mr. Zinn had told him because, obviously, the representations that he had gotten weren't facts.

Q. I call your attention, Mr. Mojonnier, to page 2 of
687 that letter, and that paragraph having the indented portion in it at the bottom of the page.

A. Yes.

Q. Would you read that paragraph, starting with "For the present—".

A. (Reading):

"For the present, it appears that two types of units will sell:

"First, a unit for the small dairy which will be hand fed and for hand casing, which will embody a filler, a conveyor, a closer and a sealer. This unit will sell for under $5,000 complete.

"Second, a unit for the larger dairy which will dispense, fill, close, seal and case. This will sell for something like $9,000."

Q. And the date of this letter? What was the date?

A. December 16, 1947.

Q. What was the date of the filing of your patent application, Mr. Mojonnier? Referring to the filling mechanism in suit.

688 A. I believe it was April 4, 1949, was it not?

Q. I believe that is correct. This is, therefore, considerably more than a year prior to that date of filing?

A. This date is, yes, sir.

By Mr. Clement: Mr. McCanna, have you located the rest of those exhibits?

By Mr. McCanna: I don't seem to find the originals. I have some carbons of them. They could have been transferred over to our Zinn file because they are dealing with the Zinn matter.

By Mr. Clement: I would be glad to stipulate with you, if you care to, that we use the photostatic copies since you are not able to find the originals.

By Mr. McCanna: Yes. I believe I will have them somewhere. I perhaps can locate them during the recess.

By Mr. Clement: May we proceed and use these now and substitute the originals when we find them?

By Mr. McCanna: Oh, yes.

689 By Mr. Clement: They would be the ones marked at the time of the deposition 9 through 12.

I will ask the Reporter to mark these exhibits, which are photostats of the original exhibits at the time of the deposition, Defendants' Exhibits 19 through 23 for identification.

(Thereupon said documents were marked Defendants' Exhibits Nos. 19 to 23, inclusive, for identification.)

690 By Mr. Clement:

Q. Mr. Mojonnier, referring back for a moment to this letter from you to Mr. Dorwaldt at Golden State, Defendants' Exhibit 18 for identification, I will ask you to look at the third paragraph on page 2.

Would you read that paragraph, please?

A. (Reading):

"More complete prints will be available shortly. The filler unit is well along and an experimental unit has been tested here. The conveyor unit has been designed and some material obtained for the first unit but assembly has not been started. The dispenser unit has not been started and it is expected that the first units will be furnished without this."

Q. Mr. Mojonnier, I now hand you Defendants' Exhibits 19 through 23 for identification. I will ask you to read the first sentence of the letter, which is Defendants' Exhibit 19.

Identify first what that letter is, please.

A. Well, it is a letter from Zinpak, Julius Zinn, to me.

The first sentence is:

691 "Thank you very much for your letters of January 22nd, and we beg to advise that we have already dispatched the information to the California office of the Container Corporation of America, who are working with Golden State."

Q. Mr. Mojonnier, do you know where your copies of those letters of January 22nd that Mr. Zinn refers to are?

A. I don't think I do at this time, Mr. Clement. I might be able—I know I—

Q. Would you produce them, please?

A. I beg pardon?

Q. Would you produce them, please, if you have them?

A. I don't know whether I have those or not.

Q. Do you recall what they were?

R. I don't at the moment, sir. I produced all the Zinn correspondence I could find at the time of the deposition.

Q. May I refresh your recollection that this letter apparently followed your letter to Golden State, and I believe from the sense of this letter of January 26 there was some information, reading that first paragraph indicates that there was some information given to Mr. Zinn by

692 your letters which are missing of January 22nd.

Do you recall what that information might have been?

A. Well, I know what the facts were at that time, that I was doing my level best to get this idea that I had worked up into a filler; that I was experimenting with this laboratory model that I described.

Q. Mr. Mojonnier, do you recall what was in these letters that are missing from the file?

A. I don't at this time, sir.

Q. Thank you.

Did you search for these letters in December at the time of the deposition?

A. Yes, sir. I have searched our files very diligently and brought out everything that I can find.

Q. So as far as your present knowledge is concerned, these letters are not in your files?

A. If they didn't show up at that deposition, they are not in our files.

Q. Mr. Mojonnier, in your testimony, direct testimony, you related the circumstances surrounding the sale of the filler to Bowman Dairy Company, is that correct?

A. Yes, I did.

693 Q. How did you happen to get in touch with the Bowman Dairy Company?

A. As I recall, Al Geiss called me one day and asked if I had any better ideas than that rather expensive and complicated vacuum machine that I had made before the war for making a filler for filling whipping cream into cans. I told him I thought an idea that I had and was trying to develop into a filler might do the job, would he like to discuss the matter.

694 Q. You indicated, I believe, on your direct testimony that following the testing of the machine by the Bowman people at your plant, you talked to Mr. Geiss about what would be charged for this machine, is that correct?

A. Yes, that is right.

Q. You referred, I believe, to a letter of February 20, 1948, your copy of which apparently is not available. Could you explain what was in that letter of February 20?

A. Yes. As best I can recall, I set forth in that letter the tentative agreement that we had made in our meeting in February: That we estimated that the material and labor cost for making the first filling machine, according to my ideas, would be $385; that Bowman Dairy Company were to place an order with us for a filler on what amounted to a trial basis or experimental basis, and if the filler

worked, they were to keep it. If not, they were to return it, and we were to refund their money. But in any case to compensate us for our expenditure of material and labor, they were to pay for this unit on the regular terms.

695 By Mr. Clement: Mr. McCanna, do you have the Chase Products order blank which was marked Defendants' Exhibit K-1 in the December deposition of Mr. Mojonnier?

By Mr. Clement:

Q. While he is searching for that, Mr. Mojonnier, I will ask you if there was a regular order blank used in the order which was entered for Bowman Dairy?

A. The order which we received was Bowman Dairy's own purchase order. We do not use our own order blanks with companies that are recognized like Bowman. We accept their purchase orders.

By Mr. Clement: I will ask the Reporter to mark this Chase Products Company order of July 21, 1948 as Defendants' Exhibit No. 24 for identification.

(Thereupon said document was marked Defendants' Exhibit No. 24 for identification.)

By Mr. McCanna: I believe this is not material. It is not prior to any statutory period. It is months and months inside that yearly period, and it would seem not

696 material.

By Mr. Clement: If the Court please, this is a later order, it is true, but it is an order for this machine from the Chase Products Company dated July 21, 1948. I am merely going to try to connect this type of order with the type of order that was entered by the Bowman Dairy Company to see whether or not this is a standard form that was used by the Mojonnier-Dawson Company.

By the Court: Very well.

By Mr. Clement:

Q. Mr. Mojonnier, I hand you this order from Chase Products, marked for identification as Defendants' Exhibit 24, and ask you if that is an order blank of the Mojonnier-Dawson Company?

A. Yes, sir, it is.

Q. What is the subject of that order?

A. "1—M-D Electromatic filler for insecticide bombs."

Q. Was this a conditional sale?

A. This was not a trial sale in that sense of the
697 word. This order blank has some forms of the conditional sales contract as we referred to it for credit purposes in the trade.

Q. I believe you testified that the order from the Bowman Dairy Company was a conditional order, is that correct?

A. I think I said conditional or trial order. The conditions were not the conditions in this order, and this order blank was not used in the Bowman order. We accepted Bowman's own order on their own purchase order blank.

698 Q. You received a copy of that purchase order blank?

A. I didn't hear the question.

Q. Excuse me. Did you receive a copy of that purchase order blank?

A. Yes, sir. Yes, sir, we did. We received the original.

Q. But you do not have that available now?

A. No, sir. That evidently was destroyed. I have diligently searched for it. I cannot find it.

Q. And you do not have the letter of February 20th?

A. No, sir, but I did sometime ago see a copy of that order and I believe I could quote the exact wording of Bowman's order.

By Mr. Clement: Mr. McCanna, do you have the H-group of exhibits which were identified in the December deposition of Mr. Mojonnier, relating to the Bowman Dairy Company?

By Mr. McCanna: Yes, I have a copy.

By Mr. Clement: May I have those, please?

By Mr. McCanna: It isn't in this folder but I have a carbon. I should have a photostat copy of this.

By Mr. Clement: Do you have that photostat
699 available? Do you know which one that is?

By Mr. McCanna: Offhand, I don't no. I will have to locate it.

By Mr. Clement: Would you check, Mr. McCanna, please, to see if perhaps it was introduced separately yesterday?

My associate tells me that this has already been introduced as Plaintiff's Exhibit 38, this letter that we were just searching for. Do you have those exhibits that have been introduced?

By Mr. Clement:

Q. Mr. Mojonnier, I am now referring to Plaintiff's Exhibit 38 which will be handed to you in a moment and you recall, I think, that you made a compilation of what you estimated the costs of the original Bowman machine to be on a sheet of paper which is this exhibit.

I will hand you that Plaintiff's Exhibit 38 and I see now that they are two separate pieces of notepaper dated 4/12/48. Can you identify those, Mr. Mojonnier?

A. Yes, sir.

Q. The first sheet contains a column, "Cost of the individual elements that went into the machine," is 700 that correct?

A. That's right.

Q. And what is the total at the bottom?

A. $208.

701 Q. And what figure did you give in your direct testimony as being the figure that you charged the Bowman Dairy Company?

A. I gave a figure of an estimate that Mr. Geiss and I had made of what the cost might be.

Q. I don't think you understood my question.

A. I am sorry.

Q. What charge did you make to the Bowman Dairy Company?

A. $385.00.

Q. You testified, Mr. Mojonnier, that this machine that was sold to the Bowman Company was put in an experimental line, is that correct?

A. Yes, sir, that is correct.

Q. And that line was used to fill pressurized whipped cream containers, is that correct?

A. Yes, sir, after the experimental period.

Q. After the experimental period?

A. Well, we filled a few during the experimental period but just for experimentation.

Q. What type of fillers did you fill—excuse me—containers did you fill?

A. I believe I testified and it is a fact that—

702 Q. Were there two types?

A. Yes, there were.

Q. What were those two types?

A. Well, the ones we experimented with were cans, 12-ounce cans, identical in shape although not in outside finish to the cans that are in the court room.

Q. Did you experiment with the so-called M-100 type?

A. Later on, in late April or May we did fill some of those. I don't know that—I couldn't say for sure they were called the M-100's but they were stainless steel fountain containers.

Q. I asked you if you experimented with those and you did say you filled them. Are you distinguishing between experimentation and filling?

A. The initial experiments on that machine were to see whether it would work at all or not and that was done on 12-ounce cans. After that, we filled both cans and these fountain containers.

Q. When you say "we" you mean you filled some of the M-100 cans yourself in experimentation?

A. I can't recall at this time whether I personally filled any of those cans or not.

703 Q. What are the M-100 cans or what were they?

A. You refer to M-100 and I don't recognize that nomenclature.

Q. I will ask you, Mr. Mojonnier, were they cans that were used by the drug stores for dispensing whipped cream in addition to those that you were experimenting with that you characterized as the pressurized cans?

A. Are you referring to both as cans, Mr. Clement? I don't want to split hairs, but these are cans and the others are stainless steel containers with a special design, with a threaded top for reuse.

704 Q. Are they known as M-100's do you know?

A. I don't know. They may be.

Q. When was this Bowman machine paid for, Mr. Mojonnier?

A. The first few days in May of 1948. I think it was May 6th.

Q. And you made regular entries in your journals regarding this sale to the Bowman Company, did you?

A. I didn't personally, no, but they were made.

Q. They were made by the proper employee of your company?

A. Correct.

Q. Did you have any correspondence with the Page Dairy Company prior to this time?

A. I believe that I did. That came up in the December deposition, did it not?

Q. Yes, sir. Was there a disclosure made to the Page Dairy Company of this invention?

A. I believe I told them I was working on this idea and hoped to develop it into a filler.

By Mr. Clement: Mr. McCanna, do you have Exhibit N-1 from the December deposition? It is a letter dated February 9, 1948, to a Mr. William C. Larsen.

705 By Mr. McCanna: Well, I am looking for it but I believe I have a photostatic copy.

By Mr. Clement: Well, could we mark that one temporarily for identification as Defendants' Exhibit 25?

(Thereupon said document was marked Defendants' Exhibit No. 25 for identification.)

By Mr. Clement:

Q. Mr. Mojonnier, while we are waiting for the production of that document, may I ask you if these pressurized containers of the type that you did experiment with, the small ones, for household use, were being used at that time very extensively in dispensing whipping cream?

Do you have any knowledge of how widely they were being used?

A. Well, my information is that Bowman was the first actual use.

Q. Did they have any difficulty getting a satisfactory nozzle for the container?

A. In that period there was a great deal of experimentation going on on nozzles. I presume that might be true. I don't know of my own knowledge.

706 Q. Was that part of the experimentation that was being carried out in that line that you referred to?

A. Bowman may have carried on some experiments but that was not part of my work on the machine. I had nothing to do with the nozzle.

By Mr. Clement: Do you have that exhibit, Mr. McCanna?

By Mr. McCanna: I have been looking for those marked "M" but now that you say "N" here is a series of the "N" exhibits.

By Mr. Clement: Thank you.

I will ask the reporter to mark this photostat of the Page Milk Company—of the letter to the Page Milk Company of February 9, 1948, as Defendants' Exhibit 25 for identification and the second page thereof as Defendants' Exhibit 26 for identification.

(Thereupon said document was marked Defendants' Exhibit No. 26 for identification.)

By Mr. McCanna: I believe that I have the originals here.

By Mr. Clement: Do you have this letter, Mr. McCanna?

707 By Mr. Clement:

Q. Mr. Mojonnier, I hand you this photostat which has been marked Defendants' Exhibit 25 for identification and ask you, what is the character of that letter?

A. That is a sales letter stating what we are developing for Zinpak paper cartons.

Q. What is the date of that letter?

A. February 9, 1948.

Q. To whom is it addressed?

A. Mr. William C. Larsen, Page Milk Company, Pittsburgh, Pennsylvania.

708 Q. And the second page of this letter, Mr. Mojonnier, will you read, starting with: "We quote as follows:"

A. Certainly.

"We quote as follows:

"1. Filling—"

I can't read the next word, but I believe it is:

"—closing and sealing unit as outlined above and as shown on sketch #S-602 for handling Zinpak containers for milk, including all accessories necessary for operating, motor starter, and services of our superintendent of erection to assist you in setting up the unit, and instruct you in its operation.

"The price will be —$4750.00."

Q. And what is the rest of that quotation?

A. (Reading):

"Terms one-third cash with your order.

"Balance 30 days net from the date of shipment.

709 "Delivery three to four months from receipt of order."

Q. The next?

A. (Reading):

"This price is subject to change without notice, in view of the fact that this is a development item, and if any changes are made, it may affect the total cost of the unit. We believe, however, that this price is good for the first several units."

Q. Mr. Mojonnier, those drawings referred to—I beg your pardon. Does the letter refer to any drawings or sketches or prints? I call your attention to Paragraph 4.

A. I believe that what went with this was two prints that were prints of sketches showing an idea we were developing into a machine for handling Zinpak paper cartons and I believe they are entitled S-601 and S-602, the "S" meaning sketch.

Q. Do those sketches disclose the invention?

A. I don't believe so. I believe they simply give the general outside appearance that the machine is going to have when it is developed.

710 Q. Do you have any prints, copies of those prints which were submitted with that letter?

A. I submitted those at the time of that December deposition. I am sure that they are available.

Q. Mr. Mojonnier, does this Plaintiff's Exhibit 37, which is a machine here in the court room, have a patent notice on it?

A. Yes, sir, it does.

Q. I wonder if you would be good enough to step down from the stand and read that notice to us.

A. It reads:

"The Mojonnier-Dawson Company" and our address. "MD Model WC-1, Serial No. 670. Manufactured under one or more of the following patents: 1,931,787; 1,687,707; 1,687,708; 1,725,562; 1,763,684; 1,763,685; 1,787,773; 1,869,090; 2,094,769; 2,101,570; 2,305,130; reissue 23,830. Other patents pending. Made in U. S. A."

Q. When was this machine manufactured?

A. This particular machine?

Q. Yes.

A. April, 1955.

711 Q. Does that same notice appear on the machines that were first manufactured?

A. You are saying back in 1948?

Q. Yes.

A. Except for the stamping in of the last patent reissue 23,830, the notice put on the 1948 machines was identical.

Q. Do the other patents listed relate to this invention?

A. No, sir, they do not.

Q. Do they relate to other machines in any way?

A. No, sir. They are other patents under which we are licensed.

By the Court: 2:00 o'clock, gentlemen.

(Whereupon at the hour of 12:30 o'clock p.m. Wednesday, May 25, 1955, a recess was taken until 2:00 o'clock p. m. of the same day.)

712 Chicago, Illinois,
Wednesday, May 25, 1955,
2:00 o'clock p. m.

Court convened pursuant to recess.

Present:

Mr. McCanna,
Mr. McKnight,
Mr. Pillote,
Mr. Allen,
Mr. Clement,
Mr. Voland,
Mr. Houghteling,
Mr. Bernat,
Mr. Kipnis,
And other Counsel.

713 And thereupon the following further proceedings were had herein:

By the Clerk: Case on trial.
By the Court: Proceed.

ALBERT B. MOJONNIER, called as a witness on behalf of the Plaintiff herein, having been previously duly sworn and examined, resumed the stand and testified further as follows:

Cross-Examination (Ctd.) by Mr. Clement.

Q. Mr. Mojonnier, this morning we referred to Defendants' Exhibit 25 for identification, which was the letter to the Page Milk Company. There were mentioned in that letter two prints which we didn't produce this morning. I have discovered that they have already been introduced, I believe, and I will show them to you. They are Defendants' Exhibits 15-A and 15-B.

I will ask you if you can identify those, and particularly as to whether those are the drawings, prints of which went to the Page Dairy Company?

A. I can identify them. I believe they were the
714 prints that went to Page Dairy Company because they were the only prints of this type in existence at

the time. They are preliminary sketches, showing in the case of S-602, a filler, closer, sealer, and in the case of S-601 a closer sealer which was in my mind at the time.

Q. Thank you.

Mr. Mojonnier, I believe we had just referred to the patent notice which appears on that machine, and I had asked you whether or not that same notice had been placed on the machines from their first production.

What was your answer to that question, sir?

A. I don't believe I answered it, but the fact is that that is a nameplate which we have used on all our machines, and I believe that a nameplate like that was put on the Bowman Dairy machine.

Q. And that nameplate listed eleven different patent numbers, did it?

A. I am not sure of the number, but it listed the same patent numbers that I read from it.

By Mr. Clement: I will ask the Reporter to mark 715 a book, which is a compilation of so-called copies of the patents listed in the patent notice, as Defendants' Exhibit No. 27 for identification.

(Thereupon said book was marked Defendants' Exhibit No. 27 for identification.)

By Mr. Clement:

Q. I hand you this Defendants' Exhibit 27 for identification, which includes these patent copies, copies of those patents listed in the notice on the machine, and I ask you again if there are any patents in that compilation or in that list which apply in any way to this machine upon which they appear, upon which the numbers appear.

A. Without checking through this to be sure they all match, it seems similar to the similar compilation that I have.

Q. When was that notice first placed on the machines?

A. What machines are you referring to, please?

Q. The machines incorporating the invention that we have in issue.

A. I believe that we placed that notice—that name-
716 plate, I call it—on machines right from the beginning.

Q. That would be from the Bowman machine on, is that correct?

A. I believe so. I am not sure, but I believe so.

Q. That would be April 12, 1948?

A. I believe that is right.

I didn't finish identifying this, sir.

Q. I am sorry.

A. But these patents are patents under which we are licensed referring to carton closing equipment and ice cream bar making equipment. I do not know that this is a complete list or not. I presume it is.

717 Q. When was your patent application on this machine filed, Mr. Mojonnier? I believe we said this morning April 4, 1949, is that correct?

A. I think that is correct.

Q. So that this notice was put on there prior to the filing of this application which matured into the patent in suit?

A. This nameplate was, yes, sir.

By the Court: Will you suspend a moment?

(Whereupon the trial of the above-entitled matter was suspended briefly while the Court attended to other matters. Whereupon the following proceedings were had:)

By the Court: You may proceed.

By Mr. Clement:

Q. Mr. Mojonnier, were there other patent applications pending in 1948, after you first put this notice on the machine, on the machine itself— at is, applications on the machine itself?

A. If I understand the term correctly, the term "pending" correctly, I had decided in my own mind to apply for a patent on this machine on the day we delivered it.

718 By Mr. Voland: Will you please speak up so we may hear you over here, Mr. Mojonnier?

By the Witness: I will try to.

By Mr. Clement:

Q. What is your interpretation of the word "pending" when it is in a patent notice, "patent pending" or "patent applied for"?

A. My understanding of the words "patent applied for" is that we have actually applied for a patent. My understanding of the words "patent pending" is that we have patent coverage in consideration or in process, possibly in application.

Q. What is your understanding of why you put patent numbers in a notice that is applied to a device?

A. That nameplate was prepared by us in 1946—

Q. Mr. Mojonnier, I asked you a question about what

your understanding was about the placing of numbers on devices, patent numbers on devices. You gave your—

A. My understanding is—

Q. Excuse me. You just gave your understanding of the words "patent pending" and "patent applied for." Now will you give your understanding of what placing patent numbers on a device is?

A. My understanding is that we have a right to place a nameplate, a general nameplate on our devices, 719 showing the patent or patents under which we are licensed to operate.

Q. Whether they apply to that device or not?

A. If any of the terms that are on the nameplate apply, I believe we have a right to put that nameplate on.

Q. But in this case, no terms applied in April of 1948?

A. Patents pending applied, sir.

Q. But you had no application on file?

A. No, sir, no application was yet in. But I had decided in my own mind to apply for a patent on the machine.

Q. When did you first get in touch with your attorney to prepare this application?

A. On or about April 17, 1948, directly after I completed the initial experiments at Bowman Dairy Company.

Q. When was it filed?

A. Didn't we say April 4, 1949?

Q. That was approximately a year later, is that right?

A. Yes, sir.

Q. It took that long to prepare this application on 720 this simple machine?

A. I wouldn't say that it took that long. I think it took that long for us to scrape the money together to pay the bill.

Q. How many machines were sold prior to April 4, 1949 with this form of notice on them?

A. I can't say exactly in number. I can give you the dollar value.

Q. Do you know the approximate number? Was it more than twenty?

A. You are asking me for a complete guess. As I mentioned the other day, I don't have an individual record of machines sold in that period, and I wouldn't give a guess without qualifying it. I would have to look at my books.

Q. Were there twenty machines sold in connection with the Zinpak machines?

A. I interpret "sale" to mean "shipment," and prior to April 4, 1949, there were not twenty Zinpak machines shipped, no, sir.

Q. How many machines were produced in 1948 for use with Zinpak machines?

A. For use with what?

Q. Zinpak machines. How many dispensing fillers
721 were produced for use with Zinpak machines in 1948?

A. Well, the Zinpak machine is a carton-making machine. You mean Zinpak filler closers, don't you?

Q. That is correct.

A. There were none produced in 1948. The first one was shipped in April, 1949.

Q. How many machines were produced for use in the aerosol industry in 1948?

A. I don't know exactly. A modest number, possibly.

Q. Ten, or more than ten?

A. Possibly fifteen or twenty.

Q. How many machines other than those that were produced for the Bowman Company were produced for use in filling milk cartons?

A. Milk cartons?

Q. Or the milk industry?

A. For filling whipping cream there were some produced. I would be completely guessing as to the number. There were quite a few. I would say maybe twenty or thirty. I don't know exactly.

By the Court: Will you suspend a moment?

(And thereupon the Court gave attention to another matter, after which the following further proceedings were had herein:)

722 Q. Mr. Mojonnier, then there were somewhat under 50 that were sold in 1948, approximately, from those figures?

A. There could have been. I was guessing. I don't know. I said I could give you the dollar value if you wished.

Q. What is the dollar value, Mr. Mojonnier?

A. Stated at the user's selling price, the sales of Mojonnier-Dawson Electromatic fillers in 1948, $19,825.45 and in 1949, one hundred—

Q. 1948 is sufficient for the purpose, at the moment.

A. Oh, I thought you wanted to get—

Q. Do you have the figure as to your price?

A. Yes, sir. The net, after jobbers' discounts and commissions, $8,837.10.

Q. Mr. Mojonnier, I call your attention to this unit marked 66 on the Plaintiff's Exhibit 39 which is one of the machines introduced in this case, which is standing in the court room.

I believe you testified that you had contributed to the design of that unit which is the timing mechanism on the machine, is that correct?

A. I contributed to the design of that particular 723 timer, yes, sir.

Q. Would you regard that as an inventive effort on your part?

A. I have not so regarded it. I have not applied for any patents on the circuit that is used in that particular timer.

Q. Do you sell that unit separately?

A. I don't believe we ever have. I don't know why we couldn't.

Q. Is there a patent notice on that unit?

A. There is a nameplate on that unit. It is part of the filler.

Q. And what is the character of that nameplate?

A. It is a reduced version of this larger nameplate that I read this morning. It is put there to get a serial number on the unit.

Q. It has the same patent numbers listed on it?

A. I believe it does.

Q. How long have you been putting that notice on that timer?

A. As nearly as I can recall now, we started that in 1952, or early 1953.

724 Q. Do you have any applications pending or applied for on that timer?

A. As such, no.

Q. Then there is no justification for putting that on, in the sense that you described earlier, or that if you had made up your mind to apply for a patent, you could put the wording "Patent pending", the term "Patent pending" on the device?

A. This timer was part of the filler on which the patent was applied for when we first—

Q. Where is that mounted during the normal use of this machine?

A. Right where you see it on the pedestal.

Q. Is it mounted on the wall in any installation?

A. The customer has the option of mounting it on the wall, if he wishes to do so.

Q. Do you know how many customers, roughly, mount it on the wall?

A. No, I have no knowledge of that.

Q. I believe that you testified earlier to the effect that approximately twenty Zinpak machines were sold to the Illinois Creamery Supply, is that correct?

A. I believe it is approximately 20, 20 or 22.

725 Q. What year were they sold in or produced?

A. The first one was shipped to Oakside Dairy in Woodstock, Illinois, in late April or May, 1949. The balance were shipped during the latter months of 1949, possibly the first month or two of 1950.

By Mr. Clement: Mr. McCanna, do you have available —yes, this is what I would like, it is an exhibit introduced in Mr. Mojonnier's December deposition.

I will ask the Reporter—

By Mr. McCanna: I believe there were two sheets to that, or at least a front and back.

By Mr. Clement: I see. Thank you. I will ask the Reporter to mark these for identification as Defendants' Exhibits 28 and 29.

(Thereupon said document was marked Defendants' Exhibits Nos. 28 and 29 for identification.)

By Mr. Clement:

Q. I hand these to you, Mr. Mojonnier. Will you 726 identify what Defendants' Exhibits 28 and 29 are?

A. These are photostats of the front and back of a one-page circular published by the Illinois Creamery Supply Company in October, I believe, 1948. It was for the dairy show in 1948, in any case.

Q. Is there a copyright notice at the bottom lefthand corner of that first sheet, Defendants' Exhibit 28?

A. It says, "Copyright, 1948, Illinois Creamery Supply Company." Or, it says, "ICS Company" to quote it exactly.

Q. Do you find another notice immediately to the right of that?

A. It says:

"Bottles and fillers covered by patents issued and pending."

Q. And what was this date?

A. October, 1948, I believe.

727 Q. Did you ever discuss the question of patent protection of the filler with anyone at Illinois Creamery Supply?

A. Mr. Rosen asked if we had a patent coverage underway and I told him we did.

Q. At what time was this?

A. Well, it would have been in the fall of 1948, because his first contact with me with reference to this machine was in late August or early September of 1948.

Q. Did you ever discuss the question of patent protection of the filler with Mr. Zinn?

A. I may have. I don't remember any specific meeting or discussion of that, but I probably did.

Q. Did the fillers which were incorporated in the so-called Zinpak machine have the same notice that we previously discussed and which you have identified as the nameplate attached to them?

A. Yes, sir. They had one of those nameplates on them.

By Mr. Clement: Do you have Plaintiff's Exhibit 62?

By Mr. McCanna: Here it is.

(Handing document to counsel.)

728 By Mr. Clement:

Q. Mr. Mojonnier, I hand you Plaintiff's Exhibit 62, previously introduced, which I believe is one of your circulars, that is, one of the Mojonnier-Dawson Company circulars, is that correct?

A. That is correct.

Q. I believe you previously testified to the fact that that was published in late 1953, is that correct?

A. I am not sure that I testified that way, but I think that is correct, yes, sir.

Q. It is correct?

A. I believe it is.

Q. I am sorry. I didn't hear you.

A. I believe that it is.

Q. Will you refer to some of the printed material in this on the third page of this folder and please read the second paragraph in the indented portion below the words in large caps, "FILLER", this second paragraph (indicating)?

A. (Reading):

"Uses the now famous Electromatic filling principle (patented) widely used in many industries."

729 Q. To what does that parentheses "patented" refer?

A. I believe this was printed up for distribution after this patent issued and that—

Q. You testified that it was published in late—

A. I believe that our advertising man—

Q. I beg your pardon.

A. I believe that our advertising man included that statement in there.

Q. I am not quite clear now. I believe you testified earlier that this was published in late 1953, is that correct?

A. Did I testify to that?

Q. I will read the testimony at page 599 of the record. Mr. McCanna handed you that circular and said:

"I hand you a circular and ask whether this illustrates the Electromatic fillers you are now telling about?"

And your answer was:

"This is the circular which was published late in 1953 and illustrates the various models which we sold at that time. There are additional models today."

730 A. Well, I can say that the inside page of this was prepared for the 1953 dairy industries' catalog which is published around the end of the year or at the beginning of the following year.

I know that the 1954 catalog came in about February or March of this year, to my office, and then it was reprinted with the back part, with the specifications on it, and I know that I prepared it in late 1953.

I would have to check my records to see exactly when this went to the trade. I believe that the first mailing was in late March or early March of 1954.

731 Q. Are these nameplates that we have been talking about the only notices that the trade has been given with respect to your original patent in suit or the reissue patent?

A. There was a notice of this suit sent to the trade.

Q. How many of those were sent?

A. We included those notices in the same general mailing that I have spoken about. The mailing was made by the Olson Publishing Company in Milwaukee, Wisconsin. It included this circular, some other advertising literature, and the notice that there was a patent suit.

Q. And how many of those were sent?

A. I don't know of my own knowledge the exact number but I am informed that Olson's list totals about eighteen or nineteen thousand at this time. It is one to each dairy in the country.

Q. So far as your knowledge is concerned, you believe that it was the practice of that organization to send one of those notices to every dairy in the country, is that right?

A. I can't say that that is right. I know that when we—

732 Q. I thought that is what you just said, Mr. Mojonnier. I am sorry.

A. No, sir. They make our general mailings at all times. They have a set of addressograph plates working on a general mailing list. When we have advertising to send out, we have them make the mailing. We had a mailing going out and we included a notice stating there was a patent suit in this mailing.

By Mr. Clement: I will ask the Reporter to mark for identification a letter on the letterhead of Mojonnier-Dawson Company dated February 20, 1954, as Defendants' Exhibit 30 and a second notice in printed form, Defendants' Exhibit 31 for identification.

(Thereupon said documents were marked Defendants' Exhibits Nos. 30 and 31, respectively, for identification.)

By Mr. Clement:

Q. Mr. Mojonnier, I hand you these two exhibits, Defendants' Exhibits 30 and 31 and ask you if those are the notices which were sent out.

733 A. Yes, sir. The notice on our letterhead was sent to our jobbers and the printed notice is the one I have been referring to that was included in this late March or April mailing.

Q. The one which was sent to your jobbers is which?

A. The one on Mojonnier-Dawson letterhead.

Q. And that is exhibit number what?

A. 30.

Q. How many of those went out, Mr. Mojonnier?

A. One to each of the active jobbers that handled our line, possibly 30 or 40. I don't have the exact numbers of those jobbers with me.

Q. These all went out after the patent issued is that correct?

A. Yes, sir, that is correct.

Q. Were there any notices given before the patent issued?

A. None, sir.

Q. Not even orally?

A. No, sir.

Q. Were there any notices repeated, that is, in the sense of following up these letters or circulars?

734 A. I found and gave to you the other day two registry receipts indicating that we sent two notices by registered mail to two different dairies. I don't recall the circumstances of mailing those. I assume that someone said the dairy had not gotten a notice and would we please send them one. Those are the only instances I have been able to find.

735 Q. Mr. Mojonnier, are you acquainted with a Mr. Tosun of the Willow Brook Dairy at Waterbury, Connecticut?

A. I know who Mr. Tosun is.

Q. Did you ever send him a letter in connection with this notice of infringement in addition to the two that we have identified as having gone out in a general mailing?

A. I might have. I don't know for sure.

Q. Mr. Mojonnier, when did you decide to apply for this reissue of the original patent which is in suit?

A. In my own mind, I decided the minute I read the original patent because the patent didn't cover the invention as I conceived it.

Q. When was that?

A. I don't know the exact date, but it was shortly after the patent issued, a matter of a few days after, I believe it is, after February 2, 1947.

Q. And what did you determine was wrong with the patent as it had issued?

A. I realized that I hadn't gotten across to my attorney the basic meaning of the new principle or that it hadn't gotten into his mind, a complete conception of the
736 seven elements which combined to make a unique structure.

Q. Was this after you had seen the accused machine?

A. Yes. I saw the first machine similar to the one that is called the accused machine in January of 1954.

737 Q. Did you feel that the original patent covered the accused machine?

A. Oh, yes, sir.

Q. In spite of the error that you now indicate was in the original patent?

A. I felt that Claim 1 of the original patent read on the accused machine.

Q. Mr. Mojonnier, do you recall the first claim that was submitted with the reissue petition—claim 6, I believe it was.

To refresh your recollection, I will hand you a copy—

I will first ask the Reporter to mark this copy for identification Defendants' Exhibit 32.

(Thereupon said document was marked Defendants' Exhibit No. 32 for identification.)

By Mr. Clement: Mr. McCanna, do you have a copy of the file history of the reissue patent here?

By Mr. McCanna: No, I haven't.

By Mr. Clement: I believe the certified copy is in the
738 Court file, your Honor. It is in a heavy binder of the top folding form. I had two volumes. One was the file history of the original patent, and the other the file history of the reissue patent. Both were in heavy black bindings.

By the Court: I think I saw them, but they don't seem to be on my desk, and they haven't been there for several days.

By Mr. Kipnis: Mr. Fuller indicated that he might have them.

By the Court: I think he did get them.

By Mr. Clement:

Q. While we are waiting for those to arrive, Mr. Mojonnier, I will hand you this document, which I have marked Defendants' Exhibit 32 for identification, and will explain to you that in the absence of this file history that this is a copy of claim 6 as it was submitted to the Patent Office with the reissue petition. I believe you recall we discussed this with Mr. Fishleigh the other day.

I want to explain to you also that the portion of the claim which is underlined is that which was added
739 to make the new claim 6 submitted with the reissue application. The portion which is stricken and also in parentheses is the portion which was deleted from the original claim 1 of the patent as it originally issued.

Now, Mr. Mojonnier, is the error which was claimed in your reissue petition illustrated by the language which is stricken from this original claim 1, namely, that which is crossed out and in parentheses in this claim 6?

A. I will answer that this way: I signed this application, but I was not even then completely satisfied with the language of this claim. I then went down to Wash-

ington with Mr. McCanna, and I helped him write the claims which are now Claims 6 and 7 of the reissue patent.

Q. Well, does that answer my question as to whether you regard this language which is stricken from original claim 1 as containing the error which was alleged in your petition for reissue?

A. Well, I believe that this claim is an improvement over the previous language and comes closer to expressing the true meaning of the patent. But we went on 740 from here to the final claims.

Q. I will ask again, Mr. Mojonnier, does the language which was stricken in the original claim 1 represent the error which was alleged in the petition filed in the Patent Office for purposes of obtaining the reissue?

By Mr. McCanna: Your Honor, this witness is not qualified as a patent expert. I think if he were asked about the machine or the invention or that kind of thing, he could well explain it. I think we all know that inventors are not supposed to have the lexicology of the attorney, although in this case I will admit that I fumbled it too, and Mr. Mojonnier helped me as he testified.

By the Court. I think I will sustain the objection.

By Mr. Clement: Here are the copies of the file histories of the original patent and reissue patent, your Honor.

741 By Mr. Clement:

Q. Mr. Mojonnier, I am now referring to your oath in the reissue application. Apparently we don't have a copy for you to examine, so I will read a portion of that oath to you, and you can tell me if you recall making this statement in the oath:

"Deponent believes that claims of the scope of the present claims 6, 7 and 8 are essential adequately to protect the invention which the deponent is entitled to claim, which should be claimed, and which prior to February, 1954 deponent always supposed to have been adequately claimed."

Earlier in your same oath, Mr. Mojonnier, you say:

"Deponent further states that errors which rendered said Letters Patent so inoperative arose through error without any deceptive intention on his part, and that the following is a true specification of the errors relied upon; to-wit, the failure to present claims of adequate scope such as claims 6, 7 and 8; that such errors particularly specified arose as follows—"

742 Then you give a dissertation on how the error arose. Do you recall placing that in that oath, Mr. Mojonnier?

A. That was prepared by my attorney and I signed it.

Q. You recall signing the oath?

A. Yes, I do.

Q. Do you recall the further statement:

"Deponent further states that he verily believes that the aforesaid Letters Patent No. 2,667,990 referred to in the foregoing petition and specification and herewith offered for surrender are inoperative for the reason that the specification thereof is defective and insufficient, and that the defect and insufficiency consists particularly in the failure fully and adequately to claim the invention, that is, by claims of adequate scope such as claims 6, 7 and 8 now presented."

Do you recall making that statement, signing the oath which contained that statement, Mr. Mojonnier?

A. Yes, sir.

743 By Mr. McCanna: If your Honor please, I believe that most reissue applications are reissued because of some inadvertence. I hardly believe that the Patent Office having accepted this, and the witness having verified it, that this kind of examination is—

By the Court: Do you object to the question whether he recalls making that affidavit?

By Mr. McCanna: I am not objecting to that, just to the possible further examination along this line.

By Mr. Clement: If the Court please, this witness has testified that he believes that the accused machine was within the scope of Claim 1 of the original patent. Now he has filed a reissue petition which indicates that those original claims, particularly Claim 1, were of such limited scope that it made the patent inoperative, partially inoperative or invalid.

By Mr. Clement:

Q. Mr. Mojonnier, when you say Claim 1 does cover the accused machine, do you feel that all the elements that are called for in Claim 1 are present in the accused machine?

744 A. Yes, sir, I do.

Q. As defined in Claim 1?

A. Yes, sir, or the mechanical equivalent thereof.

Q. Can you identify what is the mechanical equivalent in the accused machine of language in Claim 1?

By Mr. McCanna: Your Honor, it seems to me that again this witness is not a patent expert. He has told that he believes, so far as his knowledge of the claims is concerned, that it is there in that machine.

By the Court: I am inclined to sustain that objection.

By Mr. Clement:

Q. Mr. Mojonnier, I think in your direct testimony the other lay, you indicated that Mr. Brasile had presented to you the idea of opening the Pure-Pak, preformed and preset ed Pure-Pak carton, in order that it could be filled and then resealed, is that correct?

A. Well, he brought me a carton and asked if I could find out some way of opening it, filling it, and reclosing it.

Q. But he did present to you the idea of taking a sealed carton, a Pure-Pak carton, and opening it for filling purposes?

745 A. Yes. May I say this, that it is not sealed before it is filled. It is temporarily closed and then is opened, filled, and reclosed.

746 Q. It is sealed sufficiently to satisfy Public Health requirements, is that right?

A. It is closed sufficiently to satisfy Public Health requirements.

Q. You referred also to a contract dated December 29, 1951, which was introduced in evidence as Plaintiff's Exhibit 58, the contract being between the Mojonnier-Dawson Company and Mr. Polivka and Mr. Brasile.

Do you recall that contract?

A. Certainly, yes, sir.

Q. In that contract, in the second paragraph on the first page, it states:

"Whereas the purchasers have suggested to the seller—"

Who are the purchasers?

A. Brasile and Polivka.

Q. "Purchasers have suggested to the seller—" Who is the seller?

A. Mojonnier-Dawson Company.

Q. (Reading):

"that the seller manufacture a filling machine, hereinafter referred to as filler, to fill preformed Pure-Pak
747 paper bottles with milk or other similar dairy products."

Do you recall that statement?

A. The statement is in the contract, yes.

Q. Is that statement a true representation of how this arose, this relationship?

A. Well, I have testified as to how it arose. Mr. Brasile brought in this carton, and I made a machine, he inspected it, approved it, and then asked for the exclusive sale of that machine.

Q. Mr. Mojonnier, at that particular time, which was December of 1951, how many fillers which you had manufactured or Mojonnier-Dawson had manufactured were being used to fill American Can cartons? This is December of 1951.

A. I can give you the exact number, if I may have a moment.

It appears that there were exactly one hundred.

Q. One hundred of your fillers in use?

A. Yes, sir. There were 56—I beg your pardon—there were 20 Model DA's—yes, that checks—and 80 Model CA's.

Q. And these were used to fill American Can paper 748 cartons?

A. Yes, sir.

Q. Mr. Mojonnier, in your direct testimony at page 218 of the record, it is indicated that you said that:

"Very shortly after that, in fact immediately after the collapse of the Zinpak program, Mrs. Mojonnier and I went to the offices of the American Can Company in Chicago and persuaded them to sell paper cartons to small dairies who would use our filler."

Do you recall that testimony?

A. Yes, sir.

Q. You then went on to say:

"They previously had not wanted to sell cartons to small dairies because they could not, economically, tie up one of these large, expensive machines of theirs for the sale of a few cartons a day."

Do you recall that?

A. Yes, sir. That is a fact.

Q. How did American Can Company make arrange- 749 ments for the sale of its cartons? By that I mean to whom were they being sold prior to the time you went to them and asked them to release cartons to these small dairies?

A. They were being sold to dairies all over the country. They were not being sold to small dairies for the reason I stated: That American Can could not see tying up the

capital involved in one of their large machines for the sale of a few cartons per day. You see, they rented those machines.

Q. Well, who would make the cartons? Would a maker of cartons use the machine to make the cartons and sell them to the dairy?

A. No, sir. American Can Company makes the cartons themselves in central plants that they have in areas all over the country.

Q. Well, at that time, did they have any restriction on the number that had to be bought or purchased by any individual buyer?

A. No formal restriction, but they surveyed each customer, and if they thought that the quantity per month would be sufficient to justify their setting a machine in there, then they would take him on. If not, they would
750 tell him they were sorry, that they just couldn't handle him; he was too small.

751 Q. Do you know if it was their practice not to sell to any customer who would buy less than a carload lot at any time?

A. I believe their price list shows prices clear down to 5,000, though I believe they liked to sell carload lots, and I believe that even small dairies buy in carload lots.

Q. Is it economically feasible for a small dairy to buy a carload lot?

A. Yes. Carload costs around $2,000. If he has the $2,000 he can save enough money on a carload to make it a good arrangement.

Q. Can he store those cartons conveniently?

A. If he has that much room. Many do.

Q. Is there any deterioration which is likely to occur in storage?

A. After a long period of time, but not over short periods.

Q. Was there any trouble at that time with so-called leakers in the American Can carton?

A. Well, I have been around the paper bottle business a good bit of my life, and as long as you have paper cartons, you are going to have leakers. That is the only way I can answer that. Leakers are something we fight
752 and lick.

Q. Does heat affect these cartons adversely?

A. Excessive heat does.

Q. Do stored cartons ever stick together after being stored any period of time when the temperature has risen?

A. If they are stored improperly. They shouldn't be stored that way.

Q. At this time that we are speaking of, December, 1951, what was the policy of the Pure-Pak Company in selling cartons, if you know?

A. I can't say that I know of my own knowledge, but my understanding is that they would sell to any dairy who could afford one of their machines.

Q. Was anyone using Pure-Pak cartons at that time in the sense of closing them and then opening them and filling them?

A. No, sir. That was a new idea at that time.

Q. As soon as Pure-Pak cartons were combined with your machine, in the sense that we have discussed it, what effect did that have on American Can Company, if you know, on the sales of American Can to small dairies?

A. Based on my records, it increased them.

753 Q. Why did it increase them?

A. I can't say that I have any direct knowledge of that. I suspect that the continual prodding of Mojonnier-Dawson in the industry, the preaching of the need of the small dairy, helped to get everybody into the act. After all, we pioneered this thing.

Q. If a great many small dairies started using Pure-Pak cartons, which I understand is the case—is that correct?—after this mechanism was developed of yours combined with the preformed Pure-Pak carton, there were quite a number of small dairies that started using them, were there not?

A. There has been a gradual and very satisfying growth of the use of preformed Pure-Pak cartons since that day, yes. 103 people, for instance, adopted that carton with our machine during 1952.

Q. Has there been a comparable increase in the use of American Can cartons by the small dairies?

A. I would say there has been. Not all on our machine, but there have been a lot of other machines for small dairies come in.

Q. Are these two cartons in competition with each other?

A. Certainly.

754 Q. Mr. Mojonnier, at our last session, we mentioned your figures as to sales and employees, I believe.

A. Employees?

Q. The number of employees and sales. I think you said at that time that you would be able to check your records and correct any figures that you had given which were erroneous from just your recollection.

Do you have those figures with you today?

A. Yes, sir. I have figures starting in 1948 and ending in 1955. I have the number of employees on the payroll at the pay period nearest the 15th of each month, as shown on our report to the State and Federal Governments for unemployment compensation.

755 Q. Can you give me the number of employees consecutively now from 1948 through, well, to the present time, per year?

By Mr. McCanna: If your Honor please, I have been at a loss to know where the number of employees each year that the plaintiff had is relevant and material to anything. Beyond that, there has been a subpoena issued to the plaintiff to produce its weekly wage reports, of how much it paid each workman, each week, and all such details as that. Where does that enter into this case? I don't see it. I am perfectly willing to have the witness answer this question because he made a guess on it at the first occasion, but I don't see where we are headed, what we are headed for.

By Mr. Voland: No such subpoena as has been described, your Honor, has been served. The subpoena called for the forms 91-TA that you file with the Federal government, the quarterly report of wages taxable, merely 756 for the purpose of showing the number of employees.

We haven't called for any information as to salaries and wages—just the number of employees.

By Mr. McCanna: Let me read the subpoena. Maybe I am mistaken.

By the Court: Well, what is the significance of this question?

By Mr. Clement: If the Court please, what I am leading up to obviously is that I want to tie into the number of employees the question of commercial success. I want to show the increased size of the company.

By the Court: Very well. Proceed.

By Mr. Clement:

Q. Would you give us those figures, Mr. Mojonnier?

A. Is it all right if I give the high figure, the low figure

and the average figure for each year, to save time, or I can give you each month, either way.

Q. The first mentioned will be fine.

757 A. Very well.

In 1948, the highest number on the payroll was 33; the lowest was 19; the average was 26.

In 1949, the highest was 60; the lowest was 26; the average was 46.

In 1950, the highest was 48; the lowest was 21; the average was 32.

In 1951, the highest was 30; the lowest was 13; the average was 20.

In 1952, the highest was 30; the lowest was 15; the average was 25.

In 1953, the highest was 51; the lowest was 34; the average was 43.

In 1954, the highest was 62; the lowest was 41; the average was 50.

So far in 1955, the highest is 44; the lowest is 42; and the average is 43.

Q. Now, Mr. Mojonnier, did you have anything to add to the sales figures that you gave us the other day?

A. Well, I have totaled from our sales journals—

Q. Are these for your prices?

A. I have them both ways, sir.

Q. Will you give us your price, sir?

758 A. Our net selling price after jobbers' discounts and commissions?

Q. That is right, yes, please, starting with 1948.

A. This is just fillers or all sales?

Q. Just fillers.

A. Yes, we separate them out in our books, you know.

759 Q. Yes.

A. In 1948, stated at our net price to the jobber, filler sales—now let me be sure I am not misunderstood. We set these up in our books as filler machines, and that filler machine may include some stapler units. I have also some figures where I have separated out the stapler units, so that I can give you the net on the filler machines only, just the patented part. I will give you first the filler machines as they show on our books.

In 1948, $8,837.10.

1949, $147,469.62.

1950, $166,750.99.

1951, $92,739.19.
1952, $307,962.74.
1953, $611,645.41.
1954, $982,026.45.
1955, to April 30, $265,581.09.
The total to the end of April, 1955 is $415,796.90.
The total from April 12, 1948 to April 30, 1955, is $2,583,012.59.

Q. Mr. Mojonnier, to what do you attribute the rather large increase in 1952 over what had taken place previously?

760 A. The reason for the low sales in 1951, Mr. Clement, was that that was the year of the Korean War, and our aerosol business collapsed to practically nothing. There were no cans available.

In 1952 not only did our American Can business pick up, and not only did our aerosol business pick up very sharply, but also we had a nice volume of fillers for Preformed Carton Corporation for Pure-Pak. I have testified to the number of those fillers, I believe.

Q. What amount of the filler sales in 1952 were Pure Pak fillers, roughly? One third or two-thirds?

A. Just a minute—

By Mr. McCanna: If your Honor please, I don't know what difference this makes. The witness, I am sure, is willing to answer questions as to his business, but just what difference would it make whether they sold some of these fillers for use on American Can cartons or Pure-Pak or Seal King or Zinpak or something else?

We gave a general dollars figure which we feel represented the gross business.

By Mr. Clement: If the Court please,—excuse
761 me.

By Mr. McCanna: Is there any defense involving that or what is the purpose of this?

By Mr. Clement: If the Court please, this again goes to commercial success. We, of course, are attempting to show that the idea of using these Pure-Pak cartons contributed much more to his commercial success than the patent itself, the device of the patent—

By the Court: Go ahead. Overruled.

By the Witness: I have testified that 103 fillers for Pure-Pak were sold in 1952. They sold at around $1200 apiece. So that would be, roughly, $120,000 out of $372,000, or possibly a third for Pure-Pak.

By Mr. Clement:

Q. How many were American Can?

A. There were 83 American Can fillers sold that year. There were 38 aerosol fillers sold that year.

Q. In 1952?

A. Yes, sir, a total of 224.

Q. And 1953?

A. I think I gave you those figures the other day, but I don't mind repeating them.

762 In 1953 we sold 131 fillers for American Can. We sold 329 fillers for Pure-Pak. We sold 19 aerosol fillers for a total of 479.

Q. In 1954?

A. In 1954 we sold 79 fillers for Canco, 359 fillers for Pure-Pak, 8 fillers for Seal King, which was introduced in November, one filler for Ilreco cartons, one filler for Canadian carton, and 23 aerosol fillers, for a total of 470.

763 Q. And in 1955?

A. In 1955, from January 1st through April 30th, we sold 19 fillers for Canco, 67 fillers for Pure-Pak, the majority of which were our newer automatic machines, 17 fillers for Seal King, 2 fillers for Ilreco, 3 fillers for Purga, 5 fillers for other containers and 8 aerosol fillers, a total of 116.

Q. Mr. Mojonnier, I believe you testified that when this contract was entered into in 1951, there was $25,000.00 put up by the other parties to the contract, other than Mojonnier-Dawson, is that correct?

A. There was $25,000.00 put up by Mr. Polivka on behalf of Mr. Polivka and Mr. Brasile.

Q. I believe you stated that you had to do some tooling up for this production for this filler, is that correct?

A. There was a small amount of tooling to be done. The deposit was used for buying inventory and incurring labor to get the program started.

Q. That is, the $25,000.00 was used to get inventory to make these fillers?

A. Yes, sir, to set up a line for making this particular model.

764 Q. What was involved in this particular model that was not involved in those you had been making?

A. A new nozzle and the opening and closing equipment.

Q. Well, that was a relatively small portion of the machine, is that correct?

A. Well, the machine sells today, the Model CP that you are looking at, for about—well, for exactly $1445.00 and of that, the hydraulic equipment plus the openers, sells for $505.00 or about one-third.

Q. The opening claw was one of the things you had to add to the machine, is that correct?

A. That is right.

Q. The claw for opening the carton?

A. That is right, for that particular item there was a little tooling bought, a dia—

Q. A die?

A. It was a diacro notcher, I believe is what you call it.

Q. So, in effect, the amount of money that needed to be expended to make additional parts was not very great, 765 is that correct?

A. No, that is not true. They wanted 25 machines in a hurry and we had to go out and buy material and incur labor to make those machines.

Q. I meant in the sense of tooling up.

A. The actual tooling itself was not a large item.

Q. How large?

A. I have no figure that will tell me how large—a few thousand dollars.

Q. A few thousand dollars?

A. That would be considered small in our business.

By Mr. Clement: That closes our cross examination, your Honor.

Excuse me, Mr. Kipnis has some questions.

By Mr. Kipnis: I just have a couple of questions, your Honor.

766 *Cross-Examination by Mr. Kipnis.*

By Mr. McCanna: I assume Mr. Kipnis is questioning for Mr. Lewis and U. S. Filler and those defendants, is that it?

By Mr. Kipnis: That happens to be correct, but I suppose any evidence that is in the case is available to all of the defendants?

By the Court: Yes.

By Mr. Kipnis:

Q. Mr. Mojonnier, I believe you testified you had a meeting with Mr. Lewis on June 24, 1953, is that correct?

A. Yes, that is correct.

Q. And at the conclusion of the meeting, did you give Mr. Lewis some sort of document that you signed?

A. Yes, sir.

Q. And did you keep a copy of it?

A. Yes, sir.

Q. Do you have it here in court?

A. No, sir, I don't.

Q. Could you produce it?

A. I could produce it, yes. I don't have it with me.

Q. We would like to have that document produced.

767 By Mr. Kipnis: We would like to have the document produced, since the witness referred to it.

By Mr. Kipnis:

Q. Now the object of that meeting with Mr. Lewis was to arrange to have the plaintiff, that is, the Mojonnier-Dawson Company, continue to ship machines to U. S. Filler Equipment, Incorporated, is that right? Was that the purpose of the meeting?

A. Well, eventually Mr. Lewis came in to—after having been introduced by telephone by Mr. Brasile,—to discuss any matters connected with the rather unhappy situation that we were in at that time.

Q. Were you claiming that some money was due you from U. S. Filler Equipment, Incorporated?

A. No, not—oops; we were not selling to U. S. Filler Equipment. We were selling to the Preformed Carton Company.

Q. And you were claiming—

A. They were all the same management and Preformed Carton owed us something in excess of $60,000, on which payment had been promised quite frequently, by Mr. Brasile in June, payment in full.

Q. Mr. Lewis was there to try to arrange to have
768 you continue to ship machines, is that right?

A. That may have been what he had in mind. I don't know what was in his mind.

Q. Well, the upshot of the conference was that you did agree to ship the machines under an arrangement with the U. S. Filler Equipment, Inc.?

A. We had a proposal which, had it been kept, that would have been the result. The proposal was conditioned upon certain things being done.

Q. In that proposal, it was agreed that you would ship

machines direct to the customers of U. S. Filler Equipment, Inc., is that correct?

A. We would continue to bill to Preformed Carton and ship as directed by U. S. Filler just as we had been doing for some time.

Q. After you had handed that proposal to Mr. Lewis, you did ship to customers of U. S. Filler, Inc., direct, is that correct?

A. For a few days we did, yes, sir.

By Mr. Kipnis: That's all.

By the Court: Any redirect examination?

By Mr. McCanna: I have no redirect examination, your Honor. Could I have a few minutes for a recess?

769 By the Court: Yes, take a short recess.

(Witness excused.)

(Whereupon a short recess was had, after which the following further proceedings were had:)

770 By the Court: Proceed.

By Mr. McCanna: I will call Richard Farrell.

RICHARD L. FARRELL, called as a witness on behalf of the Plaintiff herein, having been first duly sworn, was examined and testified as follows:

Direct Examination by Mr. McCanna.

Q. What is your full name?

A. Richard L. Farrell, F-a-r-r-e-l-l.

Q. Your residence?

A. 4864 Magnolia, Chicago.

By Mr. Voland: Mr. Farrell, will you please raise your voice so that we may all hear you over here?

By the Witness: Yes.

By Mr. Voland: Thank you.

By Mr. McCanna:

Q. Will you please state your occupation?

A. I am commodity manager for the American Can Company, with responsibility for the sale of fiber milk

771 containers.

Q. Are you here in response to a subpoena?

A. Yes, I am.

Q. And you say that American Can Company is responsible for the sale of fiber containers?

A. Yes, sir.

Q. Will you tell us briefly what is the business of American Can Company?

A. We are container manufacturers, both of metal and of fiber containers. Our fiber milk container end of our business is rather a substantial one, approximately ten per cent of our sales volume.

Q. Now are these fiber containers that you mentioned in any way similar to the terms we have been using here, such as paper cartons?

A. Yes, that is correct. The terms "fiber milk container" as used in our organization, for our own use, is known in the trade as a paper milk bottle or paper container, paper milk bottle.

Q. They are all the same?

A. All identical, that is right.

Q. In your sales capacity, what products of American Can do you handle?

A. Fiber milk containers only.

772 Q. How long have you been employed by American Can in these sales?

A. About eleven years.

Q. What territory do you cover in your sales work as applied to the central division of American Can Company?

A. Well, the central division of American Can Company extends, roughly, from Canada to the Gulf and goes almost to the Rockies in the West and to the Appalachians in the East. Approximately 40 per cent of our sales volume is in the central division.

Q. You mean of the entire sales volume of American Can?

A. That's correct.

Q. And you are now talking about the paper milk cartons?

A. I couldn't give you a percentage figure there. I am sorry.

Q. Roughly, about what is the volume per year of those paper milk cartons involved?

A. We do a little bit better than sixty million dollars annually on paper milk containers.

Q. And I believe you said something a minute ago
773 that those sales represent about 10 per cent of the American Can Company's total in gross business?

A. That is correct.

By the Court: What is the average sale price per carton?

By the Witness: Seventeen dollars and ninety-eight cents per thousand on quarts.

By the Court: Seventeen what? Cents?

By the Witness: Ninety-eight, sir.

By Mr. McCanna:

Q. And who—

By the Court: Tell me that again.

By the Witness: Seventeen dollars and ninety-eight cents per thousand quarts.

By the Court: Go ahead.

By Mr. McCanna:

Q. Who manufactures these paper cartons that you sell?

A. We produce, in our own plants, the carton itself. It is entirely preformed and set up for use by the dairy. It is not a dairy manufactured package.

Q. Will you please explain that in—

774 A. Well, as—

Q. (Continuing.) —in detail, when you say "we manufacture or produce"?

A. Our competitor, the Ex-Cell-O Corporation lease equipment to dairies, these machines to dairies for preforming, or rather, I should say the forming of a blank within the dairy.

The dairy produces their own package, puts the wax on it and puts the wire staple in it.

We preform the package to the extent that the filler, the only operation which is concerned, is the lifting of the plug, the filling of the container and the resealing of the package.

775 By the Court: Your price is very nearly three cents per quart per carton, is that correct?

By the Witness: That is correct.

By the Court: What is the price per quart of milk in Chicago, not that it has anything to do with the case but—

By the Witness: Well, you can buy it for different prices but I would guess at about 21, 21 or 22 cents. It goes up. It fluctuates by the price of milk.

By Mr. McCanna:

Q. These machines that make the cartons, you started to tell something about the way American Can does it, against the way that someone else does it.

A. We feel our operation is considerably more simple than the other type of operation in that it takes a dairy out of the category of a carton manufacturer and also the responsibility for the purchase of raw materials, the wax, the wire, the staples, is a responsibility of the dairy when they form their own, as against our complete responsibility when we send them a preformed package.

We feel that that gives them the opportunity of spending their best efforts in the processing of milk rather than in the actual fabrication of the container.

776 Q. Who makes the machines for making these cartons?

A. Our packages?

Q. Yes.

A. We produce fillers of our own manufacture. There are also fillers produced by Mr. Mojonnier, by the Triangle Package Machinery Company, the Cherry-Burrell Company.

Q. I believe perhaps you misunderstood my question. I mean the machines which actually manufacture the cartons, the mechanical cartons.

A. We produce our own can making equipment and carton making equipment.

Q. What do you call those machines?

A. We would call it a can line, primarily due to the hold over from our tin can business. It is a can line, though a fiber milk carton to us is a can in itself. We refer to it as a can line.

Q. Are those machines sometimes called Canco machines?

A. It could possibly be referred to as that.

Q. Now tell us something briefly about the sizes or capacities of these machines for making the cartons that you are now supplying for the trade.

777 A. We now produce two milk fillers for use in the dairy, one that operates at about 45 quarts per minute and the other operation at approximately 120 quarts per minute.

Q. And what are those machines selling for?

A. Well, the sale price on the smaller machine is about $22,000 and on the larger one about thirty-four.

Q. $34,000?

A. Thousand dollars, yes, sir.

Q. And for how long a period has American Can been

supplying the paper milk cartons to the dairy trade, would you say?

A. Approximately twenty years. We started in 1935 back in New Jersey with some experiments and later into Long Island.

Q. And by supplying, I suppose you are referring to the machines, these large machines that you make?

A. That is correct.

Q. And they produce the—

A. They open and fill and reseal the package.

778 Q. Now to what type of dairy plants are these Canco machines sold?

A. Well, normally to medium and larger sized dairy operations because they can justify the expense of that type of money.

Q. Are these Canco machines suitable for the small and moderate sized dairy plants?

A. They wouldn't be economical at all.

Q. You mean by economical—would you explain that, please?

A. Well, assuming that you spent twenty-two or twenty-three thousand dollars for a machine and had requirements of maybe 500 or 1,000 quarts a day, obviously, by dividing that number by the cost of the machine, you would run the package cost up considerably.

Q. Now, do you know whether there was a demand for a low priced paper carton filler for small dairy plants prior to, say, 1948, 1949 or 1950?

A. Well, there has, I think, always been a demand for a small filler by small dairy people to meet the competition of larger and, shall we say, more merchandise-minded dairies who saw their future in the wholesale end of the business rather than in the delivery of the milk to the

779 home. That demand, I think, was an ever growing demand and it is only in recent years that it has been met, in my opinion.

Q. Have you had any personal experience with small dairy plant owners with respect to the need of a low priced filler for paper cartons?

A. Yes, very much. As a matter of fact, it has been a problem of ours for some little period of time until other equipment manufacturers found themselves in a position to supply that demand.

We have always liked—we would have always liked to have been in a position to supply those people, but, restric-

tions on raw materials made it so that we did not have sufficient equipment of our own to supply to all of the trade. We were very much limited. Consequently, there was a demand for the package that couldn't be met because there was no filler with which to fill the package.

Q. Have you had any personal experience with small dairy plant owners calling at your office on this subject?

A. Yes, I have.

Q. Will you tell us something about that, please?

A. Until there was a machine available, why, it
780 was, personally at least, a little bit of a problem to see as many people sometimes as wanted containers where there wasn't any equipment available for them to fill the container and I think the competitive aspects made it necessary for these smaller dairy operators to find some source of supply.

There was never at any time—I shouldn't say "never at any time," but, for practical purposes, we have had package capacity to supply the trade and very much have desired to do so, and, as a matter of fact, we do now enjoy considerable small dairy business which we find profitable to handle.

Q. Do you know whether there was available on the market prior to 1948 any milk filler for paper cartons satisfactory for the small dairy plants?

A. The only fillers available were those that we produced ourselves.

Q. Are you acquainted with Albert B. Mojonnier?

A. Yes, sir. Yes, I know Mr. Mojonnier and Mrs. Mojonnier.

Q. Do you recall your first contact with Mr. Mojonnier in connection with the paper filler—with a filler for paper cartons?

A. Yes. As a matter of fact, I do. If I remember
781 correctly, Mr. Mojonnier called and made an appointment to come to our offices to discuss the paper milk situation and advised me of the fact that he did have a filler which he felt was satisfactory for the small dairies.

We arranged a meeting and, as a matter of fact, we had Mr. Shuttleworth, who at that time was in our New York office, responsible for the sale of the fiber milk container, also present at that meeting.

782 Q. Do you recall the time of that meeting, approximately?

A. The time was somewhere in the spring of 1950. I can't recall the exact date.

Q. Do you recall what Mr. Mojonnier said at that meeting, in general?

A. Well, he more or less gave us a little bit of a run down on his experience with the—I think they call it the Zinpak containers. Such container, as far as I know, was never satisfactory.

He went on to explain that he had a piece of equipment which was satisfactory for filling our package and that it would sell in the neighborhood of, I think, one thousand or eleven or twelve hundred dollars.

Very honestly, I was somewhat skeptical that a piece of equipment satisfactory for filling containers could be produced at that price.

Q. Are you familiar with the Electromatic filler made by the Mojonnier-Dawson Company?

A. Yes, sir.

Q. Do you know what effect the Electromatic filler had on this need for filling paper cartons in small dairy plants?

783 A. Well, it was very quickly successful. I know that we have picked up, I would suspect, without having any figures to substantiate it, probably 125 or 130 small dairy accounts that fall within the Central Division. There are others in other Divisions, but I don't have figures on that. So far as we have been able to determine, it has been a beneficial thing all the way around, both for the dairy, Mr. Mojonnier and ourselves.

Q. Do you have any interest in the Mojonnier-Dawson Company or in the outcome of this litigation?

A. None at all, sir.

By Mr. McCanna: That is all.

Cross-Examination by Mr. Clement.

Q. Mr. Farrell, were you with the American Can Company in 1950?

A. Yes, sir.

Q. Do you recall having an interview with Mr. Rosboro of Vapor Heating at that time in 1950, perhaps in June or July, 1950?

784 A. Possibly so, if that is the organization who had some ideas of producing some equipment. We did talk to them and so far as I know, they never produced

any, but I could not be sure that that is the name exactly, but it does sound familiar.

Q. What kind of equipment was Vapor Heating interested in producing?

A. As I understand it, a filler to fill our milk containers.

Q. At that time, 1950, were American Can cartons available to the small dairies?

A. The cartons were available, yes, sir.

Q. Was American Can able to keep up with its demands from the large dairies at that time?

A. In 1950? Yes, I think we were.

Q. Were you prepared to take on a large quantity of requirements from the small dairies at that time?

A. The small dairy requirements don't represent the large business in the aggregate.

785 Q. Well, I am assuming that if the small dairies went into paper cartons, there would be quite a demand in addition to what you were furnishing, is that correct?

A. There would be an additional demand, but I wouldn't call it particularly large.

Q. Then it is your position that in 1950, American Can was able with its present equipment at that time to keep up with the demand from the large dairies?

A. That is correct.

Q. Could they have taken on a larger demand?

A. We could have taken on additional business provided there were milk fillers available in which to close the package.

Q. Do you know how many cartons you were producing at that time a year?

A. Do you have any particular factory in mind, or countrywide or—

Q. Countrywide.

A. I can make a guess that it was somewhere in the neighborhood of three billion, perhaps a little more.

Q. Would it have been the case in 1950 that the 786 small dairies would have to order carload lots of American Can cartons?

A. No. We have two ways of making delivery of our package. One is by truckload and the other by carload. There is no other way to make delivery.

Q. When you say truckload, you mean by vehicle as against the railroad carload?

A. That is right, yes. As a matter of fact, we make considerable delivery by our own trucks.

Q. Do you have a Maywood plant?

A. That is right.

Q. How many small dairies could be supplied with cartons from the Maywood plant?

A. How many?

Q. Yes.

A. How many cartons will they use?

Q. I am asking you, sir. You are the expert on this carton business.

A. Well, being an expert doesn't make me able to answer your question.

Q. You don't know how many small dairies could be serviced by the Maywood plant?

787 A. The requirements of the small dairies, if they were known to me, I could tell you.

Q. I see. How many—

A. I can say now we are supplying probably one hundred twenty-five.

Q. From the Maywood plant?

A. Yes.

Q. Is the plant the same as it was in 1950 as far as its physical equipment is concerned?

A. We have added additional equipment in the plant.

Q. Additional equipment?

A. Yes.

Q. Would that additional equipment make the difference between what was being supplied then and what is now being supplied to these small dairies?

A. No, it would not. But I would like to clarify it to the extent that it is somewhat beside the point as to the equipment we have now. We have found with the improvement of our own manufacturing techniques we are able to get considerably more production off our lines in 1955 than we did in 1950. In other words, the lines are
788 producing at a higher rate.

Q. Do I understand your testimony now to be that in 1950, you could have taken on a fairly substantial increase in the demand for cartons and have met it with the equipment you had in use at that time?

A. That is right.

Q. Even at the Maywood plant?

A. Yes, sir.

789 Q. Is that $17.98 per thousand cartons a carload lot price or just what is it?

A. That is the lowest price that we quote, and it is on the basis of $75,000 of a particular size or label.

Q. And the 75,000, how does that relate to a carload?

A. A carload will average around 83,000 in the summertime to 87,000 in the winter. We shift the loading a little bit because of heat conditions.

Q. You say that is the lowest price you quote?

A. Our lowest price, that is, the lowest quantity price is 10,000, and that price, I think, is 20 cents differential over 75,000 lot price. In other words, there is a very, very small difference. It would be hard to measure in the dairy operation as to the efficiency of it.

Q. There is a very small difference between which figures?

A. The 10,000 and the 75,000 lot price—about 20 cents a thousand.

Q. Then the $17.98 figure is the figure per thousand for lots of 75,000?

A. That is right. Add 20 cents to that, that would
790 be the price per thousand for 10,000 lots of any particular size.

Q. I see, 20 cents per thousand in addition to this $17.98 price for lots of 10,000, is that correct?

A. That is correct.

Q. How small a lot do you sell?

A. 10,000.

Q. Did you mean to imply before that you do not know how many a small dairy would normally order, and I use small dairy generally?

A. No. You asked me how many small dairies could we handle. How many small dairies are you talking about, and are they using a thousand a day, five thousand or five hundred, I wouldn't know.

Q. My question is how many cartons does the average small dairy order at one time?

A. Either a truckload or a carloand. That is the only way we make shipments.

Q. How many would be in a truckload?

A. Around, depending on the size of the truck, anywhere from 25,000 to 35,000.

Q. So that the smallest number that a small dairy
791 could order would be 25,000 or 35,000?

A. That is correct, if he is ordering directly from

us. If he orders from our jobber, he can get them in any quantity the jobber might decide to sell them in.

Q. Do you know if there is a storage problem in the small dairies with respect to your cartons?

A. I would suspect it was in direct proportion to the volume of containers which they would use. I would imagine that the storage problem for small dairies is considerably less than it would be for large dairies. Any preformed package, obviously, is going to take up more room than a flat blank.

Q. Did the Pure-Pak cartons go into small dairies in larger numbers than the American Can cartons initially in the 1950 period, for example, or 1951?

A. Are you talking of Pure-Pak cartons sold by Ex-Cell-O or by the preformed companies?

Q. Either one.

A. I would suspect that so far as small dairies are concerned, Pure-Pak carton based on the use of equipment provided by Pure-Pak would have gone into small
792 dairies considerably less than our package. However, if you are talking about the preformed Pure-Pak carton to be filled on equipment, such as Mr. Mojonnier makes, well, he gave you the figures on the production of those machines. I imagine that is in the record.

Q. My question is, in the early days of the small dairies operating these fillers for filling paper cartons, did the Pure-Pak cartons meet a much greater reception initially than the American Can?

A. No, we were the first.

Q. In terms of volume?

A. Well, I don't know the production figures of either Pure-Pak or the Preformed cartons. I don't believe I can answer that accurately, except to say that in my opinion—

Q. That is what I want.

A. The use of our package was as great as that of the competitor.

Q. And when you say the competitor, are you talking about both Preformed and Ex-Cell-O, as you characterize them?

A. That is right. My thinking is a little bit clouded, not knowing exactly what you mean by small
793 dairies. We find some of them that use the Pure-Pak equipment which might be considered a small dairy from the standpoint of either Pure-Pak or ourselves, and be a large dairy as considered by those who may purchase Mr. Mojonnier's equipment.

Q. Was there ever any change in policy in the American Can Company about furnishing cartons to small dairies?

A. There never has been any change in policy. Rather, there is no policy on fiber milk that is any different from any of our other packages in that it would represent desirable business that we could handle profitably. The only way we make money is by the sale of containers. We were then anxious and still are to sell them.

794 Q. Do you recall discussing the same problems with Mr. Rosboro of Vapor Heating, whom I referred to originally?

A. I rather imagine we may have. I don't recall it.

Q. Your present recollection is that you told him the same things you have told me today, is that correct?

A. I don't think we went into anything in that detail, no.

Q. But he was interested in the market?

A. It is my recollection that they would be discussions regarding a piece of equipment. I think we brought a man out from New York from our Equipment Division to discuss the technical aspects. We didn't talk sales to my knowledge.

Q. Do you remember an interview with a representative of the Trundle Engineering Company in or about June, 1950?

A. I don't recall that.

Q. That would be approximately the same time that you were interviewed by Mr. Rosboro.

A. Who are they? Maybe if you jogged my mem-
795 ory, I might have some ideas.

Q. I believe at the time they were making a survey for the Vapor Heating Company.

A. I don't know.

Q. You don't recall that?

A. No.

Q. You don't recall his asking—well, you say you don't recall. I will strike that.

That is all.

By Mr. McCanna: No redirect. That is all. You may step down.

(Witness excused.)

By Mr. McCanna: I will call Paul Peterson.

PAUL S. PETERSON, called as a witness on behalf of the Plaintiff, having been first duly sworn, was examined and testified as follows:

Direct Examination by Mr. McCanna.

Q. Please state your full name.
A. Paul S. Peterson.
Q. Your residence?
A. 4050 Rose Avenue, Western Springs.
796 Q. Your occupation?
A. I am technical director of DeMert & Dougherty.
By Mr. Voland: Will you please speak up, Mr. Peterson? I can't hear you over here.
By the Court: Technical director of what?
By the Witness: DeMert & Dougherty, Incorporated.

By Mr. McCanna:

Q. Where are they located?
A. 3001 West 47th Street, Chicago.
Q. Please describe briefly the nature of the business of DeMert & Dougherty.
A. We are basically in the chemical business. We do small can filling and sell chemicals in bulk and in small containers.
Q. By small can filling, what do you mean? Will you tell us briefly some of the technical description of that type of filling?
A. We cover quite a field in that. In one portion of our corporation we fill aerosol cans, which are the pressure loaded containers from three ounce sizes up and through the sixteen ounce size. We also fill non-pressure containers in another division of our company, using a different
797 process, a different type of equipment.
Q. As to these aerosol containers, what kind of products are filled into those?
A. We there, again, cover a very wide range of the chemical field. We are filling insecticides, room deodorants, paints, protective coatings of all descriptions, and a wide range of products used in the home, anything that can be put in a tin can and be dispensed under pressure. That gets into your shave creams and the whole line of home products.
Q. What are those pressurized product cans commonly called?

A. Aerosol cans.

By the Court: Will you suspend a moment, please?

(And thereupon the Court gave attention to another matter, after which the following further proceedings were had herein:—)

By the Court: Proceed.

798 By Mr. McCanna:

Q. I have heard the word "bombs" used here frequently in this case. Does that term describe the aerosol containers you are talking about?

A. It is widely accepted, yes.

Q. How long have you been employed by DeMert & Dougherty and in what capacities?

A. 22 years as superintendent, production manager, and technical director.

Q. Do you consider yourself familiar with various filling principles used in the filling of these products into the containers?

A. I do.

Q. In the course of your duties, have you been called upon to select and purchase equipment best suited for your filling problems?

A. I have had that responsibility.

Q. Please tell us briefly what problems you were confronted with when you engaged in the making or the filling of these so-called aerosol bombs.

A. To start in, the pressure loading in aerosol and handling the gases which are used as the propellent brought on many, many problems relative to the handling of
799 this material and getting it into the container. It is a regenerative gas, without pressure—it is a gas and by gas I mean it is as light as air and would be freely suspended in the air. Either under depression or under compression we can keep it in a liquid form.

Back quite a number of years ago when we decided to enter the pressure loading or the cold filling of these bombs or aerosols, we found that we needed a machine that would not develop a pressure internally and would give us a measured amount of this elusive gas for each container.

Q. Do you recall what kind of equipment you considered for your purposes on these aerosol bombs?

A. I studied and tried and worked on rotary type of filler, on the positive displacement type of filler, and found all of them lacking in some respect.

Q. Would that so-called positive displacement type include what is sometimes called the piston type?

A. That could be described as a positive, yes.

Q. You say you investigated or searched this type of equipment for your needs?

A. I did.

Q. Did they serve your purpose or did you make
800 any purchases of that kind?

A. No. I did make a purchase at that time but it was on the Electromatic principle. It was not on the positive or the rotary type of filler.

Q. By Electromatic, do you mean the Electromatic filler made by the Mojonnier-Dawson Company?

A. By Mojonnier-Dawson, right.

Q. Now please explain briefly what you did in the way of putting in equipment of this kind, that is, the Electromatic.

A. Mojonnier-Dawson Company at that time were offering for sale an Electromatic filler which we ordered put in our plant, and found that is worked very, very satisfactory for our purpose and for the handling of this difficult material.

Q. I have here a model which is marked Plaintiff's Exhibit 66. It is a replica, as you will see, and I ask you whether you recognize that.

A. I do. I would say it was a very good model of the fillers that we have in our plant.

Q. Made by whom?

A. Made by the Mojonnier-Dawson Company.

Q. Is that the Electromatic filler to which you have just testified?

801 A. That is correct.

Q. Now will you please tell us what kind of products you fill on this machine and in what kind of containers? Give us some description of that.

A. Well, in the bomb or in the aerosols, our machines are adjustable to take capacities from three ounce containers up through sixteen ounce. We fill a very wide range of products on these machines, again going through the insecticides, room deodorants, paints or protective coatings, ignition sealers, shave cream, and many, many products in the chemical field that can be dispensed in a spray type of package or aerosol.

802 Q. Is the quantity dispensed in these machines an important matter?

A. For a contract filler in this category, it is highly important. Speed obviously is of the essence. We have operated this type of filler in speeds ranging from 20 a minute to as high as 86 a minute.

Q. You said something about contract filler. What do you mean by that?

A. By contract filling, a great many people in this aerosol work due to the cost of the entire line, take on outside work, contract filling, relative to this to help with some of the expense.

Q. Is that what is sometimes referred to as jobbing work?

A. That could be. It could be called jobbing, but from jobbing you would have to say filling. I mean, you would have to complete it. I mean, I don't think of a jobber as being that, or I don't feel that we are jobbers.

Q. Oh, yes. I believe that has a different significance.

Now to make clear, though, you were referring to cases or jobs where your company makes a contract to fill cans or bombs for someone else and sells them to the trade, is that it?

803

A. For a fee, that is correct.

Q. Then in the course of your work, you mentioned, I believe, the many different products that you fill on these Electromatic fillers. What would you say about the facility of those fillers for changing over from one job to another?

A. It is one of the easiest fillers that we have of any type to change over from products. It simply means emptying out the filler and cleaning out a stainless steel tank, which is quite easy to do. Our changeovers, depending on the product, would average, I would say, 20 minutes to 30 minutes at the most.

Q. Now what kind of usage do you give these Electromatic fillers, do you know, as to periods of time and quantities?

A. Well, they are capable of running eight hours a day, let's put it that way. If we have the business and the cans to run, why, obviously, they run eight hours a day, or around the clock. I mean, we work one shift in our particular company.

804

Q. Approximately what number of these bombs would be run through in a day's run on one of these machines?

A. Well, that is highly dependent on the product that

is being run. Some can go through much more rapidly than others. Again, you would have to take the can into consideration, the type of container that you were running at the time.

I would have to go back to that other figure that you could run from a range any place from 20 to 86 by changing the speed and the operation of your filler or intermittent loading of the filler. I mean, there are many factors that enter into the rate.

805 Q. What is a high figure and a low figure, for example, in a day's run?

A. That is it. I mean, a low and a high figure would be 20 to 86, although it takes a specific type of can to hit the high figure, I might add.

Q. What does that 20 to 86 have reference to?

A. Cans per minute, I am sorry.

Q. Now would you say that the Electromatic filler was a solution to your filling problems?

By Mr. Clement: I object to that as leading, your Honor.

By the Court: Yes, you are leading him. Let him tell us about it.

By Mr. McCanna:

Q. What effect did the purchase of these Electromatic fillers have on your problems at the company?

A. Well, I knew of no other filler at the time, and I don't know of any filler today, that is commercially available to handle this specific product in the manner in which we must handle it.

Q. Do you have any interest in the Mojonnier-Dawson Company or in the outcome of this litigation?

A. None whatsoever.

806 By Mr. McCanna: I believe that is all.

Cross Examination by Mr. Clement.

Q. Mr. Peterson, I think you mentioned that you needed a filler for these bombs which would not develop a pressure internally. Is that what you said? I was not sure.

A. Yes, that is correct.

Q. What did you mean by that?

A. I mean this: The fact that this Freon gas, which we depress, or the gas that we use in any type of a filler on the positive displacement does not give you an accurate

fill because of the regeneration of its own pressure within this measuring device, whatever it may be.

If, for example, these filling devices here were used so that the pressure could not escape, then you would force an unequal amount to the bottom of this filler, and you would not get an accurate fill. That happens on a rotary or a positive displacement.

Q. So that it needs to have an arrangement such that the pressure will escape?

A. That is correct.

807 Q. So that a gravity type filler with an open top would satisfy that?

A. That is correct.

By Mr. Clement: Thank you.

By the Court: Is that all?

By Mr. Clement: That is all.

By Mr. McCanna: No redirect, your Honor.

(Witness excused.)

By the Court: We will adjourn at this time. I am going to have that Grand Jury matter the first thing in the morning. You may come in at 10:30.

(Whereupon an adjournment was taken in the above-entitled cause until 10:30 o'clock a. m. of the following day, Thursday, May 26, 1955.)

809 And thereupon the following further proceedings were had herein:

By the Clerk: Case on trial.

By the Court: Proceed.

By Mr. McCanna: Good morning, Judge.

By the Court: Good morning.

By Mr. McCanna: I will call a witness, Mr. Lee Campbell.

LEE CAMPBELL, called as a witness on behalf of the Plaintiff, having been first duly sworn, was examined and testified as follows:

Direct Examination by Mr. McCanna.

Q. What is your full name?

A. Lee Campbell.

By the Court: L-e-e?

By the Witness: Right.

By Mr. McCanna:

Q. And where do you reside?
A. Angola, Indiana.
By Mr. Kipnis: What is that?
(Whereupon the answer was read as above recorded.)

810 By Mr. McCanna:

Q. What is your occupation?
A. Dairyman, processing and distributing milk.
Q. Do you operate a business for that purpose?
A. That's right.
Q. What is the name of the business?
A. Sunrise Dairy.
By Mr. Kipnis: What was the name?
(Whereupon the answer was read as above recorded.)

By Mr. McCanna:

Q. And where is that located?
A. Angola, Indiana.
Q. Will you state more in detail the kind of dairy business you operate?
A. We buy milk from the farmers and bring it into the plant and process it and redistribute it to stores, restaurants and houses.
Q. How long have you been in this business?
A. Since 1937.
Q. In the same place?
A. That's right.
Q. That same location?
A. That's right.
811 Q. Operating the same business?
A. Right.
Q. When you started—
By the Court: How many gallons does he handle a day?
By Mr. McCanna: That is interesting.

By Mr. McCanna:

Q. Will you please answer that?
A. We handle about 12,000 pounds a day.
By the Court: Translate that into gallons, measured by the gallon.
By the Witness: Eight and a half pounds.
By the Court: (Continuing.) And not by the pounds. How many?
By the Witness: Eight and a half pounds to the gallon.
By the Court: You were assuming that we can divide.

By Mr. McCanna:

Q. Just make an estimate, Mr. Campbell. It will be all right. Make an estimate as to what your daily volume is that you handle.

A. Well, I think our average volume would run pretty close to 1600 gallons a day.

812 Q. And that is put up in different kinds of containers, different sizes? Can you tell us something about that?

A. Well, we have two operations: One is glass and the glass cartons we put up from half pints to gallon containers and the other operation is paper, and it goes from half pints to half gallon containers.

813 Q. Roughly, how does that divide up in volume of your business?

A. About half of each, about half in paper and about half in glass.

Q. You stated, I believe, that your business has two phases to it, one—did you say wholesale?

A. Wholesale, yes.

Q. What is that business, briefly?

A. Well, that has primarily a store business, milk that

A. We mbuy milk from the farmers and bding it into goes into stores for resale out of stores.

Q. And what territory does your business cover, approximately, oh, I mean geographically?

A. Well, we cover practically the whole county. We are in the rural district and cover, probably within a fifteen mile radius, small country stores. We service them.

Q. And these stores that you deliver to, as you say, to wholesale, are in the small towns?

A. That is right.

Q. Including Angola?

A. Right.

Q. What is the population of Angola?

A. About 6,000.

Q. And then you have another phase of your busi-

814 ness which is delivery, is it, did you say?

A. You mean on the retail end?

Q. Retail end, yes.

A. That is where most of the glass business goes, or practically all of the glass business goes to houses, retail to houses, to homes, set off on the doorstep.

Q. Now when you started in business in 1937, were

there any other dairies in Angola County, in a similar business, I mean?

A. Yes. There were four other dairies in Angola and four other dairies in the County that made a total of nine dairies in the County.

Q. How many are there now?

A. We are the only home owned dairy left.

Q. The only one?

A. Yes.

Q. In 1948 and 1949, what was the condition of your business with respect to the use of paper cartons?

A. Well, we didn't have paper cartons at that time and everything was glass that we were putting out in 1948 and 1949.

I might add that the latter part of 1949, paper moved in on us from the larger cities. It was brought in
815 and that is when we began to get in difficulties to compete with them.

Q. What larger cities, for example?

A. Fort Wayne and Toledo, Ohio.

Q. And what effect did that have on your business?

A. Well, we lost practically all of our store business and most of them went to paper.

Q. About what percentage of that was it, of your business that you lost?

A. Offhand, I would say there was almost 50 per cent. I am basing that on the fact that our wholesale business and retail business is about 50-50.

816 Q. And what did that do to your business, financially, did you say?

A. Well, if you lose half of it, why, it takes you down quite a bit.

Q. At that time, did you know of any equipment available for filling milk into paper cartons?

A. Why, there was no equipment at that time available for us. If there was, we couldn't find any. There were machines to fill paper, but the small dairy couldn't afford it. The price was too high.

Q. Where were those machines, if you know?

A. Well, there was one made in Detroit and the Ex-Cell-O Paper Company was putting out a machine and American Can was putting out a machine, but they both were too expensive.

Q. What did you do, if anything, in trying to get out of this situation?

A. Well, I tried everything that I could think of to find the machine that we could use and it happened that we were on the West Coast at the time and I called on American Can Company out there to see what information I could get and I told them where we were located and
817 they told us they couldn't do us any good; that I should stop and see American Can Company in Chicago; that they were sure something was coming up that we could use.

On the road back, we stopped in Chicago, stopped at the American Can, and they referred us to Mojonnier-Dawson. They were at that time working on a new machine.

Q. Do you recall who you met at the American Can Company in Chicago?

A. Mr. Farrell.

Q. Is that Richard Farrell?

A. That is right.

Q. Is he the man that advised you what to do?

A. Yes.

Q. Do you recall what he told you?

A. Well, he advised us to go immediately and see Mojonnier-Dawson and get an order in for one of their machines.

Q. And did you do that?

A. We did.

Q. What kind—

A. (Continuing.) Before we went home.

Q. What kind of a machine did you order?

818 A. Well, we ordered a single spout Electromatic machine that would fill American cans only.

Q. Was it similar to any machine here in this court room that you see?

A. It was very similar to the machine over there, only it filled American cans instead of Pure-Pak cartons.

Q. You mean this one I am pointing to which is marked Plaintiff's Exhibit 39?

A. It was similar to that, only it didn't fill that type of can. It had a different mechanism on for closing.

By Mr. Voland: Mr. McCanna, would you fix the date of this conversation between the witness and Mr. Farrell, please, before you proceed?

By Mr. McCanna: Yes.

By Mr. McCanna:

Q. Do you recall about what date that was that you called on Mr. Farrell?

A. I can't give you the date offhand, but it was early spring of 1950.

819 Q. And at that time was anything said about obtaining American Can cartons to use with this Electromatic filler?

A. Yes, American Can promised me cartons if we could get the filler.

Q. Did they furnish cartons to you?

A. They did.

Q. In what kind of quantities?

A. Well, the first shipment, the first two shipments we had were in truckload lots, and we found out that coming from Chicago, the freight was so much higher on truck shipments that our later shipments all came in carload lots because we could get a carload practically for the same price we could get a truckload.

Q. Are you still using that first single spout Electromatic filler which you purchased as you have just testified?

A. No, our business began to increase on the wholesale on paper to the extent that we couldn't bottle fast enough, and we traded that machine in for a two spout filler.

Q. Of what make?

A. Mojonnier-Dawson.

Q. What kind of cartons does that handle?

820 A. That handles both American Can and Pure-Pak cartons.

Q. In different sizes?

A. Yes, from half pint up to half gallon.

Q. Are you still using that Electromatic filler?

A. We are.

Q. Made by Mojonnier-Dawson Company?

A. We are.

Q. Is it satisfactory?

A. It is.

Q. Do you have any interest in the Mojonnier-Dawson Company or in the outcome of this litigation?

A. We do not.

By Mr. McCanna: That is all.

Cross-Examination by Mr. Clement.

Q. Mr. Campbell, where do most of your paper cartons go, as far as people who purchase paper cartons?

A. Will you state that again, please?

Q. To whom do you sell most of your paper carton milk?

A. Most of it goes to stores.

Q. Are there super markets in your area?

821 A. There is.

Q. How much goes to the super markets of the paper, roughly?

A. You mean what percentage?

Q. Yes, of the paper cartons go to the super market trade.

A. That is an awful hard question to answer.

Q. Well, just generally. Is it half, two-thirds, one-third?

A. I would say half goes into super markets.

Q. When did you purchase your filler from Mojonnier-Dawson?

A. In the spring of 1950.

Q. Shortly after you talked to Mr. Farrell?

A. That is right.

Q. And you began to obtain cartons immediately from American Can, is that correct?

A. That is right.

Q. Did you have any trouble in the operation of that first machine?

A. Not any more than you would any other machine. Our main trouble with the machine was getting used to the machine, knowing how to operate it.

Q. Did you have any mechanical trouble with the

822 machine?

A. No.

Q. You mentioned, I believe, that you first got your cartons in in trucks, is that correct?

A. That is right.

Q. And you switched to railroad carloads, is that correct?

A. That is right.

Q. And that was an economic reason, that is, it was cheaper?

A. Yes.

Q. How did you store your cartons?
A. In the building we had.
Q. Did you have any difficulties with cartons that had been stored?
A. No, we had not.
Q. Did you have any leakers?
A. No.
Q. No leakers at all?
A. Not to speak of. I would say we never had leakers—any paper object would leak.
Q. I am talking about 1950.
A. With the cartons?
Q. Yes.
823 A. No.
By Mr. Clement: That is all.
By Mr. McCanna: No redirect.
(Witness excused.)
824 By Mr. McCanna: I will call Mr. Joseph Rosen.

JOSEPH ROSEN, called as a witness on behalf of the Plaintiff, having been first duly sworn, was examined and testified as follows:

Direct Examination by Mr. McCanna.

Q. Please state your full name.
A. Joseph L. Rosen.
Q. Where do you reside, Mr. Rosen?
A. Glencoe, Illinois.
By Mr. Voland: We can't hear you over here, Mr. Rosen.

By the Witness:

A. Glencoe, Illinois.

By Mr. McCanna:

Q. What is your occupation?
A. I am president of the Illinois Creamery Supply Company, Chicago. We are engaged in the manufacture and jobbing of dairy equipment and supplies.
Q. By dairy equipment and supplies, what does 825 that cover generally?
A. Practically all equipment that a dairy or creamery or ice cream plant will use.

Q. How long has Illinois Creamery been in business?
A. Thirty-three years.
Q. Is it a substantial, a large company?
A. Just a medium sized company.
Q. Approximately what does it gross a year?
A. Sales?
Q. Yes.
A. About five million.
Q. Dollars?
A. Yes, five million dollars.
Q. How long have you been the president of Illinois Creamery?
A. I have been president since its inception.
Q. In addition to being its president, are you also active in its management?
A. Yes.
Q. Are you the general manager of it?
A. Yes.
Q. And have been all these years?
A. Yes.
826 Q. Are you active in National Dairy Equipment Association affairs at all?
A. Yes.
Q. Do you have a wide acquaintance in the dairy industry?
A. Yes.
Q. In your work do you personally come in close touch with the dairy industry?
A. Yes.
Q. Will you tell us briefly something about that?
A. When we first started I was actually selling, and since then I have always maintained an active interest in the dairy field through our men and through some accounts that I still call upon.
Q. Does that include calling on dairy plants around the country?
A. Yes, some of the larger plants.
Q. Do you ever call on the smaller plants also?
A. Yes.
Q. Are you familiar with the Electromatic filler for paper cartons made by the Mojonnier-Dawson Company?
A. Yes.
Q. Do you sell a competitive filler?
827 A. Yes.
Q. That is one for paper cartons?

A. Yes, we do.

Q. What cartons are they made for?

A. The Pure-Pak container. It is called the Ilreco Pure-Pak container.

Q. Those cartons are the ones put out by Ex-Cell-O in Detroit?

A. The cartons are made by our company. The carton is a Pure-Pak container, the patents on which are controlled by Ex-Cell-O Company of Detroit, yes. The only difference between our container and the standard Pure-Pak container is that ours is a tapered and a nested container.

By Mr. Yoland: We can't hear a word you say.

By the Witness: Shall I get up closer to the mike here?

By the Court: That mike won't help you a bit. That just helps the Reporter. You will have to speak louder.

By Mr. McCanna:

Q. Mr. Rosen, I just wanted to establish here something more about your operations in supplying car-
828 tons. Those cartons are made by machines supplied by whom?

A. Ex-Cell-O Company, Detroit.

Q. And you operate some of those machines here in Chicago?

A. Yes.

Q. Both for making the Pure-Pak cartons and also the Ilreco cartons?

A. Only for the Ilreco Pure-Pak container.

Q. On what principle does the Ilreco filler that you mentioned operate?

A. What do you mean by principle?

Q. Well, I mean the general principle on which the machine fills or measures the fluid.

A. One model will automatically take a container from a stack of empty containers, insert it into the machine. It will fill it by a piston type filler pump. It will seal it and deliver it at the other end of the machine, completely folded, stapled and ready for delivery.

Q. What is the model number of that?

A. That is the LT series.

Q. What does that machine sell for?

829 A. Approximately $7,000.00.

Q. Did you mention another model?

A. We have a model MT machine also, which is semi-

automatic. There the operator manually precrimps the top of the container and inerts it into the machine. From that point on the container is filled and sealed and delivered back to the operator automatically.

Q. And what does that machine sell for?

A. About $5,000.00 and that handles from half gallons down to half pints inclusive.

830 Q. When did the LT model come on the market?

A. I think it was around, about 1951.

Q. And when did the model MT come on the market?

A. In 1953.

Q. What was your first knowledge of the Electromatic filler?

A. In 1948 there was an advertisement in the Milk Dealer, I think it was the August issue, whereby a concern known as the Zinpak Corporation had developed a preformed paper milk container, and the Mojonnier-Dawson Company had developed a filler and sealer for the Zinpak containers.

We contacted the Zinpak Corporation—

Q. Did you see this article?

A. Yes, I saw that article.

Q. Is that what prompted you to contact—

A. Yes, the Zinpak Corporation

Q. Go on, please.

A. And I made arrangements with the Zinpak Corporation for the distribution of their preformed containers, and then I contacted Mojonnier-Dawson Company and made arrangements for the sale of their machine called the Electromatic filler, the Mojonnier-Dawson Electromatic filler, for the territory in which we ourselves sold. Then sub-

831 sequently, I think it was a month or two months thereafter, we entered into a national exclusive sales agreement with Mojonnier-Dawson Company.

Q. At the time you made this arrangement with Mojonnier-Dawson Company, had you seen one of their Electromatic fillers?

A. No. They had none completed at that time, but were in the process of developing one for this particular container. But we did see a proposed artist's drawing of what they would furnish us.

Q. And what did you do toward promoting this or going ahead with this arrangement which you just described?

A. In October, the end of October, there was a national

dairy show at Atlantic City. Prior to that we completed arrangements for national distribution of the Mojonnier-Dawson filler sealer, Electromatic filler sealer, and also completed arrangements for the exclusive distribution of all of the Zinpak containers which were to be manufactured at the Marquardt Company here in Chicago, nationally. Then we went to the dairy show with the sale of the container and the sale of the machine.

832 Q. Did you take any sales literature with you on this Electromatic?

A. Yes. We took a circular which we had prepared, and we took an artist's drawing of the filler sealer, and also some sample containers to the dairy show in Atlantic City.

Q. I hand you a circular and ask you whether you can identify that.

A. Yes. This is the circular which we prepared.

Q. And the one you took to the dairy show in 1948?

A. Yes.

Q. Was that distributed in quantities?

A. Yes. May I see that circular for just a moment?

Q. Surely.

A. Yes, that is it.

By Mr. McCanna: I will ask the reporter to mark this as Plaintiff's Exhibit 69 for identification.

(Thereupon said document was marked Plaintiff's Exhibit No. 69 for identification.)

By Mr. McCanna: Would counsel like to inspect this?

833 I offer this in evidence as Plaintiff's Exhibit 69.

By the Court: Any objection?

By Mr. Clement: No objection.

By the Court: It may be received.

(Said document, so offered and received in evidence, was marked PLAINTIFF'S EXHIBIT NO. 69.)

By Mr. McCanna:

Q. Now, Mr. Rosen, at this dairy show in Atlantic City—was it?

A. Yes, Atlantic City.

Q. That is in 1948, and that is a national show?

A. Yes.

Q. What kind of trade did you offer this to?

A. Well, we offered it to all the dairies, but it naturally would appeal only to the smaller and medium sized milk plants.

Q. Did you do anything further than merely offer this Electromatic filler for the Zinpak cartons at the show through the medium of these circulars, Plaintiff's Exhibit 69?

A. We completed arrangements at the show for national distribution and also started accepting orders for the machine and for containers at the show.

834 Q. National distribution of what?

A. Of the machine and containers.

Q. And what was the outcome of that?

A. Well, within, oh, ninety days after the show—the show was in October—within ninety days, I think, we had booked orders for around 600 machines.

Q. What would that amount to in dollars, roughly?

A. On machines alone around $3,000,000.

Q. Would you say that that was an ordinary reaction to the offer of a filling machine?

A. At that time there was a tremendous need in the industry for a container and a filler sealer by the small dairies, and it was overwhelmingly received and sought for. As a matter of fact, after the first few hundred orders, we didn't solicit any more. They just came to us and placed their orders.

Q. And on these orders that you were receiving, had the persons giving the orders ever seen one of these machines?

A. No.

835 Q. You are just basing this largely on your reputation in offering it and based on these circulars?

A. Yes. We guaranteed, of course, that the machine would work properly or their moneys would be refunded, of course.

Q. Did you actually fill all of these orders?

A. No, no. We, I believe, ordered a batch of 21 or 22 machines from Mojonnier-Dawson, and I think we shipped seven of the machines and put seven machines into service.

Q. Can you explain that, briefly, as to why you didn't complete the delivery of all of these orders?

A. Well, the first 20 machines we thought would be our experimental machines; we would put them in various plants and see how they worked out. Both—in my opinion, both the entire program was a failure for the reason that the machine that Zinpak Corporation had to produce, the containers did not function right. They could get no production to speak of.

I think the greatest production they had was around, in one day's run, was 12,000 of the only machine they
836 had.

Secondly, the Mojonnier-Dawson filler-sealer in itself did not work satisfactorily. We had a lot of trouble with the machine. We had a lot of trouble with the container and after a period of time had elapsed and a lot of money had been spent in trying to perfect the machine and the container, the filler-sealer machine, we gave up the entire program.

Q. Do you recall whether the filler itself, that is the filler unit, was satisfactory?

A. The filler unit in the Mojonnier-Dawson machine was fairly satisfactory. We had very little trouble with that portion of the machine.

Q. Yes. Now, Mr. Rosen, at the time you first heard of the Electromatic filler, did you know of any other paper carton available for small dairy plants?

A. No. Well, I will change that. It was available for small dairy plants but machines—in those days, there were only two types of machines. They would lease—one machine was made by Ex-Cell-O Corporation and they would lease these machines and it would be a minimum rental,
837 and also a minimum production rental was required and it was beyond the means of the smaller dealer to take those machines and pay the minimum required.

The American Can Company made a preformed container and leased the machine and again, the minimum requirements would be considerably more than the small dairy could afford. So that, actually, there was nothing available for the smaller dealer.

838 Q. Do you have any interest in the Mojonnier-Dawson Company or in the outcome of this litigation?

A. No.

By Mr. McCanna: That is all.

Cross-Examination by Mr. Clement.

Q. Mr. Rosen, what was the date of the arrangement which you made with the Mojonnier-Dawson Company for handling the fillers before the dairy show?

A. I think it was possibly in August or in September of 1948.

Q. And you say that at that time when you made this

arrangement, you did not see any representation of the machine except this dairy sales journal advertising?

A. Well, after I saw that, then I contacted Mojonnier-Dawson. I saw their artist's design of how the machine would be constructed and also some prints. I had a pretty good idea of how the machine was going to be constructed.

Q. Did you go to the Mojonnier-Dawson plant?

A. Oh, yes, of course.

Q. Did you ever see any representation of the ma-
839 chine in physical form at the plant?

A. No.

Q. You never saw a laboratory model of—

A. Of the filler sealer?

Q. Of the filler.

A. Well, the filler principle is quite simple. That was explained to me and I thought it would work. And, as a matter of fact,—

Q. Was there a model shown to you at that time?

A. I believe there was. I am not sure, but I believe there was a model, because—yes, that same model was used for filling of whipped cream.

Q. Was that used later by the Super Whip Company?

A. I beg your pardon?

Q. Was that used later by the Super Whip Company?

A. Yes. Some of the fillers were used in connection with the filling of whipped cream by the Super Whip Company.

Q. Who owns the Super Whip Company?

A. I am the head of that company, also.

Q. You are the head of that company also?

A. Yes.

Q. Did Mr. Mojonnier talk to you about patent protection on the filler?

840 A. Yes.

Q. At that time?

A. Yes.

Q. Mr. Gross, I call your attention to Plaintiff's Exhibit 69 again and ask you, when was this first put out?

A. The name is "Mr. Rosen."

Q. Excuse me. Mr. Rosen.

A. Yes.

Q. I am sorry.

A. This was put out in 1948. As to the month, I am of the opinion that it was put out before the dairy show which was held at the end of October in 1948.

Q. Do you find a notice regarding patent protection on that circular and if you do, would you read it, please?

A. Yes. There is a notice, a note at the bottom of the circular which states:

"Bottles and fillers covered by patents issued and pending."

Q. Who was responsible for putting that on there?

A. Directly responsible, I presume, that our advertising man was, with the consent of Mojonnier-Dawson and the consent and approval of the Zinpak Corporation.

841 Q. Thank you. I believe you mentioned that the response to these advertisements was rather tremendous, is that correct?

A. I think I mentioned "overwhelming", yes.

Q. Were cartons available to the small dairies at that time from either Ex-Cell-O or American Can?

A. Yes.

Q. Were they freely available?

A. No.

Q. Was it necessary to buy a machine to use with the blanks to make the cartons available?

A. I believe in 1948 it was necessary to lease the machines. It may have been possible that you could buy a machine from Pure-Pak. With American Can, I don't believe it was possible to buy. You had to lease the machine.

842 Q. And did those leases or purchases demand rather substantial amounts of capital? Is that correct?

A. No, not too much down payment on either of the two machines, either the machine produced by American Can or by Ex-Cell-O.

Q. Could a small dairy make an investment of that kind?

A. The original investment, yes.

Q. It could?

A. Yes.

Q. Could it economically run such a machine?

A. No.

Q. I believe you referred to the operation of the filler-sealer that was used with the Zinpak machine as being unsatisfactory, is that correct?

A. Yes.

Q. Did you have difficulties with the filler itself?

A. Not too much difficulty with the filler portion of the filler-sealers. That worked fairly well, yes.

Q. Would you call the dispensing of the filler an accurate measure, comparable to the piston type
843 that you mentioned?

A. No.

Q. Mr. Rosen, what was the price that you were asking for the unit as advertised in this Plaintiff's Exhibit 69?

A. I believe it was $4950.00.

Q. And the availability, the supposed availability of a successful Zinpak carton was a tremendous factor in the market, I presume, at that time?

A. Oh, yes. Oh, yes.

Q. The carton was equally significant with the filler, as far as the market was concerned, wasn't it?

A. Well, it had to be a tie-in of both. The carton is of no value unless a machine can be built to fill it and seal it and the filler-sealer would be of no value unless there was a container it could fill and seal.

Q. In your opinion, is making a successful paper carton for milk a considerably greater problem than a filler?

A. Yes.

By Mr. Clement: Thank you. That's all.

By Mr. McCanna: No redirect examination.

(Witness excused.)

844 By Mr. McCanna: I will call Mr. Harold Wainess.

HAROLD WAINESS, called as a witness on behalf of the Plaintiff, having been first duly sworn, was examined and testified as follows:

Direct Examination by Mr. McCanna.

Q. What is your full name?

A. Harold Wainess, W-a-i-n-e-s-s.

Q. Residence?

A. 314 Russet Lane, Highland Park, Illinois.

Q. And your occupation?

A. I am a public health food sanitation consultant.

Q. Are you in business as a consultant?

A. As a consultant, that is right.

Q. Where do you operate?

A. 228 North LaSalle.

Q. Will you state briefly what your qualifications are in this sanitation field, educationally and by experience?

A. Well, I have a Master of Science and Agricul-
845 ture from Purdue University where I specialized in dairy technology. I have operated dairy plants in this area.

I spent two years with the York Corporation in their High Temperature, Short Time Pasteurization Division.

I have set up control laboratories for such people as Dean Milk Company. I spent ten years as milk and food consultant for the Public Health Service in various stations throughout the country.

I was chief sanitary officer for the Chicago Board of Health and when I left them, I went into business for myself as a consultant in industry.

Q. About how long have you been in this dairy field and sanitation work?

A. Since 1938.

Q. I believe you mentioned Public Health Service. What particular branch would that be?

A. The Milk and Food Branch of the Public Health Service is the branch that it would come under.

846 Q. Is that state or national?

A. That is federal. That is a U. S. Public Health Service.

Q. Now in the course of your work, I assume you are thoroughly familiar with the Board of Health regulations in the dairy industry?

A. Yes, sir.

Q. And you have occasion to inspect the equipment in dairy plants?

A. Yes, sir. I am doing that constantly.

Q. And you have been doing that over a period of years?

A. I have been doing that since 1940.

Q. And has this included inspection of milk filling equipment?

A. Yes, sir.

Q. And you are familiar with the different types of milk fillers that have been in use in plants over that period?

A. Yes, sir.

Q. Do you have occasion to inspect new equipment of that kind?

A. When I came with the Public Health Service, from that period on, it was one of my duties to review new
847 milk equipment.

Q. Do you know whether there was a demand in the dairy industry prior to 1948, say, to 1950, for an inexpensive filler for milk for filling paper milk cartons?

A. Yes, there was.

Q. Will you tell us briefly what your experience was in that regard?

A. Well, one of the jobs that I had with the Public Health Service is making what we call milk sanitation surveys for them. We went all over the country and made surveys of communities and due to the fact that the small dealer was being forced out of business, due to the lack of paper, we gave permission to the small dealer to have his milk bottled by another dealer in paper so that he could remain in business.

Of course, it was costly, but it was his only method of having a paper container at the time. So, I mean, we did have a pretty good knowledge of that field, having given permission for that particular function.

Q. Now in reference to the small dairy plants in this period, what was your experience in so far as
848 concerns the availability of filling machines for those paper cartons?

By Mr. Voland: Will you fix the time more definitely, Mr. McCanna, please?

By Mr. McCanna:

Q. Well, say in 1948, 1949.

A. Well, in that period, there were none generally available on the market that we knew of. I would—when I use the words "generally available" we knew of experimental models that we had seen, but none that were actually available.

Q. Are you familiar with the Electromatic filler made by the Mojonnier-Dawson Company?

A. Yes, sir.

Q. Do you recall when this Electromatic filler first came to your attention?

A. It came to our attention in April of 1948. We were called in to give an opinion on the filler at the Bowman Dairy plant in Chicago.

Q. Did you personally go in on that?

A. Yes.

Q. Do you recall what you found and what you did?

A. Well, I don't know exactly, but I do know that we

made quite a few suggestions as to changes—not
849 from an operational viewpoint; strictly from a sanitation viewpoint.

I think there were certain fittings that had to be changed to make it more sanitary.

Q. Did you make more than one inspection there?

A. I don't know whether we made more than one at the Bowman plant but after that, we were out to the Mojonnier-Dawson plant inspecting the machine quite a few times after that.

Q. You mean commercial manufacture of these machines?

A. That is right.

Q. Do you know whether or not you gave official approval to the filling machine at the Bowman Dairy Company?

A. We did not give official approval at that time. The official approval came later.

Q. Do you know when that was given?

A. I don't know the exact time when that was given. That would be a matter of record.

850 Q. Do you have any record of anything connected with that inspection that might have been dealing with approval?

A. You mean at Bowman Dairy?

Q. Yes.

A. Well, at the time, I say we didn't approve it at the time. We made recommendations for changes in the unit itself and there were a number of recommendations made after that at subsequent visits and it was finally approved after all the changes were made, from the sanita ion viewpoint.

That has nothing to do with whether it can produce anything, you understand. It is strictly the sanitary requirements of the Public Health Service.

Q. Yes. I just have one more question: Are you interested in any way in the Mojonnier-Dawson Company?

A. No, sir.

Q. Or in the outcome of this litigation?

A. No, sir.

By Mr. McCanna: That's all.

851 *Cross Examination by Mr. Clement.*

Q. Mr. Wainess, in 1948 and 1949, was there a considerable demand for paper cartons among the small dairymen?

A. Yes, there was.

Q. Why did they have that demand?

A. Mainly to maintain their wholesale accounts. They were losing their accounts to the stores and it wasn't just the loss of the milk business but the loss of cheese and butter business that went along with it to the stores.

Q. Was it the case of the cartons being freely available to them at that time and nobody having a filler?

This was 1948 and 1949.

A. I don't know what you mean by "cartons being freely available."

Ex-Cell-O—you could buy Ex-Cell-O cartons.

Q. Could a dairyman call on the telephone and get a truckful of cartons if he had a filler in 1948, do you know?

A. He could get a truckload of American Can cartons.

852 Q. In 1948?

A. Sure, if he had a filler.

Q. I am talking about the small dairyman.

A. If he had a filler—Ex-Cell-O—American Can would sell it to them.

Q. Do you know of any small dairyman who did?

A. No, sir. There was no filler available.

Q. You say you saw experimental models of fillers during this period I am talking about. Did you ever see a model at the Mojonnier-Dawson plant?

A. Yes, I did. I saw a model at the time we were called in to inspect the Zinpak machine. That is when I saw a model in the Mojonnier-Dawson plant.

Q. Was that after you had seen the Bowman Dairy device?

A. Yes.

Q. You did not see one before the Bowman Dairy device?

A. No. The Bowman Dairy was the first one that I saw.

By Mr. Clement: That's all.

By Mr. McCanna: No redirect examination.

(Witness excused.)

853 By the Court: Take a short recess.

(Whereupon a short recess was taken.)

854 By the Court: Proceed.

By Mr. McCanna: I will call Mr. Grant Hoyt.

GRANT V. HOYT, called as a witness on behalf of the Plaintiff, having been first duly sworn, was examined and testified as follows:

Direct Examination by Mr. McCanna.

Q. What is your full name, please?
A. Grant V. Hoyt.
Q. Your address, residence address?
A. 1525 Norfolk Avenue, Westchester, Illinois.
Q. And your occupation?
A. I am sales manager for Alpha Engineering & Machine Works.
Q. Where are they located?
A. Mount Prospect, Illinois.
Q. What is the business of Alpha Engineering?
A. We design and build special equipment, and also offer the equipment for sale.
Q. What is this special equipment that you mentioned?
A. Well, it runs into a good many fields. However, we have specialized a great deal in the last few years on equipment for filling aerosols.
Q. How long have you been in that business?
A. Oh, I would say approximately five or six years, I am not sure.
Q. Before that, what business were you in, if any?
A. Personally or the company?
Q. You personally. What was your experience before that?
A. I was general manager of the Super Whip Sales Company in Chicago.
Q. What did they do? What was their business?
A. We processed and canned whipped cream.
Q. Prior to that had you had any experience in the dairy field?
A. Yes. Prior to that I was operating a milk plant in Nappanee, Indiana. In fact, my father was operating the dairy when I was born, so my background is in the dairy business.
Q. This equipment that is made by Alpha Engineering, do you come closely into contact with the manufacture of that?
A. Yes, I do, quite close.

855

Q. Please explain a little more in detail as to how—

856 A. Well, in many cases I am the only contact with the customer. I am more familiar with what the customer needs in the way of special equipment or a standard machine, and oversee the engineers in designing it and building it, and so forth.

Q. Does that apply to the machines for filling aerosols into containers which are sometimes called "bombs"?

A. Yes, that is right.

Q. Are you familiar with the Mojonnier-Dawson Electromatic filler?

A. Yes, I am.

Q. What was your first contact with that?

A. We organized the Super Whip Company in the spring of 1948, I believe, and our first filler that we furnished for filling whipped cream was the Mojonnier-Dawson filler.

Q. Do you recall approximately when that Electromatic filler was put into operation?

A. I think we started canning whipped cream in September or October of 1948.

Q. Is that company, the Super Whip Company, the same one that Mr. Rosen mentioned here when he was on the stand?

857 A. Yes, it is the same company.

Q. Now can you tell us what was your early experience with Mojonnier-Dawson Electromatic fillers in the aerosol field?

A. We originally bought the Mojonnier-Dawson filler for what they call cold fill system for filling aerosols, where both the concentrate or propellent are cooled before filling.

Q. By "we," you refer to?

A. The Alpha Engineering & Machine Works.

Q. What would Alpha do with that equipment?

A. In most cases we install it on our machine, which consists of conveying equipment for conveying the cans into the fillers, and then sell it as a complete machine, or in some cases a complete line for canning aerosols.

Q. So in reality, Alpha is the manufacturing concern which manufactures or assembles this aerosol filling equipment and sells it to concerns which use the equipment for filling the bombs?

A. That is correct.

Q. Do you recall about how far back it was that you

first had these contacts with the Mojonnier-Dawson filler and the aerosol?

858 A. I would say the winter of 1949 or spring of 1950.

Q. And at that time were there any other types of filling equipment that you were dealing with at Alpha for filling aerosols into cans or containers?

A. Well, we had built and sold a piston type for cold filling of Freon, but had difficulty controlling the weights and actually putting the unit in operation. We later replaced it with a Mojonnier-Dawson filler.

859 Q. When you say you replaced it, would you please explain that a little more fully?

A. Well, then again we purchased from Mojonnier the filler only, consisting of the filler and bowl and the valve assembled on the timer for controlling it, and installed it on our other machine.

Q. Did you continue to manufacture the piston type fillers for aerosol?

A. Not for the cold fill method, no.

Q. Do I understand your testimony then that the Mojonnier filler displaced the piston type at your place of business?

A. No. We are using the piston type filler when we fill Freon at room temperature, but not when we fill it at, well, temperatures below the boiling point.

Q. In this latter class of fillers, is the demand very substantial?

A. I am not sure which class you refer to.

Q. The cold fill process that you described.

A. Yes, it is quite extensively used in the field.

Q. What would you say about the Electromatic filler as to its commercial suitability in this field that you have just mentioned?

860 A. For the cold fill method of aerosol, it is still about the only filler on the market today. There are two or three other companies—two, I believe—that have tried to make a similar filler but have failed.

Q. Do you have any interest in the Mojonnier-Dawson Company or in the outcome of this litigation?

A. No, I do not.

By Mr. McCanna: That is all.

Cross-Examination by Mr. Clement.

Q. Mr. Hoyt, are you now with the Alpha Engineering Company?

A. Yes, I am.

Q. And you are also with the Super Whip Company?

A. No, I am no longer connected with Super Whip.

Q. I am sorry. How long have you been with Alpha Engineering Company?

A. I think it was the fall of 1949.

Q. Do you know if Alpha Engineering ever had any dealings with Illinois Creamery Supply?

A. Yes, we have.

861 Q. Do you know if Alpha Engeering was employed by Illinois Creamery Supply to work on the filler we have been discussing?

A. Yes, at one time we were.

Q. What was the nature of that employment?

A. It was to revise and build a new sealer for the filler to go on the filling machine.

Q. Was there any work on the filler done?

A. No, not to my knowledge.

Q. Just as a matter of scientific curiosity, Mr. Hoyt, I think you said that you used a piston type filler when you are filling Freon at room temperature, but at temperatures below the boiling point you use Mojonnier-Dawson fillers. I don't quite understand how you could fill above the boiling point.

A. You keep the whole system under pressure and the pressure is sufficiently high to keep the gas in a liquid state.

Q. You use pressure when you use the piston type then?

A. That is right.

Q. And that lowers the boiling point?

A. In effect, yes.

862 Q. Do you know if there were any difficulties encountered with the timer of the original Mojonnier-Dawson machine in the sense of it getting moist, for example?

A. Well, it is an electronic device. It does take on moisture—

By the Court: Is that right, that lowering the pressure—

By Mr. Clement: Increasing the pressure would lower the boiling point.

By the Court: Increasing pressure lowers the boiling point, is that right?

By Mr. Clement: I gues it is the reverse.

By the Court: Well, is it? I don't know. I am not a physicist.

By Mr. Clement:

Q. Decreasing the pressure would decrease the temperature at which liquid would boil. If you go up a mountain, water boils at a lower temperature, is that correct?

A. That is right.

By the Court: Which is it? I don't know.

863 By Mr. Clement: If the pressure is decreased the boiling point is lowered.

By the Court: All right.

By Mr. Clement: That is all.

By Mr. McCanna: No redirect.

(Witness excused.)

864 By Mr. McCanna: I will call Mr. Richardson.

JACK B. RICHARDSON, called as a witness on behalf of the Plaintiff, having been first duly sworn, was examined and testified as follows:

Direct Examination by Mr. McCanna.

Q. What is your full name?

A. Jack B. Richardson.

Q. And your residence?

A. 930 Clay Street, Woodstock, Illinois.

Q. Your occupation?

A. I work for the Milk Container Equipment Corporation.

By Mr. McCanna: Your Honor, that is one of the defendants in this case, and I regard this witness as an adverse witness. I would like to have the privilege of examining him—

By Mr. Clement: I can't hear you.

By Mr. McCanna: Being an adverse witness, I would like to have the privilege of examining him rather freely.

By the Court: Do you think you are entitled to 865 call him under the statute? I don't know.

By Mr. Voland: Certainly not. He is an employee of a defendant corporation.

By the Court: What is your office, sir?

By the Witness: I have no official capacity.

By the Court: What do you do?

By the Witness: I oversee the building of these machines. But as far as an official capacity, I have none.

By Mr. McCanna: I believe we will get along.

By the Court: I will allow considerate liberality.

By Mr. McCanna:

Q. Mr. Richardson, how long have you been employed by Milk Container Equipment Corporation?

A. Well, that is since 1953, I believe, November, 1953.

Q. I believe at one time you testified in the deposition proceedings that you started with Milk Container Equipment at the time they were incorporated in September, 1953. Does that refresh your recollection?

A. Well, that could be possible, Mr. McCanna.

Q. Have you ever been employed by U. S. Carton Forming Corporation?

866 A. I was employed in November, 1952.

By the Court: Is that another defendant?

By Mr. McCanna: Yes.

By Mr. McCanna:

Q. You continued with them how long in that employment?

A. Well, until September or November, whenever I went with Milk Container.

Q. Have you ever been employed by U. S. Filler Equipment, Inc.?

A. No, I have not. I thought I did when I made my deposition, but I checked my check stubs back, and I found I have only been employed by two, U. S. Carton and Milk Container.

Q. But since November, 1952, you have been continuously employed by the first two companies?

A. That is correct.

By Mr. Kipnis: Now just a minute. I don't think that is a correct statement, your Honor.

By Mr. McCanna: Well, let's ask him.

By the Court: By one or the other, is that what you meant to ask him?

By Mr. McCanna:

Q. Continuously since November, 1952, have you
867 been employed by U. S. Carton Forming or Milk Container Equipment Corporation?

A. Yes. I was employed by U. S. Carton for a year, and then went with Milk Container.

Q. And you have never been actually employed by U. S. Filler Equipment?

A. No, I wasn't.

Q. Did you ever do any work for them?

A. Not that I know of.

Q. What kind of work did you do for these companies?

A. The U. S. Carton Forming Corporation, I set up their plant at Woodstock for the preforming of paper cartons, the boiler installation, refrigeration, and the machines for doing the work.

Q. Did you do any other type of work for them?

A. Not that I recall.

Q. Did you have anything to do or do you now have anything to do with the manufacture of this machine, Plaintiff's Exhibit 40?

A. Yes. I do.

Q. What do you do on that or what have you done?

A. Well, I have to do with part of the design and the building of it.

Q. You are thoroughly familiar with the designing
868 and building of that filling machine?

A. I believe so.

869 Q. Did U. S. Carton Forming Corporation have anything to do with the making of that, the design or building of that filling machine?

A. No, I don't believe they did.

Q. Did U. S. Filler Equipment, Inc. have anything to do with the designing or building of it?

A. Not that I know of, Mr. McCanna.

By the Court: By whom are you employed, sir?

By the Witness: U. S. Carton Forming and the Milk Container Equipment Corporation at different times. U. S. Carton Forming first.

By the Court: Let me get located here. I am getting mixed up. You are employed by whom?

By the Witness: I was employed by U. S. Carton.

By the Court: By whom are you employed now?

By the Witness: Milk Container Equipment Corporation.

By the Court: By whom of the defendants have you heretofore been employed?

870 By the Witness: That was U. S. Carton Forming Corporation.

By the Court: And U. S. Filler Equipment?

By the Witness: No, I never worked for them.

By the Court: I see. All right, is that all? Those are the only two of the defendants he has been connected with.

By Mr. McCanna: I will ask another question, your Honor.

By Mr. McCanna:

Q. Have you ever been employed by Maurice J. Brasile?

A. Yes.

Q. He is one of the defendants here?

A. Yes.

Q. What was the nature of that employment?

A. The employment by Maurice J. Brasile was with the U. S. Carton Forming Corporation and also with Milk Container.

Q. And in no way connected with U. S. Filler Equipment, Inc.?

A. I never had anything to do with him and U. S.

871 Filler.

Q. I hand you a photostat of a drawing which has been identified in your deposition as Plaintiff's Exhibit 3, and ask you to read the writing at the upper righthand corner.

A. (Reading.)

"Automatic paper bottle filler-sealer-stapler—U. S. Filler Corp. Maurice J. Brasile and Jack B. Richardson."

Q. Did you make this drawing?

A. I did.

By Mr. McCanna: Will the Reporter please mark this drawing Plaintiff's Exhibit 70 for identification?

(Thereupon said drawing was marked Plaintiff's Exhibit No. 70 for identification.)

By Mr. McCanna:

Q. Mr. Richardson, can you tell us when you made this drawing, Plaintiff's Exhibit 70 for identification?

A. I think that was sometime in December of 1952.

Q. I believe we have had a photostat of one of

872 these drawings in these proceedings that has on the back of it a date December 12 or 10, 1952, is that correct?

A. It could be.

873 By Mr. Clement: Mr. McCanna, I have the original here, if you would rather work from that. It has that date on it that you were referring to.

By Mr. McCanna: Thank you.

By Mr. McCanna:

Q. I ask you to please inspect the date on the back of this drawing—is this the original drawing you made?

A. Yes, that is.

Q. What is the notation on there?

A. December 10, 1952, "J.B.R."—that is my signature.

Q. Can you say what the condition of the drawing was when you put that date on there?

A. I don't understand you, Mr. McCanna. What do you mean "the condition"?

Q. Well, was the drawing finished or were you starting, or what?

A. Oh, no, this was just an idea.

Q. I mean, you did make the drawing?

A. Yes.

Q. I am asking you was the drawing completed just in the form that it is now at the time you put this

874 date, December 10, 1952, on it?

A. I believe so.

Q. It was completed?

A. I think so.

Q. Did you write this inscription at the top that you read a minute ago?

A. Yes, that is my writing up there.

Q. Why did you put on there "U. S. Filler Corp."?

A. Because I made that drawing for Mr. Brasile, and he was the U. S. Filler.

Q. And he employed you to make this drawing?

A. No, he asked me to. I wasn't employed by him to make it. He asked me if I would make him that suggested drawing, and I did.

Q. When he asked you to make this, what did he tell you? What kind of instructions did he give you or what instructions did he give you?

A. Pardon?

Q. What instructions did he give you?

A. He asked me—well, he didn't give me instructions. He only asked me if I knew of any way that we could make a movement to move, to open and close sealed paper cartons

and use it in conjunction with the Mojonnier filler. I did not at the time know anything about the Mojonnier filler,
875 so consequently, I went ahead and made a movement, and the only thing that I had in relation to the Mojonnier filler was a picture of one that was sent out, I believe for advertising, and that gave me the description of the tank and so forth that was on it.

By that means I went ahead and made him something that possibly could be used or drew up something in relation to it.

Q. Is the Mojonnier filler shown in this drawing?

A. No, it isn't on that, I don't believe, sir. Not that I know of. This was just the movement for advancing—oh, yes, this here is the tank shown here, but I think that is the only part of it that is shown. It is just the tank.

By Mr. McCanna: May we use this original drawing as an exhibit here to mark, and then substitute a photostat of it later?

By Mr. Clement: That is quite satisfactory, yes.

By Mr. McCanna:

Q. Now you say there is a Mojonnier filler shown on this drawing?

A. Well, the tank is shown with the element on it,
876 yes. There isn't anything else shown on it, the timer or anything. It is just the tank shown in a mounted position in relationship with a movement.

Q. What is this part I am marking "A"?

A. That is a tank.

Q. And that is also shown in the top view "A"?

A. That is correct.

Q. And what is the part I am marking "B"?

A. That is the solenoid.

Q. In the front view?

A. Yes.

Q. And the part I am marking "B" in the top view?

A. That is correct, that is a solenoid.

Q. That is a solenoid?

A. Yes, that is a solenoid also.

Q. What was that solenoid for? What was the purpose of it?

A. Well, it was for the action of the valve in the Mojonnier filler.

877 Q. So that you were sufficiently familiar with the Mojonnier filler at that time to draw in the solenoid in its proper location?

A. No. That is just as it was shown on the drawing, Mr. McCanna. I have no familiarity with the Mojonnier machine at all. I didn't even know there was actually one on the market.

Q. At the time you made this drawing?

A. No, I did not.

Q. What is this part I am marking "C" in the front view?

A. Well, it shows the valve, I imagine it is the valve shown going through the opening, through this opening on the filler (indicating)—I mean, the opening and closing.

By Mr. Clement: Will you raise your voice, please?

By the Witness: Yes.

By Mr. McCanna:

Q. Was that valve to be operated by the solenoid?

A. Yes, it was.

Q. And how was the solenoid to be operated?

A. By the present timing device that Mr. Mojonnier has on his filler.

878 Q. The electronic timer?

A. Yes.

Q. The electronic timer, is that shown on this drawing?

A. No, it isn't. I have never seen a timer other than was in the picture. It was put in there.

Q. It was the intention to use one?

A. It was the intention, yes.

Q. How did you know that, that it was intended to be used in this?

A. Well, Mr. Brasile had told me that he wanted to use it in conjunction with Mr. Mojonnier's filler.

Q. And what is this drawing in the upper center part of the main drawing which I am marking "D"?

A. That is a suggestion of a lowering valve to go into the container.

Q. Will you tell us something more about that? Did you make that drawing?

A. I did. The object of that valve, I thought, at the time was—if we could lower the valve into the container while it was going through or while—when it had come into position under the opener, at the same time the valve was being lowered, it could engage a micro and put the

879 filler in operation. That way, we would deflect the milk right down into the carton.

Q. And when you say "engage a micro," you mean a micro switch?

A. That is correct.

Q. And what would that do?

A. That would energize the solenoid and fill the carton with milk.

Q. Is that valve construction shown at D in any way similar to the valve construction shown on this machine marked Plaintiff's Exhibit 40 that I am pointing at?

A. Yes, it is.

Q. The same general principle?

A. The same principle.

Q. What is this part that I am marking "E" at the lower lefthand drawing?

A. Well, that is a shaft that was to rotate—our idea of the first one on this first drawing here was to raise by this pillow block here (indicating), under a cam, to raise the carton up underneath the filler. This was just a suggestion. We tried it out and found it wouldn't work, however.

880 Q. Will you please designate the cam, this part (indicating)?

A. Yes.

Q. That I am marking "F".

A. That's right.

Q. And that was a cam to do what?

A. Well, that cam was supposed—no, not this place here (indicating). I have the wrong one.

This is the cam right in here (indicating).

Q. The F is not the cam?

A. No. This is just a support.

Q. A bearing?

A. It is a bearing, yes.

Q. A bracket?

A. That is correct.

Q. Then what is the cam for that purpose?

A. This is the cam right here (indicating). I beg your pardon?

Q. The part that I am designating G?

A. That's right. That is correct.

881 Q. And were there any other cams on this shaft?

A. Yes. There was a cam supposedly in the back here (indicating), somewhere, set up here (indicating) that was shown—that would lower this valve. They are all

shown in more of a composite drawing, to the effect that any one of them might work. It was just an idea.

Q. Well, this part that you are pointing to which I am marking H was a cam for doing what?

A. For lowering the valve into the carton, in view of the fact that this wouldn't work (indicating). I think I have it shown through here in different places (indicating). I don't know exactly, but here was one here (indicating). No, that has nothing to do with it either, but here it is right down in here, that shows it (indicating).

Q. Mr. Richardson, this cam that we have designated H, that isn't in any way connected with this lifting or raising mechanism, is it, that you are talking about? Isn't that a cam for some other purpose?

A. Yes. I beg your pardon, Mr. McCanna. This is
882 for the stapling unit.

Q. The cam H is for the stapling unit?

A. That is for the stapling unit, yes.

Q. There is still another cam on that shaft E, is there?

A. Yes. There were three cams on there. I don't believe it is shown there.

Q. Where is the other cam?

A. I don't see it. It could be in this position here (indicating).

Q. What about this cam we have numbered G (indicating)?

A. No. That was for the first idea of raising the pedestal.

Q. Well, then, when this cam operated the machine, was the cam driven by something?

A. Yes. It was driven by a motor.

Q. An electric motor?

A. An electric motor.

Q. And did that cam shaft have anything to do with actually opening this valve, that is, the Mojonnier valve (indicating)?

A. Nothing whatsoever.

Q. Well, then, how would the Mojonnier filler be
883 used with this machine having the cam?

A. Well, the arm that—supposedly the arm that dropped the valve into the container, when it dropped, would strike a micro, which would put into effect the Mojonnier valve.

Q. Well, then, what caused the arm to come down to actuate the micro switch?

A. The cam.

Q. Well, then, the cam did enter into the—

A. Oh, yes.

Q. (Continuing.) —starting of the operation?

A. Oh, yes, if that is the way—yes.

Q. And when the micro switch was actuated, what would happen?

A. Well, then, the valve would operate.

Q. You mean open?

A. Yes.

Q. And how long would it remain open?

A. For the duration of the cycle of the time that the timer was set for.

Q. You mean the cam?

A. No.

Q. The motor?

A. The micro would engage that. The touch of the
884 micro would only put the time to the timer itself. While it was engaged, it wouldn't mean anything more than being engaged, but the time cycle of the machine was supposed to be worked out so that it would advance another carton into position to do another filling that it required time to do after the timer had filled the carton.

Q. Well, if you had the Mojonnier-Dawson filler on there with the electronic timer, wouldn't the electronic timer determine that period then?

A. No, it would not because you had, on a straight line —this straight line that we were trying to work out, you would have to have a continuous operation of a motor to keep the cartons being advanced.

885 Q. You mean the motor operated continuously?

A. Yes.

Q. And what determined the end point of the filling then?

A. The timing device on the filler would determine that.

Q. What timing device was that?

A. The Mojonnier.

Q. The Mojonnier timing device?

A. Yes.

Q. Mr. Richardson, over at the right-hand side of the corner of this drawing, Plaintiff's Exhibit 70, there are some notes and calculations. I find here the notation, "½gls." Is that gallons?

A. That is correct.

Q. And "pm."
A. It is "per minute."
Q. And "10" means—
A. The time run, 10 half gallons per minute.
Q. And "6 seconds"?
A. That would be the movement of the machine. We had set up to operate it at an interval of 6 seconds.
Q. How did you calculate that six seconds?
A. There was no calculation to it. We figured that
886 if we got 60 or 10 cycles in 60 seconds, then that was a six second movement.
Q. Didn't you say on your deposition that that information was taken from the Mojonnier-Dawson literature?
A. I don't believe so. I might have, but I don't recollect saying that, Mr. McCanna.
Q. Now, in making this drawing, Plaintiff's Exhibit 70, did Mr. Brasile give you any instructions as to what you should do?
A. Not to my knowledge, Mr. McCanna, he didn't. He just asked me to make a movement of something of some description and this was just practically a theory of my own that I came up with. I had nothing to do with him. He did not engage me for the purpose of making the machine, anyhow. He just asked me to make a movement and I put this in, actually, by myself. It is just an idea.
Q. He didn't tell you to use the Mojonnier-Dawson filler in it, did he?
A. He didn't ask me to, no, not that I recall, not at this date, no, when we first made this drawing.
Q. Did he pay you for your time in making the drawing?
887 A. No. I never was paid.
Q. You just made it on your own?
A. I did it all on my own, yes.
Q. After you made this drawing, what did you do, if anything, in furtherance of what you were working with in the making of the drawing?
A. I think a little later after this drawing was made, we started to make a model of a movement.
Q. When you say "we," who did that?
A. Well, the machinist and I, at the Botts Welding Company at Woodstock.
Q. Did you do that on your own also?
A. Practically, yes, on off time. We worked on it whenever I had time.

Q. Did Mr. Brasile have anything to do with the making of that model?

A. Yes, he did, indirectly.

Q. Well, will you explain that a little more?

A. Well, he was over there to see what we were doing and although he never made any suggestions to me, I imagine he possibly did to the machinist over there because I wasn't there all the time.

Q. Well, were you making this model for yourself?

A. No, sir. I was making it for him, for Mr.
888 Brasile.

Q. And the expense you incurred at Botts Welding Company, who paid for that?

A. Mr. Brasile.

Q. Will you tell us something about that model now, please, what it was?

A. We made—pardon?

Q. What it was. Can you describe it?

A. Well, we made a table about two foot wide, about four foot long, with a movement on it to advance bottles through an opening and closing unit and that was about as far as we got with it.

889 Q. Did you have a filler on that model?

A. We didn't actually have a filler. We had a tank mounted on it, yes.

Q. And how far did you progress with that model?

A. Well, we progressed to the extent of running water in bottles through it and seeing the action of the valve dropping into the carton and also the sealing, the stapling of the carton.

Q. Did that model have a valve operating on the principle of the one I marked D on this Exhibit 70?

A. It didn't at that time, sir.

Q. What kind of valve did you have on that filler?

A. It had a plain—well, it had a similar valve to that, inasmuch as the stem was designed possibly along the same lines as it would be in the Mojonnier filler, the same thing.

Q. And you said you ran water through the filler?

A. No, we did not run water through the filler.

Q. What did you mean, then?

A. We filled the cartons with water and pushed them through the machine.

Q. Then, as I understand it, that model had an
890 incomplete filling device?

A. That is correct.

Q. It had a valve on it but nothing to operate the valve, is that right?

A. Yes. We had a lever on it to operate the valve, to make the valve up and down, go up and down.

Q. Was that similar at all to the valve operation on this—

A. Somewhat, yes.

Q. (Continuing.) —filler marked Plaintiff's Exhibit 40?

A. Yes.

Q. What became of that model?

A. That is still around, parts of it.

Q. Is that the model that is in the jury room?

A. That is correct.

By Mr. Clement: Mr. McCanna, we would be glad to produce that model if you would like to refer to it.

By Mr. McCanna: I believe we would like to refer to it but not at the moment. I have a few more questions.

891 By Mr. Clement: Shall I arrange to have it brought in for the afternoon session?

By Mr. McCanna: Yes. That would be satisfactory.

By Mr. McCanna:

Q. I hand you a photograph and ask whether you can tell what that is.

A. That is the model, sir.

Q. That is a true picture of it?

A. Yes, that is a true picture of it.

Q. Do you know who made this photograph, who took it?

A. No, I don't. I haven't any idea.

By Mr. McCanna: Will the Reporter please mark this photograph as Plaintiff's Exhibit 71 for identification?

(Thereupon said photograph was marked Plaintiff's Exhibit No. 71 for identification.)

By the Court: Any objection?

By Mr. Clement: No objection.

By Mr. McCanna: Well, I believe I am offering it in evidence. I guess I was a little slow.

892 By the Court: It wasn't offered?

By Mr. McCanna: I am offering it now, yes.

By the Court: And there is no objection. It may be received.

(Said photograph, so offered and received in evidence, was marked PLAINTIFF'S EXHIBIT NO. 71.)

By Mr. McCanna:

Q. Mr. Richardson, in making this model of which you say the machine shown on Plaintiff's Exhibit 71 is a true picture, did you use any drawings?

A. None other than you have in that first drawing, I don't believe, Mr. McCanna.

Q. I hand you—

A. I have some sketches that were made up, but I don't believe that—unless there is some of them in there. I don't know.

Q. Well, then, let me ask this question next: How long did it take to make this model shown on the photo, Plaintiff's Exhibit 71?

A. Oh, I think we started sometime in March. I imagine it was done in June.

Q. It was finished in June?

893 A. Well, it never was finished but it was as close as it ever got to being finished, in June.

Q. I mean in the form in which it is shown in the photo.

A. That is right.

Q. In June of 1953?

A. Yes.

Q. I hand you—

By the Court: We will recess at this time until 2:00 o'clock this afternoon.

By the Marshal: This Honorable Court now stands at recess until 2:00 o'clock this afternoon.

(Whereupon at 12:30 o'clock p. m., on Thursday, May 26, 1955, a recess was taken until 2:00 o'clock p. m. of the same day.)

894 Chicago, Illinois,
Thursday, May 26, 1955,
2:00 o'clock p. m.

Court convened pursuant to a recess.

Present:

Mr. McCanna,
Mr. McKnight,
Mr. Pillote,
Mr. Allen,
Mr. Clement,
Mr. Voland,
Mr. Houghteling,
Mr. Bernat,
Mr. Kipnis,
And other Counsel.

895 And thereupon the following further proceedings were had herein:

By the Clerk: Case on trial.
By the Court: Proceed.

JACK B. RICHARDSON, called as a witness on behalf of the Plaintiff, having been previously duly sworn, resumed the stand and testified further as follows:

Direct Examination (Ctd.).

By Mr. McCanna: Your Honor, we have a deposition that we filed in this case of Mr. Richardson. I would like to have it located, please.

By Mr. McCanna:

Q. Mr. Richardson, in your testimony this morning with reference to this drawing, Plaintiff's Exhibit 70, I believe you stated that these calculations down at the bottom, or these figures at the right-hand showing the six seconds, that is what you figured out yourself, is that correct?

A. That is correct, yes, with the movement.

Q. Now in the deposition which we took, on April 15, 1955, at page 23 we asked you:

896 "Q. How did you arrive at this six seconds?"
And your answer:
"A. You mean as far as the timing element?
"Q. Yes.
"A. Mr. Mojonnier's filler gave out that information, I believe, in that respect. I didn't have it myself, but that is what I was given to understand.
"Q. You mean the Electromatic filler has the notation six seconds?
"A. We had to work towards whatever the time element was constructed in the electronic source to go along with the machine to make it operate on that capacity.
"Q. And you used the same time figures in your design that are found in the Electromatic?
"A. Whatever was given to me there, that is the figures I used. If that was the time on there, I didn't have it, no. I never had anything in regard to it. I think somebody told me that was the time."
897 Is that testimony correct?
A. That is correct, sir.
Q. I hand you a group of photostats of drawings which we had at the time of taking your deposition, and I will ask you to please examine those and state whether you know who made those drawings. I mean the original drawings.
A. The originals of these were all made by me.
By the Court: "Were all made by me," was that the answer?
By the Witness: Yes, sir.
By Mr. Voland: Please speak up, Mr. Richardson, so we can hear you over here.
By the Witness: I will.

898 By Mr. McCanna:

Q. Do you know where the original drawings are?
A. I haven't the slightest idea, Mr. McCanna. They were given to somebody, and I don't know who got them.
Q. Where were they the last time you saw them?
A. The last time that I had the originals of those was in the office of the U. S. Carton or U. S. Filler Corporation, I guess.
Q. Do you recall about when that was?
A. No, I don't.
Q. Do you know why you had the drawings at U. S. Filler?

A. I think that was at the time that Mr. Lewis was going to come into the company.

Q. Albert A. Lewis?

A. Yes.

Q. Now what company was he going to come into?

A. Well, I guess, I thought it was U. S. Carton. I couldn't—I don't know. I didn't know at that time, rather.

Q. It was in the office of U. S. Filler though?

A. Yes.

899 Q. You don't know whether he was going into U. S. Filler or U. S. Carton, is that right?

A. No, I didn't at that time, no, sir, I didn't.

Q. Then were these drawings discussed at that time?

A. No. I brought them down to show them to a patent attorney, I believe.

Q. And Mr. Lewis was interested in that, do you know?

A. I think so. I don't know.

Q. Do you know why the patent attorney was there?

A. No, I don't, other than to look at the drawings to see what we had.

Q. Will you examine these drawings carefully as to all of the dates on them and tell me whether you entered those dates that appear on the drawings and at the time they show?

A. I put the dates in there and the March—yes, March 1, '53 date in there that precedes the 7/8/53, to my recollection goes back possibly to that machine (indicating). I dated it from the time that we started to do that. I don't have any other thought as to that at all, on this one date here. The rest of them—this has a 3 date on it. This 900 has an October date in 1953. This has a 3/21/53 and also a 10/8/53.

By Mr. McCanna: Perhaps we had better identify these drawings so that we can have the record clear.

Will the Reporter please mark these drawings as Plaintiff's Exhibit 72 for identification and so on.

(Thereupon said documents were marked Plaintiff's Exhibits Nos. 72 to 79, both inclusive, for identification.)

901 Q. Mr. Richardson, when you examined the drawing, Plaintiff's Exhibit 72 and read the March 21, 1953 date, you referred to that machine. What machine were you pointing to?

A. That—I don't know what the number on that machine over there is, but that is the one I had reference to.

I think I dated everything at the time we started to work on that. I think it was in March that we started to do it.

Q. And this drawing, marked Plaintiff's Exhibit 72, is one of the drawings you made in connection with working on this model that is sitting across the room?

A. What exhibit is that? This is 33 over here (indicating).

Q. Here is the exhibit number (indicating).

A. I beg your pardon. That has something to do with this?

Q. Yes.

A. Well, it didn't at the time, no. This was brought in later, quite a bit later.

By Mr. McCanna: I wish to note, your Honor, that there has been moved into the room a machine struc-
902 ture, by Mr. Clement. May we mark that with a number?

By Mr. Clement: Defendants' Exhibit 33.

By Mr. McCanna: I believe the defendant, Mr. Clement, would like to mark this machine as his own exhibit number.

By the Court: All right.

By Mr. Clement: No. 33, I believe.

(Thereupon, said model was marked Defendants' Exhibit No. 33 for identification.)

By the Court: I observe that here is a photograph. I am reasonably sure it is in evidence. I am not sure about this one (indicating). It might be well to watch your exhibits.

By Mr. McCanna: Well, your Honor, that photograph is a duplicate. The other one has been marked 71.

By the Court: All right.

By Mr. McCanna:

Q. Mr. Richardson, I believe you testified this morning that this photograph, marked Plaintiff's Exhibit 71, is a true showing of that first model machine that you said you made?

A. That is correct.

903 Q. And does this photograph show the machine that is standing over there, marked Defendants' Exhibit 33?

A. It does, in part. This is the complete machine (indicating). That is a part of it (indicating).

Q. You mean—

A. It is not all there.

Q. That model, marked Defendants' Exhibit 33, has been dismantled to some extent?

A. That is correct.

Q. But this photograph shows the true machine?

A. That is correct, sir.

Q. Now getting back to the drawings, please examine this first drawing, Plaintiff's Exhibit 72, which bears the date March 21, 1953, and tell us what was on that drawing—what did you draw as of the date March 21, 1953?

A. I don't think I drew anything at that time, Mr. McCanna. I think I just related this date back to the time we started building that machine. This drawing wasn't made at that time, not back in March.

Q. Does that apply to all of the drawings, with reference to dates?

A. I believe so, yes, sir.

904 Q. Are there any drawings in this batch of drawings marked Plaintiff's Exhibits 72 to 79, inclusive, which were used in connection with making this model, Defendants' Exhibit 33?

A. I don't believe so, Mr. McCanna. I don't think there is a thing in here that relates to that machine at all when we started it, no, sir.

905 Q. What about this valve construction down at the lefthand side or corner of Plaintiff's Exhibit 72?

A. This valve that is in this picture is the outcome of the valve that was on that machine, which was, to my terms, an inoperative valve when we made it. It was just put there to show it could be done.

Q. I find, sitting on this model Defendants' Exhibit 33, two valve parts. Will you please tell what those are?

A. This was put in there afterwards. This part in here (indicating), that was made and the bottom seat is an insert. That was pushed up in there afterwards. Prior to the time of making this valve, all this did was go up and down (illustrating). It had a full-throated opening all the way through. This was inserted in here (indicating) when we sent it up to Detroit.

Q. Do you mean this rod, that is the valve part?

A. The rod and the bottom part of the valve was put in there.

Q. And the sleeve part?

A. No. The sleeve was there, this same sleeve was just as it was. This worked up on the barrel
906 that was there (indicating). I had this piece (indicat-

ing) made and this turn on the value here (indicating) to send it up to Detroit to show the action on it.

Q. Do you recall over what period of time you made these drawings, Plaintiff's Exhibits 72 to 79?

A. Could I see those, Mr. McCanna? I don't—you mean all of these or—

Q. Yes, all of them. Over what period of time?

A. Oh, a couple of months, I should judge. Back from the date that was in there—probably June or July. I don't think I got into it until that time. I don't think it was until July, in fact, possibly in July or August before we started to do anything at all.

Q. In the meantime, though, you had this made Defendant's Exhibit 33?

A. That is right. That's as far as we had gone.

Q. And then the drawings were made in several months, into July and August, is that right?

A. It could have been in July or August, up to that time, because I think we completed one later for an-
907 other model. That was up in September sometime before we got one completed again.

By Mr. Clement: What year was that, please?

By the Witness: In '53.

By Mr. McCanna:

Q. Who were you working for when you made these drawings?

A. I was working for Mr. Brasile.

908 Q. Did he pay you for making the drawings?

A. No, he did not.

Q. Well, over this several months that you made these drawings, were you just contributing your time, was that it?

A. I was trying to develop a machine for him, yes, sir.

Q. Well, then, the drawings were actually being made for his benefit, is that correct?

A. That is true.

Q. Did you ever consider that in making these drawings, you were being compensated by the companies in your salary or wages which were paid from these companies Mr. Brasile had at that time?

A. I thought it probably would pay off, yes, sir.

Q. In other words, what you were being paid by U. S. Carton or U. S. Filler was compensating you for the efforts you were putting into these drawings?

A. No, I don't believe so. I was doing this on my own, outside of the work I was doing for them.

Q. Purely for—

By Mr. Kipnis: If your Honor please, there is no testimony that this witness was paid by U. S. Carton, as
909 I remember it. It is a misstatement.

By Mr. McCanna: Well, as I understood the witness' testimony when we started out he was being employed and paid by U. S. Carton and U. S. Filler was not the one that was paying him.

By Mr. Kipnis: I am sorry.

By Mr. McCanna: It is just the reverse.

By Mr. Kipnis: That's right.

By Mr. McCanna:

Q. I notice on this drawing, Plaintiff's Exhibit 72, the date July 8, 1953. What was the condition of the drawing at that time?

A. Well, I believe that is the time that this was actually made.

Q. That you made that drawing?

A. Yes.

Q. Now what does this drawing show? Will you describe briefly what that is?

A. Well, it shows a reverse part of the valve and a float valve and a tank. There are no dimensions, however, given, or anything.

Q. Does the machine over there (indicating), Defendants' Exhibit 33, have a float valve in the tank?

910 A. You mean this old machine that is sitting over there?

Q. Yes.

A. No. We had never tried the valve or anything out on it at all.

Q. Where did you get the idea of putting a float valve in this tank?

A. Well, that is common knowledge, to know that you have to control float. You have to have a float control in a tank to keep the tank from overflowing.

Q. Mr. Brasile didn't tell you to put that in, though?

A. No, sir.

Q. Is that the only reason you drew that float valve in?

A. No, I don't believe so. At that time we were—when we were trying to develop this type of valve, we had to have a float valve to compensate for the amount of

milk going out of the tank, so that is why that was developed, I think.

Q. What machine did you use that in?

A. This—

Q. I mean, the float, to compensate for the milk that was being taken out?

A. Thas was on the second machine that we sent
911 up to Detroit for testing.

Q. Oh, well, I guess—

A. (Continuing.) That was late in 1953.

912 Q. Well, we will come to that later. Now I will ask at this time whether this machine, Defendants' Exhibit 33, was ever demonstrated to anybody, if you know?

A. The filler part of it, to my knowledge, was never demonstrated. The mechanical part of it, as far as moving the cartons through the machine, that was demonstrated, yes.

Q. Well, when you say "the filler part was never demonstrated," why was that?

A. Because the—well, it wasn't made to work. That was all that was to it. It wasn't operating to any degree knowing what to do. It was just there to show what could be done.

Q. Who was this machine demonstrated to, if you know?

A. Well, it was demonstrated at one time to some people from the Ex-Cell-O Corporation.

Q. Do you know who they were? Were you there when it was demonstrated?

A. Yes, I was there. It was Mr. Bixby, I think his name is, Bixby. I am not too good on names, but, Mr. Bixby, I think he is president.

Q. President of Ex-Cell-O?

913 A. Yes, and there was a Mr. Andre and Mr. Scott.

Q. Is Mr. Scott the vice president, do you know?

A. No, I don't know what he was.

Q. Mr. Andre was an engineer?

A. He was the engineer, yes. Mr. Scott, I think he was sales or something. And then there was a Mr. Paul Culver, I believe, was there.

Q. And what happened at that demonstration so far as demonstrating the machine was concerned?

A. Well, it wasn't too good of a demonstration. I don't believe. That is, to my way of thinking, it wasn't.

but they were interested enough in the machine that they wanted it sent to Detroit.

Q. Do you recall when that demonstration was made, about?

A. I think I testified to that, that it was in June, but that's merely from thinking. I couldn't tell you exactly, Mr. McCanna.

Q. Nineteen—

A. 53.

Q. 1953?

A. Yes.

Q. Do you recall any other demonstrations of this machine?

914 A. Yes. There was one demonstration to Mr. Brooks and Mr. Allen. There were several other people there, but I wouldn't know who they were. I wasn't there long enough to know who they were.

Q. Where was that demonstration made?

A. That was made at the U. S. Filler office at Woodstock.

Q. And do you know who Mr. Brooks was?

A. Well, I knew that he was a dealer in milk machinery. Outside of that, I didn't know Mr. Brooks, no.

915 Q. You didn't know that he was probably the largest jobber that Mr. Brasile had under his contract with—

A. No, I did not, sir.

Q. (Continuing.) —with Mojonnier-Dawson?

A. No, I did not.

Q. Do you recall whether Mr. Brooks had with him at that demonstration a group of his salesmen?

A. Yes, I understood they were.

Q. Six, seven or eight?

A. Yes, there were quite a few there.

Q. Do you recall about when that demonstration was made?

A. That was possibly in or around the same time.

Q. You don't recall which came first?

A. No, I don't.

Q. And what demonstration was made to the Brooks group?

A. Well, on that demonstration we filled the cartons with water and showed the operation of them going through the machine. While we were demonstrating it broke down, and that ceased the showing of what it would do.

Q. You didn't put any water in the tank?

A. No, we did not, sir.

916 Q. That is because the tank was incomplete, is that right?

A. The tank was incomplete and there wasn't any seat in the valve, so we couldn't have held anything in it in the first place.

Q. At that time did you explain anything to these men, Mr. Brooks and the others, as to how the filler was to operate?

A. I don't believe I did any explaining to anybody, Mr. McCanna.

Q. Now what was done with this machine after these demonstrations, if you know?

A. Well, it went to Detroit right after that.

Q. You mean, Mr. Brasile sent it up there, or what?

A. I believe so.

Q. Did you have anything to do with the machine while it was up in Detroit?

A. I went up to Detroit at a later date, after they had tried it out for themselves.

Q. By reference to Detroit, do you mean to—

A. To the Ex-Cell-O Corporation.

Q. That is their main office and plant up there, is that correct?

A. Yes, it is.

917 Q. And they are the ones that make these Pure-Pak preforming machines and the Pure-Pak cartons?

A. Well, they make the machines, yes, sir.

Q. And the machines make the cartons?

A. Yes, that is correct.

Q. Was the machine when it was sent up there in the same general condition that you have testified to—I mean, an incomplete machine?

A. I thought so.

Q. But when you arrived up there, you saw the machine?

A. Yes.

Q. This photograph, Plaintiff's Exhibit 71, is the machine you saw there?

A. That is right, sir.

Q. When you were at Ex-Cell-O, what was your purpose of going there?

A. They asked me to come up there to sit down and talk with them about what they could do with the machine

or what they couldn't do with it. That was my purpose in going up there.

Q. What did they tell you, if you recall?

A. I don't recall what they told me, but I think there was a little bit of everything wrong with it, and I was very surprised myself that it would perform like it
918 did for them.

Q. Did they tell you that they had operated the machine?

A. Yes, they had operated it, yes.

Q. What did they tell you?

A. Pardon?

Q. What did they tell you?

A. I don't recall in so many words.

919 Q. I mean, just in substance, what did they tell you?

A. Well, just that it wasn't very consistent; that the load on the machine, when the cartons were filled, slowed the action, and that there would be several things that could be refined and changed and done in one shape or other to make it better, or a better machine.

Q. When you refer to the cartons were filled, they actually operated the machine for filling cartons?

A. They did, yes.

Q. If that is the case, then, there must have been some change in the machine from the time you saw it back in Woodstock to the time they received it, is that correct?

A. No, there wasn't any change. They had—I had set it up just the way that I had related to you, and they had hooked up a temporary valve in there, a float valve of some description, and they had used the filling device, something that we had never done. It was gratifying to me to know that the darned thing would work because I didn't think it would.

920 Q. Will you come over, please, and inspect this machine and show us if there is any indication of where they hooked up the float valve?

(The witness stepped down from the witness stand.)

By the Witness:

A. Oh, no, there isn't any on there. That would be from the outside that they hooked it, Mr. McCanna.

By Mr. McCanna:

Q. They suspended it from the outside?

A. Suspended it or possibly fastened it on. I don't

know how they fastened it on because I didn't see it when I was there. They evidently had put it on there with a "C" clamp or something. They didn't run—yes, they did run water, and I thought they had run soluble oil through it, but I think that was the last machine, not this one.

Q. Will you please inspect the tank, Defendants' Exhibit 33 and see if you can see any signs of where they put a float mechanism on that?

A. No, I don't see any on there at all.

Q. Would you look at the inside as well as the outside?

A. I know there isn't anything in there. I doubt
921 that very much.

Q. You said they might have fastened it with "C" clamps?

A. Well, that would be up here (indicating). That is the "C" clamp.

Q. Now a minute ago you told us that this machine didn't have all the valve parts that were necessary for a filling operation. Doesn't this photograph show a complete construction so far as that is concerned?

A. No, it does not. As I explained to you, on this valve, there was no seat in that valve in this picture.

Q. Will you please take the stand?

(The witness resumed the witness stand.)

By Mr. McCanna:

Q. Now calling your attention to the photograph, Plaintiff's Exhibit 71, what is the part that is marked in ink "C"?

By Mr. McCanna: If your Honor please, this isn't marked. These marks were put on at the time of taking the deposition.

By the Court: Yes.

922 By the Witness:

A. This part that you are pointing to right now is the sleeve of the valve.

By Mr. McCanna:

Q. And what is the part marked "D"?

A. That is the arm that moves the valve up and down or the lever.

Q. Corresponding with the lever arm that is on your U. S. Filler machine, marked—

A. Similar to that, yes.

By Mr. Kipnis: I object. That is not a U. S. Filler machine.

923 By Mr. McCanna: He has testified in this case, I think, that it is.

By Mr. McCanna:

Q. What do you call that machine over there at the left?

A. That one at the left is an MJSA.

Q. You never used the expression "U. S. Filler" referring to that machine?

A. I don't believe so, other than on the drawings, I think I have. On some of the drawings I put "U. S. Filler" just for common knowledge that it was being made for them.

Q. Now, Mr. Richardson, I am going to mark this part "X". What was the function of that part in this machine?

A. That was to move the valve up and down into the carton from a cam that is in the rear of that machine. That was a long stem that went up the back there that moved the shaft. It is still in there—yes, it is still back there. That is the shaft right there shown in the back.

Q. Is that cam shown on this photograph?

A. No, it is right in the back of this plate here. It is in the machine itself.

924 Q. That is on the cam shaft that is driven by the electric motor?

A. No—yes, yes, it is on another cam shaft that is driven off at an angle.

Q. So that when the electric motor operated and the cam revolved, what would happen?

A. This valve would go up and down as the cycle of the shaft turned.

Q. Corresponding to the timing of the cam and the motor?

A. That is correct; that is correct.

Q. And what would that do to the valve?

A. That would move the valve up and down, too, at the same time.

Q. You mean to open and close the valve?

A. No, not this one it didn't. It just dropped the valve down into the machine, but when Ex-Cell-O had it, it would open and close the valve, yes.

Q. Yes, that is what I mean.

A. Yes.

Q. While you were at Ex-Cell-O, was any report made of the tests of this machine?

A. Yes, they made a written report.

Q. I hand you a two-page paper, and ask you if you
925 can identify that.

A. Yes, sir.

Q. What is it?

A. It is the report from the Ex-Cell-O Corporation as to the machine in general and the running of cartons through the filling device.

Q. Is this the original report, if you know?

A. No, I don't believe this is. I don't think this is the original, no.

Q. Whose signatures do you find on the second page?

A. That is mine and Mr. Earp's. I don't know whether that is the original or not. It could be.

Q. Isn't that original typing on these two sheets?

A. I guess it is, sir. Yes, it is.

Q. And aren't those original inked signatures?

A. Yes, sir, that is right. Correct.

Q. And you signed this report along with Mr. Earp on the date appearing here, July 2, 1953?

A. That is correct.

By Mr. McCanna: Will the reporter please mark this Plaintiff's Exhibit 80 for identification?

(Thereupon said document was marked Plaintiff's Exhibit No. 80 for identification.)

926 By Mr. McCanna: I offer this report in evidence as Plaintiff's Exhibit 80.

By Mr. Clement: No objection.

By the Court: It may be received.

(Said document, so offered and received in evidence, was marked PLAINTIFF'S EXHIBIT NO. 80.)

By Mr. McCanna:

Q. Mr. Richardson, I believe you have testified that this machine to which this report refers was being made back there in Woodstock by you under Mr. Brasile's direction, is that correct?

A. That is correct, sir.

927 Q. And over a period of some months—actually it was the outgrowth of that original drawing on December 10, 1952, isn't that correct?

A. Yes, that is right.

Q. So that you were some seven months in the process of developing this or making drawings and having it made? I mean from December 10, 1952, until this July date or June?

A. Well, that is quite possible, yes, sir.

Q. And in that period you never sought to complete the valve construction to see whether the filler would actually fill?

A. No, sir, I never did. I never had any occasion to do it.

Q. Were you so sure that it would operate correctly?

A. No, sir, I certainly was not. I didn't think that type of valve would operate, and the reason I didn't do it was because Mr. Brasile had told me that to all intents and purposes we were going to use Mr. Mojonnier's filler in cooperation with this device, this moving device.

Q. Why didn't you just put a Mojonnier filler on there then?

928 A. I didn't have any.

Q. Mr. Brasile had plenty of them, didn't he? He was the sole distributor.

A. I had never seen one while I was there, no, sir. If he had them, why, I never saw them.

Q. You mean all the time you were there, you never saw one of the Mojonnier fillers?

A. The only time I saw a Mojonnier filler was when it came in in a crate and was shipped out again. I never saw one, no, sir.

Q. But when this machine, Defendants' Exhibit 33, was sent up to Ex-Cell-O, that was for the purpose of interesting them in manufacturing the machine, was it?

A. Well, not from my standpoint. It was just to see what would happen, what could be done with it. I don't know what anybody else's idea was about it, sir.

Q. Will you please read the caption on this report, Plaintiff's Exhibit 80?

A. (Reading:)

"Comment On U. S. Filler Corporation Semi-Automatic Filler."

Q. Will you please read the first two sentences?

929 "This machine, in its present form, is a means of demonstrating the operations required to open, fill, close, and seal a preformed Pure-Pak container. Its straight line construction makes it very difficult for one man to operate. Even with—"

Q. Just a moment.

A. Pardon me?

Q. All right. Go ahead.

A. (Reading:)

"Even with a driven accumulating table it would be necessary to stop loading while packing the accumulated containers. No consideration has been given to sanitation or appearance."

Q. Now the third paragraph, will you please read that?

A. (Reading:)

"The container is then indexed under the filling unit, which operates on a time cycle determined by the machine cycle. It has a poppet type valve which is opened and closed by a cam."

930 Q. Will you continue, please?

A. (Reading:)

"The machine would run twice the speed of one half gallons on quarts. The pints and one half pints will require a compound cam or different cams to operate on the quart cycle. There may be a problem of eliminating foam due to the filler valve construction."

Q. Now will you please read the following paragraph?

A. (Reading:)

"The following tests were run on the one half gallon cycle in groups of two to be sure that the second container was run with the machine cycle. If more containers are run the machine will slow down due to additional work of closing and moving filled containers. There was a constant head of approximately five gallons of water in the tank."

931 Q. I see that on this report there follows a series of figures. Are those figures that say "First group," what are they? What do they designate, if you know?

A. I am under the impression they were the first group of cartons that they run and that was—they use glass measurers up there with the measure calibrated to ccs., and I imagine that was the differential in the fill.

Q. You mean when they operated the machine, they just ran two cartons through at a time, and then measured, and then ran two more cartons through?

A. Well, that is the way it appears here. I don't know whether they did that. I didn't see it.

Q. These tests are numbered 1 and 2, aren't they?

A. Yes.

Q. As the first group?

A. Yes.

Q. And numbered 3 and 4 as the second group?

A. That is right.

Q. Now on the 1 and 2, what were the cc. tests?

A. Well, there was 1780 and 1720. That was a variation of 60.

Q 60 ccs.?

A. That is correct.

932 Q. What does that represent in ounces?

A. Oh, 64 ccs. to the ounce, I believe. That is possibly close to an ounce of milk.

Q. When we asked you that same question on your deposition, didn't you say "Ask Mr. Mojonnier and he will tell you"?

A. That is correct. I didn't know at that time because I can't keep those things in my mind. I don't have that technical knowledge.

Q. Isn't that about a two ounce differential there?

A. Well, it could be.

Q. And what is the requirement in the trade as to the minimum variation in filling accuracy of these cartons?

A. I think it is 20 ccs. on a half gallon and 10 on a quart. That is what I have been given to understand.

Q. In ounces, assuming that ½ ounce is the variable that is considered O. K., this test would be pretty far out of line, wouldn't it?

A. Oh, yes, definitely.

Q. Do you know what was done with this machine, Defendants' Exhibit 33, after that test was made at Ex-Cell-O?

933 A. It was sent back to Woodstock.

Q. And you carried this report back to Woodstock?

A. That is right.

Q. To whom did you give that report?

A. I gave it to Mr. Brasile.

Q. Did you say anything to Mr. Brasile when you reported this?

A. Well, I think the only thing that I said to him, if I remember correctly, was the fact that it worked. I didn't have the slightest idea that it would do what it did in its form, as rough at it was. Outside of that I don't think we discussed it very much.

Q. Did you do anything further in connection with this machine?

A. No, sir, we never did anything further with that. That is as far as it got.

Q. That machine then had its end right there?

A. We still kept it, but we didn't do anything further with it, that is right.

Q. Did you do anything further in connection with making a filling machine?

A. Along about in August or September we started to build the machine that we have here now, the present one, the MJSA. That is, we started to make drawings and
934 get stuff together for it.

Q. That is this machine marked Plaintiff's Exhibit 40?

A. That is right.

Q. You started to make that when?

A. We didn't start to make it. We started to get parts assembled for it. I think it was along about in September.

Q. 1953?

A. 1953, yes, because before we ever started to make that filler, we made one unit that we took up to Ex-Cell-O. I think that was in September.

Q. Then it was something that preceded this particular machine, the commercial machine?

A. Along the same lines.

Q. Tell us about that, please.

A. Well, it consisted of the tank you see, No. 14, I think it is—isn't it?

Q. Yes.

A. Plus the valve and—

Q. The same valve construction that is shown on Exhibit 40?

A. That is correct, and the solenoid operation. The whole thing as you see it there, wth the timer on it,
935 less the head and the stapling device and the heater.

Q. That was the next thing you made?

A. Yes.

Q. And were these drawings, marked Plaintiff's Exhibits 72 to 79, used in making that unit?

A. Yes, sir, they were. These were used.

Q. These were started though a long time before you made any?

A. No, they weren't, Mr. McCanna. These drawings were started, yes, prior to that time but this date, as I say on this date, on this 3, it goes back to when we started that machine, and I think I dated everything back to that time, though we did not have anything in this line developed or anything worked up on it at all, not a thing.

936 Q. When?

A. In March.

Q. All right.

A. Because I hadn't any way of working with it. I didn't have anything to do with this. We didn't have any idea of building a tank or float or anything else of that construction at that time.

Q. But after the machine, Defendants' Exhibit 33, came back from Ex-Cell-O, you did start?

A. That's right, sir.

Q. And that is when you made these drawings?

A. That is when those drawings must have been made, around at that time.

Q. This drawing, this has the float in it and the construction, this construction was actually the construction that was used in this unit that you said you next made?

A. Right.

Q. That is dated July 8, 1953?

A. That is right. That is just about the time that we started to work on it.

Q. Well, this July date, the July 8th date is just a few days after the report of Ex-Cell-O, then, is that correct, of July 2nd?

937 A. It is after I came back from Detroit.

Q. And you immediately started to make this drawing, is that correct?

A. I believe so.

Q. And you made all those drawings then after that period, is that right?

A. Well, now, all of those drawings of the tank and the valve, I believe so, yes, sir, I think so.

Q. Well, this is quite a departure, these drawings, Plaintiff's Exhibit 72, from the construction that is in that model, Defendants' Exhibit 33, isn't it?

A. I don't just understand you, Mr. McCanna.

Q. Well, isn't it quite a departure? You said there was no filling control in that machine, Defendants' Exhibit 33.

A. That is correct.

Q. Well, what was this drawing, Plaintiff's Exhibit 72, intended to provide? Will you please describe what you had in mind in making this drawing?

A. In this drawing here (indicating)?

Q. Yes.

A. The idea in this drawing was after I came back

938 from Detroit, seeing that the valve didn't work up there with some consistency, that it was not too good, but with some refinements, it could be made to work, so that was the outcome of it and this was the drawing pertaining to that.

Q. And so you just sat down and made this drawing, is that correct?

A. I believe so. I made sketches first of different things and came up with this.

Q. When you say "different things," were there calculations that entered into that?

A. No, I had no calculations. Everything I had done with regard to this was done by guess and by God. If it worked, all right; if it didn't, well, I would try something else.

Q. Now this unit that you said you made after you came back from Detroit, with the electronic timer on it and the float control, corresponding with Plaintiff's Exhibit 72 and the drawings in this group, under whose instructions did you make that unit?

A. Mr. Brasile.

Q. And where was that unit made?

A. That machine was made on McHenry Avenue in
939 Woodstock.

Q. Is that a place of business?

A. Yes. That is the Milk Container Equipment business building.

Q. Is that another corporation of Mr. Brasile's?

A. Well, that is the one that I worked for then, yes.

Q. Well, you made this unit then at the Milk Container Equipment place of business, is that correct?

A. Yes.

Q. Did you make any drawings showing the assembly of the parts that went to make up that unit?

A. No, I don't believe so, not at that time.

940 Q. I hand you a photostat of a drawing.

By Mr. McCanna: Does counsel have the original of this drawing?

By Mr. Clement: Here it is, Mr. McCanna.

(Handing document to counsel.)

By Mr. McCanna:

Q. I hand you a drawing which your counsel has furnished me very kindly.

A. Yes.

Q. And I ask you whether you can identify that.
A. Yes. I made this drawing.
Q. Do you know about when you made that?
A. No. I haven't the slightest idea. That was made sometime or—it must have been in the fall of 1953 because we hadn't got to our hydraulic unit yet and we hadn't got to making—we didn't have a stapler in its true form and the only thing that we have in there is the timer and the heater—I mean, the timer and the tank as it went up to Detroit, so it must have been along in the fall sometime when I made this.
By Mr. McCanna: Will the reporter please mark this as Plaintiff's Exhibit 81 for identification?
941 (Thereupon said document was marked Plaintiff's Exhibit No. 81 for identification.)
By Mr. McCanna: I offer this drawing in evidence as Plaintiff's Exhibit 81 and would you care to substitute a photostat of it afterwards or—
By Mr. Clement: No objection. Yes.
By the Court: It is offered and there is no objection?
By Mr. Clement: That is right, your Honor.
By the Court: It may be received.
(Said document, so offered and received in evidence, was marked PLAINTIFF'S EXHIBIT NO. 81.)

By Mr. McCanna:

Q. Now the unit that you talked about that you sent up to Detroit to Ex-Cell-O, following the return of this Defendants' Exhibit 33, did that have any construction corresponding to what is shown on this drawing marked Plaintiff's Exhibit 81?
A. Yes. It had the tank, the valve construction, the solenoid, the posts in the back, the post to hold the timer solenoid and also the timer and a plate to
942 hold it on. I took it up in my car.
Q. Did it have the float valve construction?
A. It had the float valve.
Q. Made in accordance with these drawings that we have been talking about?
A. That is right. It had the pilot valve that was made.
Q. And was that assembled on a table or something?
A. They assembled it on a table that I took up with me after I got to Detroit to Ex-Cell-O Corporation.
Q. Oh, you assembled it up there?
A. Yes.

Q. Was that a completely operative construction?
A. Yes, the valve was.
Q. Well, I mean, did the parts work together to actually fill the cartons?
A. Yes, they did.
Q. And you hadn't done any filling with that down at Woodstock?
A. Oh, yes, we had. We had run—prior to the time we took it up there, we had run water samples through there to get our correct timing and so on for that.
Q. And is the construction shown in this drawing, Plaintiff's Exhibit 81, the same as the construction,
943 so far as the filler unit is concerned, the same as what is on Plaintiff's Exhibit 40 over there (indicating)?
A. Which is 40, Mr. McCanna?
Q. The one on the left.
A. Yes, yes.
Q. It was that same construction?
A. Yes. The only difference, I believe, so far as the construction, you might say, so far as the construction—that is a manufactured tank we have on there now and the one I took up to Detroit was a 10-gallon stock pot.
Q. And what is the difference in capacity between that 10-gallon stock pot and the tank 14 on Plaintiff's Exhibit 40?
A. There isn't much difference at all.
944 Q. Now what happened to this filler that you are just telling about, up at Ex-Cell-O, if you know?
A. We still have the pots around for it.
Q. What happened up at Detroit?
A. They ran a test on it for us.
Q. Were you present when those tests were run?
A. Yes, I was.
Q. I hand you a two-page paper and ask if you can identify that.
A. I can.
Q. What is that?
A. It is the Ex-Cell-O Corporation—from Mr. Monroe, Andre, Krengel and Wills, pertaining to U. S. Carton Forming Company filler.
By Mr. McCanna: I believe your Honor will find a copy of this in that bound-up—
By the Court: This? This package, you mean?
By Mr. McCanna: I though it was, unless I am mistaken. It must have been removed from there.

That is a photostatic copy. (Handing document to the Court.)

945 By Mr. McCanna:

Q. To whom is this writing addressed?
A. U. S. Carton Forming Company filler.

Q. And it is dated?
A. September 30, 1953.

Q. From—
A. Pure-Pak Engineering, Ex-Cell-O Corporation.

Q. Will you please read the first paragraph?
A. (Reading):

"The following tests were run by Jack Wills and I on 9/28/53 using the U. S. Carton Forming electrically timed filler. We were trying to determine if a variable load on the same line as the timer would affect the fill.

"Test No. 1 was run without any other load on the line.

"Test No. 2 was run with a 'MT' machine running with power from the same outlet. No other changes made."

Q. And this signature on that report is by—
A. Mr. J. F. Earp.

Q. That is an original signature?
A. Yes, it is.

946 Q. And attached to that is what?
A. (Reading.)

"These were the tests that were run for the following—" Or rather:

"The following is the result of tests run by Mr. Jack Richardson of U. S. Carton Forming Company on 9/25/53, using their electrically timed filler and it gives the variations for the half gallon, quart and pint."

And this is there in measures.

By Mr. McCanna: Will the Reporter please mark this two-page paper identified by the witness as Plaintiff's Exhibit 82 for identification?

(Thereupon said document was marked Plaintiff's Exhibit No. 82 for identification.)

By Mr. McCanna: I offer this into evidence.

By Mr. Clement: No objection, your Honor.

By the Court: It may be received.

947 (Said document, so offered and received in evidence, was marked PLAINTIFF'S EXHIBIT NO. 82.)

By Mr. McCanna:

Q. What became of this electronic filler that you took up to Ex-Cell-O after you made the tests?

A. We still have the parts of it around, I believe, somewhere.

948 Q. Did you take it back with you to Woodstock?

A. Yes, I brought it back with me.

Q. What was your purpose in going up to Detroit with that filler?

A. To find out whether it would work, whether it was right or not. They had the means of testing it or doing something with it to show that it was right or wrong. That is the only reason that I took it up there.

Q. Is that the only reason you were taking it up there?

A. My reason, yes, sir.

Q. Did you go up there on your own or did someone instruct you to go up there?

A. Oh, no. I went up there for Mr. Brasile, in regard to it, yes.

Q. He told you to take it up there?

A. Yes.

Q. Did he tell you anything else?

A. I don't—

Q. About the purpose of taking the filler up there?

A. No, he didn't, Mr. McCanna.

Q. You had no idea as to why you were taking it up there except they were going to test it?

949 A. That is correct, sir.

Q. I hand you a letter on the letterhead of Milk Container Equipment Corp., Woodstock, Illinois, dated October 15, 1953, addressed to Ex-Cell-O Corporation, Pure-Pak Division, Detroit, the attention of Mr. Andre, and ask you if you can identify that.

A. Yes, sir. I wrote this letter to Mr. Andre.

Q. And why did you write that?

A. Mr. Brasile asked me to send him a drawing of what we had.

Q. Will you please read into the record what that letter says?

A. (Reading):

"Ex-Cell-O Corporation,
"Pure-Pak Division,
"14310 Hamilton Avenue,
"Detroit, Michigan.

"Attention: Mr. E. R. Andre.

"Dear Gene:

"I am sending you a complete set of prints for both valves and tank fittings. Morrie will write you in regard to them.

"Best regards.

"I am very truly yours,
950 "Milk Container Equipment Corp.
"J. B. Richardson."

"October 23, 1953," is the date it was received, I think.

By Mr. McCanna: Will the reporter please mark this letter Plaintiff's Exhibit 83 for identification?

(Thereupon said document was marked Plaintiff's Exhibit 83 for identification.)

By Mr. McCanna: I believe counsel has seen it.

I offer this letter in evidence as Plaintiff's Exhibit 83.

By the Court: It may be received.

(Said document, so offered and received in evidence, was marked PLAINTIFF'S EXHIBIT NO. 83.)

By Mr. McCanna:

Q. Do you recall what prints you sent along with this letter?

A. No, I don't recall them very well, Mr. McCanna, but if these were the ones that were received by them,
951 they are the ones I sent to them. I imagine they were this complete set, yes.

Q. That is a set of eight prints and I am just asking what you know about this, whether those were the complete set of prints for valves and tank fittings that you sent up.

A. Yes, they must have been.

Q. These are the prints marked Plaintiff's Exhibits 72 to 79, inclusive.

A. Yes. Those were the figures on there.

Q. And why did you send these prints to Mr. Andre?

A. I think he asked for them and Mr. Brasile had told me to send them to him.

Q. Do you know who paid your expenses on that trip up to Detroit on this occasion?

A. Mr. Brasile did.

Q. Personally?

A. Yes, sir.

Q. And he also paid your expenses personally on the earlier trip that you made up there?

A. I believe so. I couldn't tell you that offhand. I turned my expenses in to him.

Q. Were you paid by check on those expense items?

A. No, sir, I was given cash.

952 Q. Both times?

A. Yes.

953 Q. Who were you working for on October 15, 1953, when you sent this set of six prints up, or eight prints up to Ex-Cell-O?

A. In October, 1953, I was working for—other than doing that type of work, that was done outside, but during the day, I was working for the U. S. Carton Forming Corporation.

Q. But you were using Milk Container Equipment Corporation stationary?

A. That is right.

Q. You went into their office and—

A. Well, I was there.

Q. Well, are they located in the same place?

A. That is correct.

Q. Oh, you mean, U. S. Carton and Milk Container Equipment had the same location?

A. No. I thought you said U. S. Filler. I didn't—what stationery is that on? Whatever stationery is available, I use. I don't know what the stationery was.

Q. Well, this was written, this letter marked Plaintiff's Exhibit 83, was written on the letterhead of Milk Container Euipment Corporation.

A. Yes.

954 Q. How did you happen to get a hold of that?

A. Well, that company must have been in existence at that time when I wrote it, that's all. It was whatever was available and that was it.

Q. It is still one of Mr. Brasile's companies?

A. Yes, sir.

Q. And it was just a matter of convenience, from time to time, as to what stationery you used or, in matters of this kind—

A. I suppose if you put it that way, yes, sir.

Q. Now, this letter says, and you are writing this—it says:

"Morrie will write you in regard to them."

Do you know whether he wrote to Ex-Cell-O?

A. No, I wouldn't have any idea, Mr. McCanna.

Q. I hand you a carbon of a letter dated October 26, 1953, addressed to Mr. J. Richardson, U. S. Carton Forming Corp., and ask whether you can identify that?

A. Yes. This letter was sent to me from Mr. Andre in the Pure-Pak Division.

Q. This carbon copy contains an original signature. Whose signature is that?

955 A. That is Mr. Andre.

Q. Will you please read the body of the letter?

A. (Reading):

"This will acknowledge receipt of the eight blueprints which you sent us showing the details necessary for the timed filler you brought to Detroit a few weeks ago. Charlie Monroe is taking a look at these to see if he has any thoughts on simplification of the design in order to cut the expense. As soon as he is finished with them, we are going to pass the prints along to our Estimating Department. When we receive a price from them, we will let you know.

"It was nice seeing you the other day and thanks again for sending the prints.

"Kindest regards,

"Ex-Cell-O Corporation."

Q. Do you know what became of this matter after this letter of October 26, 1953?

A. No, sir, I don't. I think there wasn't anything 956 done about it, to my knowledge. I never heard any more about it, I don't believe.

Q. Did you give this letter to anybody, this letter of October 26th?

A. It is possible that it was sent with another letter and I gave it to Mr. Brasile.

Q. And that is the last you heard of the matter?

A. Yes.

By Mr. McCanna: Will the Reporter please mark this letter Plaintiff's Exhibit 84 for identification?

(Thereupon said document was marked Plaintiff's Exhibit 84 for identification.)

By Mr. McCanna: I offer this carbon, original carbon of the letter, in evidence as Plaintiff's Exhibit 84.

By Mr. Clement: No objection.

By the Court: It may be received.

(Said document, so offered and received in evidence, was marked PLAINTIFF'S EXHIBIT NO. 84.)

By the Court: Take a short recess.

(Whereupon a short recess was taken.)

957 By The Court: Proceed.

By Mr. McCanna:

Q. I hand you a photograph and ask whether you can identify that or whether you have ever seen that before.

A. I have seen the photograph, yes, sir.

Q. Where did you see that?

A. I saw it in one of the offices at Woodstock, probably the Milk Container Equipment Corporation.

Q. Why do you say "probably"? Are you sure?

A. Well, I don't—the machine doesn't mean anything to me, sir.

Q. What is it?

A. It is an artist's conception, I think, of a filler, probably taken off of that (indicating). The way it looks as if it is taken off of that old machine there.

Q. Defendants' Exhibit 33?

A. Is that it?

Q. The machine over at the right?

A. Yes, to the right, yes.

Q. And that machine at the right is shown on this photograph, Plaintiff's Exhibit 71?

A. Yes.

Q. Now you say this photograph that I just handed
958 you is an artist's conception?

A. Well, I believe so. I never—

Q. Where do you get that idea?

A. Well, it doesn't have any relation to any machine other than the top of that there. That is the only thing I can see that it looks like, this one bar going through here and the two stapling units and the valves that push it along. I don't see anything else that relates to it. It is all covered up.

Q. I thought you said you saw this same photograph?

A. Yes, I have seen the photograph.

Q. Before, at one of Mr. Brasile's companies?

A. Yes.

Q. This copy that I am handing you is a print from some negative, and I take it that the photoprint that you saw was off the same negative?

A. I imagine it was, sir, yes.

Q. You recognize this?

A. Yes, I recognize the picture.

By Mr. McCanna: Will the reporter please mark this as Plaintiff's Exhibit 85 for identification?

(Thereupon said document was marked Plaintiff's Exhibit No. 85 for identification.)

959 By Mr. McCanna: Does counsel wish to inspect this?

I offer this print in evidence as Plaintiff's Exhibit 85.

By the Court: It may be received.

(Said document, so offered and received in evidence, was marked PLAINTIFF'S EXHIBIT NO. 85.)

By Mr. McCanna:

Q. Mr. Richardson, do you recall anything further about this artist's conception print that you said you saw, which is now Plaintiff's Exhibit 85?

A. No, I don't, sir.

Q. You just saw it there?

A. Well, I saw the picture. That is, I saw one of these. I have seen that, that is the same type of print, I believe.

Q. Did you have any conversation with Mr. Brasile about this picture?

A. No.

Q. With Mr. Lewis?

A. No.

Q. You just saw it there?

A. Well, I saw the picture. That is all I have seen.

960 I mean, I don't know what it was done for. I mean if you want me to express my opinion of what it is or what—

Q. Well, I am just trying to find out what you know about this print.

A. Well, all I know is, Mr. McCanna, that it is the top of that machine and it is dubbed in by somebody else because we never had anything that looked like that, not to my knowledge at least.

Q. There isn't any question in your mind but what this print, marked Plaintiff's Exhibit 85, was made by some artist from the machine, Defendants' Exhibit 33, and which is shown more clearly in this photograph, Plaintiff's Exhibit 71?

A. That is right.

961 Q. Now, Mr. Richardson, when you were at Ex-Cell-O on that second trip with the electronic timer unit, which was a filler, and these tests were conducted in your presence, what source of fluid was used in those tests?

A. We used soluble oil first, and then we used milk.

Q. Where was the source of supply?

A. It was just dumped back into the tank from the containers as it was taken out.

Q. You mean they didn't test the functioning of the float construction there?

A. No. No, they did not.

Q. Are you positive about that?

A. Yes, definitely. I can remember the man standing up on the platform pouring it back in as we took it out.

Q. Now you have seen these fillers that are made by Milk Container Equipment Corporation in actual operation, have you not?

A. No, sir, I have never seen one in actual operation.

Q. You have never seen one in operation?

A. That is correct.

962 Q. You have never been in a dairy plant?

A. I have been in the dairy plant, but I have actually never seen one in operation.

Q. You have seen the filler there installed for operating?

A. That is correct.

Q. Where does the milk supply come from to the filler?

A. It either comes right direct off the line from a tank or from a pump or from a homogenizer.

Q. When you say from a tank, do you mean an outside source, such as this tank 16, only larger?

A. Yes, it would be considerably larger than that.

Q. So that it is then fed by gravity to the tank 14?

A. Sometimes, yes.

Q. And what other form have you seen?

A. Off of a pump.

Q. I believe you testified here today, Mr. Richardson that—I may be mistaken about this—that the original drawings from which all these prints have been made, Plaintiff's Exhibits 72 to 79 inclusive, were given to Mr. Lewis.

963 A. Yes, I believe they were.

Q. What makes you say that you believe they were?

A. I just have the opinion that they gave Mr. Lewis, or that his patent attorney got all that material at one time. That is the only thing that I know. I don't—I wouldn't be too decisive about an answer and say that he had them, but I was under the impression that somebody had them and I don't know who.

Q. Didn't you design the construction shown in these drawings, Plaintiff's Exhibits 72 to 79?

A. Yes, I drew them up.

Q. Well, then, what would the patent attorney have to do with it if it was your design?

A. They were taking it over.

Q. Who was taking it over?

A. Mr. Lewis.

Q. Taking over what?

A. Well, I don't know. I was under the impression they were going to take over that machine.

Q. You mean Mr. Lewis was going to take over the manufacturing of this new machine that you had been working on?

964 A. I understood that, sir.

Q. How did you come to reach that conclusion, may I ask? Did somebody tell you about that?

A. What conclusion, Mr. McCanna?

Q. That Mr. Lewis was taking over the manufacture of this filler machine you designed.

A. Well, I understood that he was going to take over the U. S. Carton Forming Corporation, and I supposed that that went along with it.

By Mr. McCanna: I believe that is all.

965 *Cross-Examination by Mr. Clement.*

Q. Mr. Richardson, how long have you been in the dairy business or related businesses?

A. Oh, about 32 years.

Q. You mentioned the word "movement," I think, in connection with the development of this machine, which is Defendants' Exhibit 33 for identification.

What did you mean by the word "movement"?

A. The advancing of the cartons, one following the other, through the machine to a given spot underneath the opening and closing unit that we had so that it could be filled at that given point, and then advanced on to the other end.

Q. Would that be termed an automatic feature of this machine?

A. Yes.

Q. What was the primary purpose of developing this particular machine, Defendants' Exhibit 33?

A. Well, I was given to understand that the method that was being used on Mr. Mojonnier's—or the Mojonnier filler, rather, had some complaints from the Health Department on the opening and closing of it, and that they wanted a cover made or an opening and closing so that

966 there was no hand operation.

That is the end I worked towards, so that the carton was opened and filled and closed and sealed under one single unit without the inside of the carton being exposed.

Q. Why did you put the tank on that particular model?

A. The idea of the tank was for the reason of showing that a valve could be lowered into the carton. Primarily we started out with raising the carton up to the nozzle. That wasn't very efficient.

Q. Was that the use of a pedestal, I believe you identified before?

A. That was the use of the pedestal we had on there, yes.

Q. Where was the carton with relation to the pedestal?

A. Right on top of it, right below the valve.

Q. What type of filler could you have used that pedestal arrangement with?

A. Well, my idea was we were going to use the Mojonnier filler when we first started out.

Q. You were attempting to improve the features other than the filler then, is that correct?

A. That is correct.

967 Q. Had you ever met Mr. Mojonnier, one of the officers of the plaintiff, before this lawsuit?

A. Yes, I met Mr. Mojonnier in the plant of the U. S. Carton Forming Corporation, in their plant one day in the summertime. That was the only time that I ever met Mr. Mojonnier, I believe.

Q. In your experience—

By Mr. McCanna: What year was that?

By Mr. Clement:

Q. What year was that, Mr. Richardson?

A. That must have been in 1953.

Q. In your many years of experience that you just mentioned a moment ago, by whom were you employed;

A. I was first employed by the Stanley Steam Car Corporation for seven years, and then for 25 years by the Borden Dairy Company.

Q. What did you do for the Borden Dairy Company?

A. I primarily was a stationary engineer at their Sealtest plant at Lake Geneva, Wisconsin, and from then on I went through to maintenance engineering, maintenance, direct maintenance, back to engineering again under the direct supervision of Mr. E. L. Egner and Mr. Eric Wiglama.

Q. I hand you Plaintiff's Exhibit 71, which is a
968 picture—I believe it was identified as a picture or photograph of the machine that was sent to Ex-Cell-O the first time. I believe you said that you did not know who made that photograph.

Could you tell me where that photograph was made?

A. No, I don't know unless this photograph was made by one of the men from the Brooks Supply when we had it down there because they took flashlight pictures of it, though I didn't know they had a blowup of it until I saw this one.

Q. Could it have been made by the Ex-Cell-O people?

A. Yes, it could have. It could have been.

969 Q. You mentioned this valve construction on the machine that went up to Ex-Cell-O the first time, and I think you indicated that initially, before it went up to Ex-Cell-O, that valve was not complete, is that correct?

A. That is right.

Q. But the Ex-Cell-O people did run some tests on that machine, which indicated that they were operating the valve, is that correct?

A. Yes.

Q. Was that valve changed between the time you mentioned it being inoperative and the time the Ex-Cell-O people worked with it?

A. Inasmuch as just before I sent it up to Ex-Cell-O, we put that seat in it, because we had no valve in it and we want 1 to show, or I wanted to show, at least, there was a workable valve in it, something that would indicate a valve. The way it was, it was just the sleeve.

Q. So the way it was at the time before you put the seat in against which this valve rests now (indicating)—

A. Yes.

Q. Was that this would just pass right through in
970 that fashion without abutting anything, is that correct?

A. Yes, that is correct. My idea on that, Mr. Clement, was that it was large enough to pass over the Mojonnier valve. I mean I thought it would be. I don't know whether it would or not, but that was my impression that I was trying to get.

Q. You are referring to the sleeve as being large enough?

A. Yes.

Q. So that you could modify the Mojonnier device so that you could drop it into the carton?

A. Yes, drop it into the carton.

Q. What was the purpose of dropping the valve into the carton?

A. Well, with the type of opener and closer we had, we couldn't get close enough to the nozzle without spilling milk all over the place, or water, whatever you were going to use.

Q. Would it be preferable to have the valve inside the carton, generally speaking, during the dispensing?

A. Oh, I believe so, definitely.

Q. Some reference was made to some correspond-
971 ence that was sent to the U. S. Filler Corporation from Ex-Cell-O Corporation, and attention was brought to the fact that Plaintiff's Exhibit 80, for example, the report of July 2 from Ex-Cell-O, refers to the machine as the U. S. Filler Corporation's semi-automatic filler.

I hand you that document. At that time by whom were you employed?

A. I was still with U. S. Carton Forming Corporation.

Q. But U. S. Filler Corporation was in existence?

A. Yes.

Q. And Mr. Brasile was active in that corporation?

A. Yes.

By Mr. Clement: That is all.

By Mr. McCanna: Just one question.

Redirect Examination by Mr. McCanna.

Q. Mr. Richardson, are you a graduate engineer?

A. No, sir, I am not.

Q. You never have had any engineering schooling?

A. Yes, I took engineering. I took a correspondence course from the International Correspondence School.

972 Q. And this prior work that you have done that you have just testified to, would you say it was mainly as a practical mechanic?

A. Generally so, yes, though I worked as a supervisor for the maintenance department for quite a few years.

By Mr. McCanna: That is all.

(Witness excused.)

973 By Mr. McCanna: I will call Mr. Brasile, Mr. Maurice J. Brasile.

MAURICE J. BRASILE, one of the Defendants herein, called as a witness at the instance of the Plaintiff, having been first duly sworn, was examined and testified as follows:

Direct Examination by Mr. McCanna.

Q. What is your full name, please?

A. Maurice J. Brasile.

Q. And your residence?

A. 454 Lawndale, Woodstock, Illinois.

Q. And your occupation?

A. Sales manager and officer of a couple of two companies.

Q. Sales manager of what company?

A. Sales manager of U. S. Dairies Sales Corporation, Woodstock, Illinois.

Q. You are testifying here or called here in response to a subpoena served by the plaintiff?

A. Yes, sir.

Q. And you are a defendant in this case?

A. Yes, sir.

974 Q. And U. S. Dairies Corporation is a defendant here?

A. Yes, sir.

Q. I believe you said you were connected with two other corporations.

A. No, two corporations, sir.

Q. What are they?

A. Milk Container Equipment Corporation, of which also I am president.

Q. You are president of that?

A. Yes, sir.

Q. When was that incorporated?

A. I am also president of Purity Pak, which is an inactive company, I am sorry.

Q. That is one of the defendants also?

A. Yes, sir.

Q. Mr. Brasile, before I get started on your examination proper, I would like to establish the sale of this machine marked Plaintiff's Exhibit 40. It bears a serial number, which I supplied to counsel—

By Mr. Kipnis: I think we can save some time. We have a stipulation.

By Mr. McCanna:

Q. I have it right here in this stipulation, serial 975 number MJSA 3028.

A. Yes, sir.

Q. I would like to know when that filler was sold and to whom.

A. Which filler, sir?

Q. This machine here marked Plaintiff's Exhibit 40, which bears that serial number.

A. I am not sure of the exact date. I would say some time in February of 1954.

Q. I hand you a bill of lading and ask whether you can identify that.

A. Yes, sir. That is one of our bills of lading.

Q. Do you know whether that has anything to do with this machine bearing this serial number I just gave?

A. Yes, sir.

Q. Isn't that the bill of lading for that machine?

A. Yes, sir, dated February 24, 1954.

Q. And will you read from this giving the name?

A. (Reading):

"Picked up at Woodstock, Illinois, February 24, 1954, U. S. Dairies Sales Comporation. Consigned to Monument Farms, Middlebury, Vermont. Delivered, carrier with our own truck. Package No. 1, MJ-SA, milk 976 filling machine complete, 400 lbs., 100 M"—

which is an abbreviation for thousand staples—

"— 0 lbs. Balance due $1650."

It is signed by our man, Mr. Donald Bernhardt.

Q. And in consigning this filler to Monument Farms, that was an actual sale by U. S. Dairies Sales Corporation of this filling machine to whom?

A. I am not sure. It might have been through a jobber or direct from the dairy. I think it was through a jobber, the Valley Sales.

Q. Was it Valley Sales Company, Inc.?

A. Right, sir.

977 Q. That is one of your jobbers?

A. Yes, sir.

Q. Located in Springfield, Massachusetts?

A. Right, sir.

Q. And there is no question in your mind, is there, but what this machine, Plaintiff's Exhibit 40, was sold to Valley Sales, Inc.?

By Mr. Clement: Your Honor, we will stipulate that this was that machine.

By Mr. McCanna: Will you stipulate that the machine was sold February 18, 1954, as shown on here?

By Mr. Voland: By U. S. Dairies Sales Corporation, yes.

By Mr. McCanna: Sold to Valley Sales Company, Inc. of Springfield, Massachusetts?

By Mr. Clement: Correct.

By Mr. McCanna:

Q. Would you say that this paper is authentic as applying to that sale?

A. What do you mean, sir?

Q. Well—

A. I don't understand.

Q. If you don't know anything about it, well, that 978 is all right, then.

A. I never saw it in my life.

By Mr. McCanna: I will withdraw the question and rely on the stipulation of counsel, your Honor, although I would like to have in the record this bill of lading, and I will ask the Reporter to mark that as Plaintiff's Exhibit—

By Mr. Voland: Mr. McCanna, we are willing to stipulate to all the facts. Isn't this merely cumulative? So far as the sale is concerned, it is cumulative. We will stipulate to that.

By Mr. McCanna: There has been some argument, as a defense, that involves dates and I want to establish precisely—

By the Court: Well, maybe they will stipulate. Why don't you see if they will stipulate? Ask them if they will stipulate to it.

By Mr. McCanna: Will you stipulate that this identical machine, Plaintiff's Exhibit 40, was sold to Monument Farms Company, Inc. of Springfield, Massachusetts,
979 and that the sale was made by them, to Monument Farms of Middlebury, Vermont, on the date of February 18, 1954 and that this machine was shipped by U. S. Dairies Sales Corp. on February 24, 1954, to Woodstock, Illinois by truck, by U. S. Dairies Sales Corp.?

By Mr. Voland: Yes. I think the only thing I would like to make clear is that the sale which occurred on February 18th is the second sale to which you have referred, namely that by Valley Sales, Inc. to Monument Farms and that the sale to Valley Sales, Inc. was made by U. S. Dairies Corporation.

By Mr. McCanna: On the date of February 24, 1954.

By Mr. Voland: That is the date of shipment, pursuant to that sale, that is correct.

By Mr. McCanna: I want to now find out the date of sale that U. S. Dairies Sales Corporation made, as long as counsel has raised an objection that this is a sale—
980 By the Court: Go ahead. You can stipulate if you want to.

By Mr. McCanna:

Q. Will you please check on your records tonight, of U. S. Dairies Sales Corp. and find out when this filler, Serial No. MJ-SA 3028 was sold?

A. Was sold?

Q. By U. S. Dairies Sales, yes.

A. It must have been between the 18th and the 24th, sir. It was shipped on the 24th from our plant, the 24th of February, 1953—1954.

By Mr. McCanna: If counsel will stipulate to it, I will accept it.

By Mr. Voland: We will certainly stipulate to that, Mr. McCanna.

By Mr. McCanna: All right.

By Mr. McCanna:

Q. Mr. Brasile, I would like to have you tell us about your first acquaintance with Mr. Albert B. Mojonnier.
981 A. I first met Mr. Albert B. Mojonnier at the plant of the Oakside Dairy at Woodstock, Illinois, in 1949. The month and date, I am not—I don't remember, but it was the year—while I was employed by the Oakside Dairy.

Q. And what was the occasion of that meeting?

A. Well, I didn't have too much to talk about with Mr. Albert B. Mojonnier then. I was introduced to him through Mr. Jake Heisler, the owner of the Oakside Dairy, and his visit to the Oakside Dairy then was to check on the operation of a Zinpak paper filling machine.

Q. Were you the operator of that machine at that time?

A. Mr. Jake Heisler and I, sir.

Q. I hand you a photograph and ask if you can identify that.

A. Yes, sir. That is the machine at the Oakside Dairy.

By Mr. McCanna: I will ask the reporter to mark this as Plaintiff's Exhibit 86 for identification.

(Thereupon said document was marked Plaintiff's Exhibit No. 86 for identification.)

982 By the Court: I think I will ask you to adjourn a few minutes early tonight. We have nothing special in the morning. 10:15, gentlemen.

Where are you on your program?

By Mr. McCanna: Your Honor, I have Mr. Brasile and I believe I will call Mr. Lewis and I have two short depositions and I believe I can conclude with that. We had one out-of-town witness but I don't think he is going to arrive here so I assume I will conclude tomorrow.

By the Court: 10:15 tomorrow morning.

By the Marshal: This honorable court now stands adjourned until 10:00 o'clock tomorrow morning.

(Thereupon at the hour of 4:20 o'clock p. m. on Thursday, May 26, 1955, an adjournment was taken in the above-entitled cause to Friday, May 27, 1955, at the hour of 10:15 o'clock a. m.)

983 Chicago, Illinois,
Friday, May 27, 1955,
10:15 o'clock a. m.

Court convened pursuant to adjournment.

Present:

Mr. McCanna,
Mr. McKnight,
Mr. Pillote,
Mr. Allen,
Mr. Clement,
Mr. Voland,
Mr. Houghteling,
Mr. Bernat,
Mr. Kipnis,
And other Counsel.

984 And thereupon the following further proceedings were had herein:

By the Clerk: Case on trial.
By the Court: Proceed.

MAURICE J. BRASILE, one of the Defendants herein, called as a witness at the instance of the Plaintiff, having been previously duly sworn, resumed the stand and testified further as follows:

Direct Examination (Continued) by Mr. McCanna.

Q. Mr. Brasile, at the end of the day yesterday we were talking about this filler shown on photograph, Plaintiff's Exhibit 86, at Oakside. Do you recall that?

A. Yes, sir.

Q. Do you know who was the manufacturer of that filler?

A. The filler?

Q. Yes.

A. Mojonnier-Dawson Company.

Q. And is that the filler known as the Electromatic?

A. I would guess so. There are other parts on this
985 unit that was manufactured by others.

Q. Yes, but so far as the filler is concerned, you

were familiar with that and you operated the machine. I believe you said you operated that machine?

A. I did.

Q. At Oakside Dairy?

A. Yes, sir.

Q. Now before you entered into that contract with the Mojonnier-Dawson Company, dated December 29, 1951, did you know that the Electromatic filler was being applied to American Can cartons?

A. Somewhat.

Q. You had a knowledge that there was such a thing?

A. That is right, sir.

Q. I would like to go back at this time, briefly, because I omitted to do this yesterday, to have you tell us what different types of work you did prior to your first meeting with Mr. Mojonnier at the Oakside Dairy in 1949.

A. I was employed in sales with two different baking companies in Chicago. I was a grocery clerk for the Hillman's Pure Foods. I worked in an ice cream shop as a helper in manufacturing ice cream and deliveries.

I also had, by the time I met Mr. Mojonnier, about
986 seven or eight years of dairy experience in sales, about 25 per cent in sales and 75 per cent in plant operations, working on various equipment.

Q. Wasn't there some of that period devoted to delivering milk on milk routes?

A. I say 25 per cent in sales, delivering milk, yes, sir.

Q. And you also spent some years as a gas station attendant?

A. Yes, sir.

Q. Is that where you first met Mr. Richardson at Woodstock?

A. Well, he is one of the customers that came in the drive way of the gas station, yes.

Q. Now in all of this period, prior to the time we are talking about in 1949, had you any mechanical training or done any mechanical work?

A. A little bit, in regard to automobiles or little odd-and-end jobs mechanically.

Q. Just handywork, that kind of thing?

A. That is right.

Q. I hand you a document marked Plaintiff's Exhibit 58, dated December 29, 1951, and ask whether you were a party to that.

987 A. I was.

Q. Did you negotiate with Mr Mojonnier in the making of this contract?

A. Yes, sir.

Q. The other party, Mr. Polivka, that is in that contract with the Mojonnier-Dawson Company, was he present in that contract as a principal? Did he start the contract? Who promoted the thing?

A. Well, Mr. Polivka and I, and we went to an attorney, Mr. Seeley, and got his viewpoints on the contract as such.

Q. Now in the first part of that contract, will you please read this paragraph starting "Whereas"?

A. (Reading):

"Whereas the Seller has designed a Filler embodying certain principles and designs developed or invented by the Seller upon or with respect to which Seller is the owner of one or more patents or applications for patents as follows: Application for patent, serial No. 85,278, filed with the United States Patent Office on April 4, 1949."

988 Q. So that you were informed as to the Mojonnier invention?

A. At the time?

Q. Yes, at the time of entering into this contract.

By Mr. Voland: What was the question again, Mr. McCanna? I can't hear you. I am sorry.

By Mr. McCanna: I asked him if he was informed as to the existence of an invention by Mr. Mojonnier, and I will go further—identified by serial number patent application, at the time of entering into this contract.

By the Witness:

A. Mr. Mojonnier informed us of that.

By Mr. McCanna:

Q. Now in paragraph 2 of this contract, will you please read starting with:

"A working model".

A. (Reading):

"The filler is to be manufactured by the seller in accordance with specifications attached to and made a part of
989 this agreement as Exhibit A. A working model made by the seller in accordance with said specifications has been examined and approved by the purchasers as to design and function. All * * *"

Q. That is sufficient. Did you examine that working model and approve it?

A. I did.

Q. Now, Mr. Brasile, I believe this contract contains no picture of that working model.

A. No, sir.

Q. But do you know what became of the working model that you inspected?

A. We made tests of the working model at the Willow Farms in LaGrange, Illinois, under mill conditions.

Q. Is that Mr. Polivka's farm?

A. Dairy.

Q. Or dairy, rather.

A. That is right, sir.

Q. I hand you a circular marked Plaintiff's Exhibit 59 and ask what that shows.

A. This, what this shows, this picture?

Q. Yes.

990 A. The working model of the first Mojonnier-Dawson filler to fill and seal the stapled Pure-Pak containers.

Q. That is the one referred to in this contract?

A. Right, sir.

Q. Now this contract also contemplates the forming of a company to carry out this business?

A. That is right, sir.

Q. In the first place, did this contract, as you understood it, give any rights to you and Mr. Polivka? Did it give you selling rights?

By Mr. Voland: Will you repeat that, Mr. McCanna? I have difficulty hearing you and I did not hear that question. Will you please repeat that?

By Mr. McCanna: Will you please read the question?

(Whereupon the question was read as above recorded.)

By Mr. Voland: I object to that. I think it calls for a conclusion of the witness.

By the Court: Sustained.

991 By Mr. McCanna:

Q. What was your understanding, Mr. Brasile, of whether or not you obtained any rights under this contract as pertaining to this model that we are talking about?

A. I, personally, sir?

By Mr. Voland: The contract speaks for itself. I object.

By the Court: I think so.
By Mr. McCanna: All right.

By Mr. McCanna:

Q. In keeping with the contract, what did you do; did you operate under this contract?
A. Yes, sir.
Q. Did you have anything to do with Preformed Carton Corporation?
A. Yes, sir.
992 Q. I hand you a certified copy of Certificate No. 13627 by the Secretary of State of Illinois and ask whether you had anything to do with that.
A. I was one of the incorporators, sir.
Q. Of what company?
A. Preformed Carton Corporation.
Q. And that was incorporated on the date shown herein of January 23, 1952?
A. It shows it, yes, sir.
By Mr. McCanna: I offer this certificate in evidence as Plaintiff's Exhibit 87.
By Mr. Clement: No objection.
By the Court: It may be received.
(Said document, so offered and received in evidence, was marked PLAINTIFF'S EXHIBIT 87.)

By Mr. McCanna:

Q. Now this circular marked Plaintiff's Exhibit 59 and entitled: "Preformed Carton Fillers for Preformed Pure-Pak Paper Milk Cartons," did you have anything to do with putting that out?
A. Yes.
Q. That was used by Preformed in the sale of these fillers?
993 A. Yes, sir.
Q. Under the contract?
A. It was a brochure we sent to the dairy industry.
Q. And will you please read from that the last sentence in this paragraph starting with: "Never before * * *"?
A. (Reading):
"Never before has so simple yet so accurate a machine been offered to the dairy industry."
Q. And that had reference to the Mojonnier filler shown on this circular?
A. Yes, sir.

Q. Now do you see here in the court room any filler similar to the one shown on this circular? Would you look at these models here, please?

A. I see the filler bowl that is similar to it and a table.

Q. And what about this filler shown on Plaintiff's Exhibit 37?

A. That is somewhat similar.

Q. I am speaking of the filler itself, the filling mechanism.

A. Well, the nozzle is different.

994 Q. In what respect is that different?

A. The nozzle on this machine shown in the photograph here (indicating) has a different opening.

Q. You mean for these Pure-Pak cartons?

A. No, not only for Pure-Pak cartons. Well, at that time, yes, sir.

Q. I hand you a certificate No. 13630 by the Secretary of State of Illinois entitled: "Articles of Incorporation of U. S. Filler Equipment, Inc.," and ask you whether you had anything to do with that.

A. Yes. I was one of the incorporators.

Q. Why was this company formed, if you know?

A. Why?

Q. Yes.

A. Well, on June 25, 1952, on my way home from Chicago, I got in an automobile accident. I was put in the hospital for three months and during that time, the—well, the operation of Preformed Carton Corporation stood at kind of a standstill. Mr. Blum who was one of the employees and a small stockholder of Preformed Carton Corporation, visited me quite frequently up at the hospital 995 and kind of told me on his visits that Mr. Polivka and the rest of the stockholders were getting a little discouraged on the results of the filler sales of Preformed Carton Corporation and he told me also, later, about after two months—I was in the hospital for three months but in the second month of being in the hospital, he came in the hospital very excited and everything else, mentioning that he had a group of men that he was approached by, that were very interested in putting up money and starting a corporation to sell and also form Pure-Pak containers in a separate plant.

So, I suggested to Mr. Blum that maybe there was something, some way or some how that we could form a cor-

poration, that we would take active part in it because that was our livelihood at that time.

Mr. Polivka and the stockholders, they had positions, they had jobs, they were owners and part owners of a big dairy. Before that, the Ex-Cell-O Corporation didn't give us—the Ex-Cell-O Corporation in Detroit didn't give us the feeling that they were going to give us exclusive rights to form bottles for the dairies or they didn't lead us to be-
996 lieve they would even O. K. the whole operation and kind of discouraged Mr. Polivka and the other stockholders and they thought maybe it would be the best thing to, as long as they got their investment back they would be happy, and Mr. Blum thought of forming a company by which we would be the national distributor for filler sales and also enable Polivka and the stockholders, which we agreed, to give "X" money dollars on each sale until their full $25,000 that they had invested, was recovered.

That is the reason why we formed U. S. Filler and I was unable to travel when I did get out of the hospital, any place, and I wanted to be close to home, which was Woodstock.

997 Q. And who were the incorporators of U. S. Filler Equipment?

A. May I see that, sir?

Q. Yes.

A. I think I know, myself—Mr. Brasile, myself, my wife, and Mr. Eugene Blum.

Q. Did Mr. Polivka go along in the U. S. Filler Equipment Company?

A. Did he go along? What do you mean?

Q. Did he enter into it with you?

A. No, sir.

By Mr. McCanna: I offer this certificate in evidence as Plaintiff's Exhibit 88.

(Said document, so offered and received in evidence, was marked PLAINTIFF'S EXHIBIT NO. 88.)

By Mr. McCanna:

Q. I hand you a document marked Plaintiff's Exhibit 60, which has been stipulated in this case by counsel as a true copy of an agreement in writing, dated September 29, 1952, between U. S. Filler Equipment, Inc. and Preformed Carton Corporation, and ask whether you had anything to do with this?

A. You mean making up this contract or agreement?

998 Q. Whatever you had to do with it.

A. No, I didn't have anything to do with making up this agreement, sir.

Q. I note your signature.

A. Oh, I signed it, but I didn't put these words in. I don't know what you mean by making up. I am part of the agreement.

Q. Did you take part?

A. Yes, sir.

Q. In the first place you have signed this, I believe, as president of U. S. Filler Equipment, Inc.?

A. Right.

Q. And as secretary of Preformed Carton Corp.?

A. Right, sir.

Q. Why was that agreement formed?

A. Well, the Preformed Carton Corporation, right after I got out of the hospital, Mr. Blum and Mr. John A. Polivka, had a meeting with all the rest of the stockholders and presented this program to them. They agreed that night to accept the program as such. That agreement was made up then.

Q. Now I notice that this U. S. Filler, Inc. was incorporated on September 22, 1952. I hand you a drawing 999 marked—

By Mr. Clement: I think you marked the photostat, Mr. McCanna.

By Mr. McCanna: Yes.

By Mr. McCanna:

Q. (Continuing.) —marked Plaintiff's Exhibit 70, and ask you to read the notation in the upper righthand corner, please.

A. (Reading.)

"Automatic paper bottle filler-sealer-stapler—U. S. Filler Corporation, Maurice J. Brasile, Engineer J. B. Richardson."

Q. What do you know about what is shown on that drawing? Did you have anything to do with the making of the drawing?

A. No, sir.

Q. Did you have any connection with Mr. Richardson in the making of it?

A. No, sir.

Q. Did you give him any instructions at all?

A. Ideas about certain things.

Q. Were you doing that on behalf of U. S. Filler Corporation?

1000 A. Well, in a sense, yes, and no, sir.

Q. Will you please explain what you mean by that?

A. Well, when this drawing was made up, we were trying to make—to improve the movement of the container in the Mojonnier-Dawson filler because—

1001 Q. When you say "we," do you mean you and U. S. Filler Corporation?

A. Well, everybody was trying to improve it, and I came up with some ideas and then I took it upon myself to do it.

Q. Did you give any instructions to Mr. Richardson as to what he should do or what you wanted done?

A. No. I kind of explained the operation of the Mojonnier-Dawson filler, and I asked Mr. Richardson if he had some ideas, if he could improve that type of an operation. He says, "Well, maybe I have and maybe I haven't," and he went to work.

That is the way this all started.

Q. Did you tell him anything about the Mojonnier-Dawson filler in connection with the work he was to do?

A. The only thing I told him, that the dispensing of the filler, how long it took to dispense a half gallon and different sizes, and I asked him to correspond the movements to that time element of the Mojonnier-Dawson.

Q. I hand you a group of drawings marked Plaintiff's Exhibits 72 to 79, inclusive, and ask you to please inspect those and tell us whether you are familiar with

1002 them.

A. Yes, I have seen the first one.

Q. That is Plaintiff's Exhibit 72.

A. I have seen the second one.

Q. Plaintiff's Exhibit 73.

A. I have seen the third one.

Q. Plaintiff's Exhibit 74.

A. And the next one I have seen.

Q. Plaintiff's Exhibit 75.

A. And the next.

Q. Plaintiff's Exhibit 76.

A. And the next.

Q. Plaintiff's Exhibit 77.

A. And the next.

Q. Plaintiff's Exhibit 78.

A. And the next.

Q. Plaintiff's Exhibit 79.

Do you know who made these drawings?

A. Mr. Richardson, sir.

Q. Do you know why they were made? Let me put it this way: Did you give Mr. Richardson any instructions in connection with the making of these drawings?

A. No, sir.

1003 Q. He made them all on his own?

A. Yes, sir.

Q. Do you know whether he was employed by anybody—did you employ Mr. Richardson in the making of these drawings, and I am referring to all of the drawings, the one marked 70 also.

A. Yes, I did. There was an agreement between Mr. Richardson and I that we would do this in our spare time, as at that time we were so busy, we were just in the making or building, constructing a plant for forming cartons, and he took it upon himself in his off hours to do it, and I compensated him for it.

Q. What was that agreement that you made with Mr. Richardson?

A. It was just a verbal agreement. I—

Q. Well, what was the substance of it? You said there was an agreement between you and Mr. Richardson about making these drawings we are talking about.

A. Not an agreement—I mean we talked, "If you are successful in improving this movement," and that, maybe the sales would increase such that maybe we—or beforehand, well, it was just a verbal agreement that—I got a royalty from the U. S. Filler Company Corporation.

1004 Q. A royalty?

A. A small royalty.

Q. For what?

A. On sales.

Q. Oh.

Q. And if that increased my sales to sell more fillers, well, I thought I would give Mr. Richardson a little compensation from my earnings of commissions from the sales of fillers.

Q. The Mojonnier fillers?

A. Mojonnier, yes, sir.

Q. Now you referred to these drawings as being for a movement. This set of drawings, Plaintiff's Exhibits 72

to 79, inclusive, do they show any movement such as you are talking about?

A. These movements here?

Q. Yes.

A. I mean these drawings here.

Q. Yes.

A. Not these drawings. The one you have got in the other hand does.

1005 Q. What do these drawings relate to: What do these show, just generally?

A. These show drawings of a tank and a nozzle and parts of an intake valve, pins.

Q. What about this first drawing, doesn't that show an assembly beyond what you are talking about, complete assembly of a filling arrangement including a tank and valve and float control for the level?

A. The first drawing shows an intake valve and a nozzle and a tank.

Q. What about this mechanism up at the top inside the tank?

A. That shows a float.

Q. What is your understanding of the purpose of that float construction?

A. Well, from my past experience in the dairy industry, floats are always used to stop milk from overflowing over the top of the tank.

Q. And that is what the float was used for here?

A. This float here?

Q. Yes, in this drawing, Plaintiff's Exhibit 72.

A. No.

Q. What was it used for?

1006 A. The float was used to keep a level of milk in the tank.

Q. Some given level?

A. Well, on this drawing I don't know, but when this drawing was made up we didn't know a given level at the time.

Q. There was no showing in this first drawing, Plaintiff's Exhibit 70, such as that, was there?

A. No, sir.

Q. Could that have been in the Mojonnier filler that is shown down at the lefthand corner?

A. Yes. We just put that filler there. I mean, Mr. Richardson just faked that in as close as he could from a photograph that we had, our circulars.

Q. Now, Mr. Brasile, do you recall over about how long a period these drawings were made?

A. Which ones, sir?

Q. The ones you have in your hand, Plaintiff's Exhibits 72 to 79, together with this one marked Plaintiff's Exhibit 70.

A. Well, these drawings were made at different times. Now, let's take the first one, as you call it, 72, that was made July 1st.

Q. What year?

1007 A. Of 1953.

Q. Do you have any personal recollection of the making of that drawing?

A. No, sir. I left that to Mr. Richardson. He drew it up.

Q. You just give that date because it shows on the drawing?

A. That is right, because I know the reason for it on there.

Q. What is the reason?

A. Because that is when it was drawn.

Q. You are familiar then with what Mr. Richardson was doing in the making of these drawings?

A. Oh, yes, sure. Oh, I didn't understand you, sir, in the beginning. Yes.

Q. And you were following closely what he was doing?

A. Oh, no. I left that up to Mr. Richardson because he is more capable in drawing. I couldn't draw something like this. I left it up to Mr. Richardson, sir.

1008 Q. This work of Mr. Richardson covered a period from December 10, 1952 into July, 1953, as you state here, and I would like to know what contact you had during that period with Mr. Richardson, and what sort of instructions you gave him about making these drawings. Do you recall anything about that?

A. Contact? I don't understand you there, sir.

Q. Well, did you ever check with Mr. Richardson as to what he was doing during this period?

A. Oh, once in a while, sir, yes.

Q. Just to look in and see?

A. During what period was that?

Q. We are talking about the period from December 10, 1952 to this July, 1953.

A. Well, there was very little drawings made up be-

tween December of 1952—I think that was the only drawing made up, until this drawing here was made up.

Q. You mean there was just a gulf in there, nothing done in the way of drawings?

A. That is right, sir.

Q. Now, Mr. Brasile, while we are looking at this top drawing, Plaintiff's Exhibit 72, there is a date on
1009 there 3/21/53, which is March 21, 1953. Do you know anything about that?

A. Well, Mr. Richardson at that time wanted—he did ask me in July to what reference would he give this drawing to. And I says, "Why don't you carry the reference of the original drawings that you sent to me," on that model that is in this court room, that old black iron model there.

Q. The one that I believe is marked Defendants' Exhibit 33?

A. If it is, that is it. We started with that.

Q. Now what reference does that have to this drawing?

A. Well, when we made this drawing in July, we then anticipated applying this to the movement there.

Q. And you refer to Defendants' Exhibit 33 as the "movement"?

A. That is right, sir.

Q. What about the tank up there and the valve construction on that tank?

A. Well, that was made by a tinsmith. It was just a fake tank to position a supposed-to-be nozzle, so when the carton got in position on a pedestal, to raise the carton up into the nozzle, as it is now.

1010 Q. Isn't that valve mechanism on Defendants' Exhibit 33 similar to this valve mechanism shown at D on Plaintiff's Exhibit 70?

A. Yes, sir.

By Mr. McCanna: I am mistaken about that Exhibit 71. That should be 70. I ask the Reporter to please change the record where we have referred to Exhibit 71 and show it as Exhibit 70.

By the Court: You mean where you recently referred to it?

By Mr. McCanna: Yes.

Will you please read that last question?

(Whereupon the question was read as above recorded.)

By the Witness:

A. Yes, sir.

By Mr. McCanna:

Q. So that as far back as December 10, 1952, you and Mr. Richardson were considering a valve construction to be used on the filler?

A. Back in—I didn't get that date.

Q. Back at the date this drawing was made, Ex-
1011 hibit 70.

A. That was his own idea. He had the idea. From his experience working in plants, he had an idea that reversing the milk bottle, glass bottle valve, it might work. At that time, when we drew it up, we didn't know if it would work or not.

Q. Well, now you started making that model, Defendants' Exhibit 33, about when?

A. Oh, sometime in February of 1952, I would say.

Q. Don't you mean—

By Mr. Voland: It is an inadvertent error.

By Mr. McCanna:

Q. 1953?

A. Oh, 1953. I am sorry.

Q. And when you say "we started making," it, who do you mean by "we"?

A. Botts Welding Company. I mean Mr. Richardson used to go over nights and work at Botts Welding and used to make little drawings on scrap paper on the start of what he wanted.

Q. And on whose behalf was this model, Defendants' Exhibit 33, being made?

1012 A. On my behalf, sir.

Q. It was entirely your own?

A. Yes, sir.

Q. And U. S. Filler didn't have anything to do with that or Preformed Carton didn't have anything to do with that?

A. No, sir.

Q. You were just doing it entirely on your own?

A. Yes, sir.

Q. And you personally compensated Mr. Richardson for that?

A. I did.

Q. Now I am going to refer again to this drawing, Plaintiff's Exhibit 72 and call your attention to the date again, March 21, 1953, and also to the following date with the word "Rev," does that mean revised?

A. That is right.
Q. It was revised on July 8, 1953?
A. Right, sir.
Q. So that all of the drawings, or this drawing, Plaintiff's Exhibit 72, was originally made back on the date shown here, March 21, 1953?
A. No, sir.
1013 Q. And revised—
A. No, sir.
Q. (Continuing)—on the date—
A. No, sir. It was made on this date, July 1, 1953; revised on July 8th of 1953, relating to when we completed that movement. I don't know the exhibit number, but that dark machine there (indicating).
Q. Defendants' Exhibit 33?
A. That is right, sir.
1014 Q. What did you say again about this March 21, 1953 date? That related to what?
A. That movement (indicating).
Q. You mean the movement was completed then?
A. Yes, sir, just about completed. There were little odds and ends.
Q. And when was the tank with the valve parts put on there on Defendants' Exhibit 33?
A. Oh, I can't give you the exact date but that tank probably was put on there around, either March or April, somewhere in that.
Q. And what about the valve mechanism that goes with the tank that is attached to it?
A. The valve—it wasn't a completed valve, sir, at that time. It is not a valve now. I mean, it was used as, well, like, should I say like a dummy? As it stands now, it showed like a stationary valve, like the Mojonnier-Dawson, because Mojonnier-Dawson fillers that we were selling had stationary valves on them and in order to get a carton to fill, the object was to automatically raise the container into the stationary valve to eliminate splash over the table, to give us a better fill.
Q. That is the valve construction that you in-
1015 tended to put on this Defendants' Ehibit 33, is that correct?
A. Our intentions always, right from the start, were to apply the Mojonnier-Dawson filler to that.
Q. Defendants' Exhibit 33?
A. Right, sir.

Q. And that is why this drawing, D on Plaintiff's Exhibit 70, was put in there, associated with the showing of the Mojonnier filler down in the left-hand corner?

A. Well, it don't associate with the Mojonnier's filler because the Mojonnier filler didn't have this type of—

Q. Well, what was this drawing D?

A. It was an idea that Mr. Richardson had. I guess he just put it there. This drawing here don't give exact figures. I mean, it was just an idea he had.

Q. Well, that was followed up on this—

A. Later, yes, sir.

Q. Followed up in these drawings?

A. We did think—we did think maybe we could convince Mr. Mojonnier, who was with the Mojonnier-Dawson and who we were buying fillers from, to go into such type of valve.

1016 Q. Yes. Now, I want to ask you this, Mr. Brasile, as long as we are talking about this valve construction D.

A. Yes.

Q. Did you ever complete a valve construction like that and put it on Defendants' Exhibit 33, that machine over there (indicating)?

A. Yes. Sometime in July we put a stem, we made up a stem. It was sometime in July or the latter part of June, somewhere in that, we put a stem and press fitting, a fitting under the bottom of the outside barrel, to eliminate the stem from falling through and to help give us like an umbrella spray into the carton.

Q. Did that make a completely operating valve construction?

A. I wouldn't say completed. I mean, it gave us an idea.

Q Did it actually operate to dispense the flow out of the tank into a carton?

A. Yes, it did, yes, sir. Yes, sir.

You see, on this D here (indicating) we thought that sleeve, that outside sleeve, the Mojonnier people could
1017 apply on their stationary valve and it would work down into the carton.

Q. You mean they could use the solenoid control with the timer to operate this valve D as shown on Plaintiff's Exhibit 70?

A. Well, yes, sir, not alone, but other added—

Q. Referring again, Mr. Brasile, to this U. S. Filler

Equipment, Incorporated in the period from its incorporation on September 22, 1952 up to July 10, 1953, who was the principal stockholder in that corporation?

A. I was, sir.

1018 Q. You had the controlling interest in that company?

A. I did, my wife and I.

Q. And you were its president?

A. President, yes, sir.

Q. General manager?

A. Yes, sir, everything.

Q. I hand you a certificate number 13628 by the Secretary of State of Illinois entitled "Articles of Incorporation of the U. S. Carton Forming Corp.," and ask whether you had anything to do with that.

A. I was stockholder of the company and president.

Q. Did you have anything to do with forming the company?

A. No. We all talked about, all the stockholders and myself, talked about forming the company, as such.

Q. You mean stockholders of who?

A. U. S. Carton.

Q. And who started this U. S. Carton Forming Corp., if you know?

A. Oh, that was a large group of people.

Q. Were you one of the principals in that?

1019 A. Well, they made me president. I just had equal rights in the company.

Q. Equal with who?

A. With Michael DeTolve, Charles Potter, Eugene Blum and Mr. Emory Moore.

Q. And why was U. S. Carton Forming Corporation formed, if you know?

A. The need of containers to the small dairymen. We had to have, in order to sell the equipment we were selling, we were advised by the Ex-Cell-O Corporation and the board of health departments throughout the country, that we had to form these containers in a separate plant. Now, we had quite, oh, I would say at that time, I would say we had somewhat of 150 operations. Before we formed U. S. Carton, I encouraged jobbers like Dico Corporation to get an Ex-Cell-O forming machine and set up in a separate plant and enable him to furnish bottles in a perfect condition to the people that bought the Mojonnier-Dawson filler. Also, I encouraged the Northwestern Supply Company

to do the same and the Brooks Supply Company to do the same.

Now, we had to have a plant under separate—
1020 away from milk, because the board of health disagreed on forming these containers, in separate plants, and that is the reason why it was formed, solely to sell cartons.

Q. I believe this certificate shows that the corporation was formed on November 8, 1952.

A. What company is that?

Q. U. S. Carton.

A. That's right, that's right.

Q. And that was solely for the purpose of making—

A. Forming Pure-Pak containers, yes, sir.

By Mr. McCanna: I offer this certificate of incorporation of U. S. Carton Forming Corporation in evidence as Plaintiff's Exhibit 89.

By Mr. Clement: No objection.

By the Court: It may be received.

(Said document, so offered and received in evidence, was marked PLAINTIFF'S EXHIBIT NO. 89.)

By Mr. McCanna:

Q. I hand you a certificate number 13624 by the Secretary of State of Illinois of the "Articles of
1021 Incorporation of Purity Pack Corp." showing date of incorporation, September 2, 1953, and ask whether you had anything to do with that company or the forming of it.

A. I did.

Q. Did you cause this company to be formed?

A. I helped cause, yes, sir.

Q. Were you the principal?

A. I was president.

Q. Now why was this company formed?

A. Well, the reason that company was formed, I was no more employed with the U. S. Carton at that time. I mean, I had very little to do with U. S. Carton and Mr. Eugene Blum and I went on our own ways, which started the formation of this company.

Q. What was the purpose of this corporation, if you know? Why did you form it?

A. To sell bottle fillers, milk bottles, containers. That is Purity Pack you are talking about.

1022 Q. Purity Pack Corporation?

A. That is right, to fill bottles, milk bottles.

Q. And there was no intention of selling fillers for paper cartons?

A. Well, on some occasions if they had the opportunity to sell them, sell fillers, we would sell it, sure.

Q. What milk filler did they sell, if you know?

A. Purity Pack?

Q. Purity Pack.

A. MJSA.

Q. Is that the filling machine?

A. No, not at the time.

Q. Well, I am not asking as to the time, just as to the identity. Was it the filling machine that is shown there across the court room marked Plaintiff's Exhibit 40?

A. The first one.

Q. At the left?

A. That is right, sir.

Q. They did sell some of those?

A. Yes, sir.

By Mr. McCanna: I offer this certificate in evidence as Plaintiff's Exhibit 90.

1023 By Mr. Clement: No objection.

By the Court: It may be received.

(Said document, so offered and received in evidence, was marked PLAINTIFF'S EXHIBIT NO. 90.)

By Mr. McCanna:

Q. I hand you a certificate marked 13623 by the Secretary of State of Illinois, showing the "Articles of Incorporation of Milk Container Equipment Corp." as of September 2, 1953 and ask whether you had anything to do with that.

A. Yes, sir.

Q. Will you please tell us—

A. I was president of the company.

Q. Did you have anything to do with forming the company?

A. Yes.

Q. What part did you take?

A. As the president.

Q. Did you cause this company to be formed?

A. Yes, sir.

Q. And why was this company formed?

A. To manufacture fillers.

Q. What filler?

1024 A. The first one to your left there (indicating).

Q. The one marked Plaintiff's Exhibit 40?

A. 40, right, yes, sir.

Q. And is that company now manufacturing that filler?

A. Yes, sir.

By Mr. McCanna: I offer in evidence this certificate identified by the witness, the Articles of Incorporation of Milk Container Equipment, as Plaintiff's Exhibit 91.

By Mr. Clement: No objection.

By the Court: It may be received.

(Said document, so offered and received in evidence, was marked PLAINTIFF'S EXHIBIT No. 91.)

By Mr. McCanna:

Q. I hand you a certificate, No. 13629, by the Secretary of State of Illinois, showing "Articles of Incorporation of U. S. Dairies Sales Corp." as of December 18, 1953 and ask whether you had anything to do with forming that company.

A. I did.

Q. And in what respect?

A. I was president and, to have a company for the sales, sale rights of the filler that Milk Container manufac-

1025 tured, it was always my ambition to have such companies, three different companies, one to form, make, to manufacture containers; one to sell, and one to manufacture fillers.

Q. And is this company now selling the filler which is manufactured by Milk Container Equipment Corporation?

A. Yes, sir.

Q. That is the filler across the court room marked Plaintiff's Exhibit 40?

A. Right, sir.

By Mr. McCanna: I offer in evidence this certificate, to be marked Plaintiff's Exhibit 92.

By Mr. Clement: No objection.

By the Court: It may be received.

(Said document, so offered and received in evidence, was marked PLAINTIFF'S EXHIBIT No. 92.)

By Mr. McCanna:

Q. Mr. Brasile, are you acquainted with Albert A. Lewis?

A. Well, I know the name, yes, sir.

Q. What is or was your acquaintance with him in
1026 connection with any of these companies we have been discussing here today?

A. Connection?

Q. Yes. What was your acquaintance with him in connection of any of them? What was your first connection with him with reference to any of these companies?

A. I first met Mr. A. Lewis the latter part of May, last week or the second last week of May. He was introduced to me—

Q. Of what year?

A. Of 1953. He was introduced to me one Saturday morning by a gentleman who was a stockholder of U. S. Carton, by the name of Joseph DeTolve.

1027 Q. What was the outcome of that meeting?

A. Well, I was told, after introduction, I was told that Mr. A. A. Lewis was interested in putting money into U. S. Carton to enable us to expand our preforming operations, because at that time we had fourteen Senior forming machines on order at the Ex-Cell-O-Corporation. In order to place these fourteen preformed forming machines, we had to have buildings throughout the country to set them in, and we didn't have the capital at the time.

I understood before I met Mr. A. A. Lewis that he was introduced to Mr. Eugene Blum about a week prior to when I first met him, and Mr. Blum, as I understood, went over the whole operation, and he was very, very encouraged; that he actually, Mr. Eugene Blum told me, that the man is going to put up as high as $250,000.00 in this venture.

Q. Did he put that in?

A. No, sir.

Q. Mr. Brasile, at that time was Mr. Lewis interested at all in the filling machines that you were selling, that is, the Mojonnier Electromatic filling machines and that part of the business?

A. Well, he had to be. He knew the operation.
1028 He had to be interested to see that sales of machines were sold because the more machines sold, the more cartons were able to be sold.

Q. In May of 1953, what was the condition of your business dealing with the Electromatic fillers, that is, in the sale of Electromatic fillers under your contract with Mojonnier-Dawson?

A. Very, very good.
Q. Very good?
A. The sales were very good, sir.
Q. Climbing all the time?
A. Yes, sir.
Q. This was quite a new thing for the small dairymen, is that correct?
A. Well, in 1953, it wasn't quite a new thing because we had about a year and a half behind us that the trade knew of such type of filler available to them.
The new thing was the availability of cartons in small quantities, preformed cartons, to the small dairymen.
Q. Well, your filler business, though, on these Electromatic fillers was increasing very nicely, isn't that correct?
1029 A. Yes, sir.
Q. Now what was the outcome of this meeting you had with Mr. Lewis?
A. Well, it was very encouraging when I first met him because that is what the company needed, more financial assistance, and I was very enthused because at that time we owed to Mojonnier-Dawson people quite some amount of money, and it went on for, well, it continued on for months past, and nothing came about regarding financial aid by Mr. Lewis.
Q. I hand you a photostatic copy of a document entitled "Voting Trust Agreement Pertaining To Shares Of Stock Of U. S. Carton Forming Corp.," dated June 23, 1953, between A. A. Lewis and Maurice J. Brasile, named as trustees, and U. S. Carton Forming Corporation, and ask what you know about that?
A. Well, I saw it.
Q. Were you a party to it?
A. Well, I signed it.
1030 Q. I will except from this document the red scoring that happens to appear at the beginning, and ask whether you signed the original document.
A. I did, sir.
Q. Will you please examine this document and tell us, if you know, whether that is a true copy of the document you signed.
By Mr. Voland: Mr. McCanna, we have a duplicate original of that. I doubt if the witness could really tell by checking. I would be glad to check the duplicate original agaist that to stipulate to its authenticity.

By the Witness: There is a lot scratched out here. I don't know, but it is quite similar.

By Mr. McCanna: That is entirely satisfactory. We have never seen the original, your Honor.

By Mr. Voland: On the contrary, I exhibited the original to your client's attorney on several occasions and gave him a copy of it.

By Mr. McCanna: I am the attorney for the plaintiff in this case, and if that was submitted in this con-
1031 tract case, that may be something else. I would be happy to stipulate with Mr. Voland as he suggested as to the authenticity of this document.

By the Court: Very well.

By Mr. Voland: After comparison with it.

By Mr. McCanna: After comparison, yes.

By Mr. McCanna:

Q. Mr. Brasile, you were one of the shareholders that is mentioned in this document?

A. Shareholder of U. S. Carton, yes, sir.

Q. Yes.

By Mr. McCanna: I would like to have this marked—

By the Witness: I was voted by the stockholders to be the trustee of that document.

By Mr. McCanna: We will get to that presently.

I would like to have this marked Plaintiff's Exhibit 93 for identification.

(Thereupon said document was marked Plaintiff's Exhibit No. 93 for identification.)

By Mr. McCanna:

Q. Mr. Brasile, will you please look at this docu-
1032 ment marked Plaintiff's Exhibit 93, and read the paragraph on the first page starting, that is, the second "Whereas" paragraph.

A. (Reading):

"Whereas the said Shareholders are, amongst them, directors and officers and in charge of the operations of the Corporation, and are confronted with the fact that the Corporation is unable to pay its debts as they mature, is in a badly frozen condition and sorely lacking in operating capital, and that although the enterprise in which it is engaged holds promise, its sale and distribution have been improperly developed, and the Corporation, if permitted to continue in its present state, may expire in insolvency, and—"

Q. Will you read the next paragraph, please?

A. (Reading):

"Whereas the Shareholders, realizing that the only hope of reviving and saving the Corporation would be in the form of assistance obtained from an individual with
1033 thorough sales promotion, business administrative and financial policy making experience, and general business prestige, and have found such an individual in A. A. Lewis, and the said A. A. Lewis has offered his services to the Corporation toward introducing new methods of sales promotion, merchandising, business administration and financial policies, in consideration of the covenants—"

Q. Well, that is sufficient.

By this instrument, then, the voting trust agreement, Plaintiff's Exhibit 93, you and Mr. Lewis became the trustees of U. S. Carton Forming Corporation?

By Mr. Voland: I submit the document speaks for itself, if you are going to offer it, Mr. McCanna. Are you going to offer it?

By Mr. McCanna: Yes, I will offer it now as Plaintiff's Exhibit 93, subject to the stipulation.

By Mr. Voland: Yes, sir.

By the Court: It may be received, subject to the stipulation.

1034 (Said document, so offered and received in evidence, was marked PLAINTIFF'S EXHIBIT NO. 93.)

1035 By Mr. McCanna:

Q. Mr. Brasile, upon the entering into of this voting trust agreement, did you and Mr. Lewis operate U. S. Carton Forming Corporation?

A. Upon that?

Q. Yes.

A. Not immediately, sir.

Q. Well, did you do anything in response to this agreement with Mr. Lewis?

A. Well, what do you—I don't understand. What do you mean?

Q. Well, this preamble that you read here, that you agreed to, would indicate that something was to be done about the operation of U. S. Forming Corporation, and I am asking you whether—

A. Oh, somewhat. Some, somewhat.

Q. I am asking whether you did operate under this agreement.

A. A very short time.

Q. You did operate under that voting trust agreement with Mr. Lewis?

A. Very shortly. I mean a very short time, sir.

Q. I hand you another document entitled "Voting
1036 Trust Agreement Pertaining to Shares of Stock of Preformed Carton Corporation," dated July 10, 1953, between A. A. Lewis and Preformed Carton Corporation, and ask whether you had anything to do with that, with the making of that agreement?

A. Not the making of it. I just signed it, sir.

Q. Well, you entered into the agreement?

A. Yes, sir.

Q. At the time this agreement was entered into, you were president of Preformed Carton Corporation, is that correct?

A. No, sir. I was secretary of Preformed Carton Corporation.

Q. But you were the principal shareholder?

A. No, not the principal, no, sir.

Q. You were one of the largest?

A. I was a stockholder. I wasn't the largest stockholder, no, sir.

Q. Who was?

A. Well, it was Mr. Polivka and I had equal stock in the company.

Q. Yes, this Preformed Carton Corporation goes back to the contract of December 29, 1951, with Mojonnier-Dawson Company?

1037 A. That is right. I had equal stock. I mean as much as Mr. Polivka, and there was lots of others had stock in it too. I think I had about, oh, maybe thirty-three and a third of the stock.

Q. Would you say that this copy of this voting trust agreement is a true copy?

In this respect will we make the same stipulation?

By Mr. Voland: Yes, I would like to, Mr. McCanna.

By Mr. McCanna:

Q. What was your answer?

A. Yes, sir.

By Mr. McCanna: I offer this voting trust agreement in evidence as Plaintiff's Exhibit 94.

By Mr. Voland: Subject to the stipulation, there is no objection.

By the Court: It may be received.

(Said document, so offered and received in evidence, was marked PLAINTIFF'S EXHIBIT NO. 94.)

By Mr. McCanna:

Q. Mr. Brasile, as I understand it, Preformed
1038 Carton Corporation was selling Electromatic fillers made by Mojonnier-Dawson Company at the time this voting trust agreement was entered into, was that correct?

A. You mean selling directly?

Q. Selling to the trade or someone, I don't know.

A. Not Preformed Carton.

Q. Well, they had a contract with Mojonnier-Dawson, didn't they?

A. Yes, but I mean, they weren't selling directly. I mean they had—they gave us the right to sell directly, the U. S. Filler Company, they gave us an agreement. I mean, Preformed Carton was a company just—

Q. You are referring now to the agreement of September 29, 1952, which we marked Plaintiff's Exhibit 60?

A. That is right, sir.

Q. Now, will you please read the second "Whereas" clause on the first page from this voting trust agreement between Mr. Lewis and Preformed Carton Corporation.

A. The second one?

Q. Yes.

1039 A. (Reading):

"Whereas, some of said shareholders are amongst them directors and officers and in charge of the operation of the corporation and are confronted with the fact that the corporation is unable to pay—"

Q. The corporation is what?

A. (Continuing):

"is unable to pay its debts as they mature, is in a badly frozen condition and sorely lacking operating capital, and that the corporation owns certain contracts entered into with other corporations which might be properly developed to the benefit of the corporation, were it to have the advice—"

Q. That is "were it to have"?

A. (Continuing):

"were it to have the advice and counsel of some outside individual having proper experience and background in

matters of this kind, which said experience and background is lacking amongst the shareholders."

1040 Q. And will you read the next paragraph, please?

By Mr. Kipnis: If your Honor please, I haven't objected to this, but it seems to me we are wasting a lot of time, reading these documents. They are in evidence.

By Mr. McCanna: Well, your Honor, I would like to say this: That this is a very material connection between the defendants here, and we will be over it very shortly. I would just like to get it into the record.

By the Court: It is in the record. You offered it, and it is received.

By Mr. Kipnis: We haven't objected to it.

By the Court: It is in the record. If you want to read it, read it.

By Mr. McCanna: All right, thank you.

By the Court: You read it.

By Mr. McCanna:

Q. Will you please read that second paragraph?

By the Court: You read it.

By Mr. McCanna: You want me to read it?

By the Court: Yes, if you want it in—any more than it is in.

By Mr. McCanna: (Reading.)

1041 "Whereas, the Shareholders have induced one A. A. Lewis, an individual who is thoroughly experienced and capable in sales promotion business, administrative and financial policy making and has general business prestige to offer his services to the corporation for the purpose of consultation and advice in the reorganization and operation of its affairs and the said A. A. Lewis has accepted said appointment upon the condition that he have the complete voting power of the shareholders under this Voting Trust Agreement."

By Mr. McCanna:

Q. You understood these provisions when you signed this contract, Mr. Brasile?

A. Not all of it.

Q. Oh, you didn't?

A. No, sir.

Q. But you did sign it?

A. Yes, sir.

Q. As a principal shareholder of Preformed?

A. Yes, sir.

By Mr. McCanna: I offer this—

1042 By the Court: You offer what?

By Mr. McCanna: Your Honor, I had offered it already.

By the Court: It has been offered and received, hasn't it?

By Mr. McCanna: Yes.

By Mr. McCanna:

Q. I hand you a document, copy of a document, and entitled, "Voting Trust Agreement Pertaining to Shares of Stock of U. S. Filler Equipment, Inc.," dated July 10, 1953, between A. A. Lewis, referred to as the Trustee, and Maurice J. Brasile, Pauline R. Brasile and Eugene Blum, owners and holders in the aggregate of all of the outstanding and issued shares of the common capital stock of U. S. Filler Equipment, Inc., and ask whether you signed this agreement.

A. Yes, sir.

Q. So far as you know, this is an authentic and true copy of that agreement, subject to the stipulation which counsel has made?

A. Yes, sir.

By Mr. McCanna: Will the reporter please mark this as Plaintiff's Exhibit 95 for identification?

1043 (Said document was marked Plaintiff's Exhibit No. 95 for identification.)

By Mr. McCanna:

Q. I will read you the first "Whereas" clause, Mr. Brasile, from this voting trust agreement, Plaintiff's Exhibit 95:

"Whereas the Shareholders are directors and officers and in charge of the operations of the Corporation and have found that the corporate enterprise is not thriving and does not have the proper management and financial administration, and"

The second clause:

"Whereas the said A. A. Lewis is an individual equipped with thorough business experience, including financial administration and unusual sales ability, and the said Shareholders have approached the said A. A. Lewis, requesting him to lend to the Corporation his consultation, advice and guidance during such time as he may be able to spare from

his other enterprises and endeavors, and, in order to
1044 induce the said A. A. Lewis to take over and manage the affairs of the Corporation, they have offered to place all of their shares of stock in trust under this Voting Trust Agreement with the said A. A. Lewis, constituted as Voting Trustee without any restriction whatsoever, and the said A. A. Lewis has agreed to accept this Trust and to lend time and effort to managing the corporate enterprise provided he shall have the unqualified right to vote each and all of the shares of the common capital stock of the Corporation."

You entered into that agreement, is that correct?

A. I signed it but I didn't understand most of it.

1045 Q. The business at that time of U. S. Filler Equipment, Inc. was made up entirely or comprised entirely selling and distributing of Electromatic fillers made by the Mojonnier-Dawson Company?

A. That is right, at its beginning.

Q. Well, for how long a period had U. S. Filler Equipment been selling and distributing the Electromatic fillers?

A. Well, it always has, but not exclusively. I mean, we gave it to jobbers—you know what I mean.

Q. Yes, but the fillers that were purchased from the Mojonnier-Dawson Company through that original contract—

A. Were all sold through U. S. Filler, yes, sir.

Q. They channeled through U. S. Filler?

A. Yes, sir.

Q. And this voting trust agreement entered into July 10, 1953 was intended to show the condition of U. S. Filler Equipment at that time?

A. What condition was that, sir?

Q. Well, I will read it again, "Whereas, the said—"

By Mr. Kipnis: If your Honor please, I think the
1046 document explains what the condition was. It is objected to.

By the Court: Yes, sustained.

By Mr. McCanna: Well, I will accept that. I think it is clear from what we read into the record.

By Mr. McCanna:

Q. Now, Mr. Brasile, what is the status of these trust agreements of which you were a party at that time? What is the present status of them?

A. I have no part of those trust agreements at the present time, sir.

Q. Have the trust agreements ever been canceled?

A. To my knowledge, on my part they have.

Q. Has there been any written notice of cancellation of those?

A. Yes, sir.

Q. When was that notice given?

A. In December of 1953.

By Mr. McCanna: I would like to have the witness produce those notices, your Honor.

By Mr. McCanna:

Q. At this time I will call your attention, Mr.
1047 Brasile, to the deposition which the plaintiff took on April 18, 1955, that is, your deposition.

I would like to have that deposition produced, please, from the file.

I would like to have the deposition marked for identification, please, as Plaintiff's Exhibit 96.

(Thereupon said document was marked Plaintiff's Exhibit No. 96 for identification.)

By Mr. McCanna:

Q. I call attention to page 128 of that deposition. If you will recall, I had been asking you as to what was your position at the present time with respect to U. S. Filler, Inc. and U. S. Carton, and you said something to the effect that you didn't exactly know.

Then there was a discussion off the record between Mr. Voland and myself.

Then I made this statement:

"Mr. Voland and I have had an off the record discussion of who are the officers now, and when, if any, Mr. Brasile's term of office in these companies, U. S. Filler Equip-
1048 ment, U. S. Carton Forming Corporation, and Preformed Carton Corporation terminated, if any, and I believe it would be acceptable to us if Mr. Voland will make a statement such as he has made off the record. Would that be satisfactory?"

And Mr. Voland said:

"Surely."

And he proceeded with this statement:

"Prior to the execution of the voting trust agreements, which have been identified here as Plaintiff's Exhibits 23,

24 and 25 for identification, Messrs. Brasile and Blum were officers of U. S. Carton Forming Corporation, U. S. Filler Equipment, Inc., and Preformed Carton Corporation."

Then you interjected:

1049 "Pardon me, Mr. Blum wasn't an officer of Preformed Carton Corporation, never.

"Mr. Voland: With that exception. I stand corrected. I think you are right.

"Shortly after these voting trust agreements were signed, namely, in the latter part of August, 1953, Mr. Blum and Mr. Brasile consulted me with respect to action to be taken to set those agreements aside, it being their contention that the execution of those agreements was procured by fraud on the part of Mr. Lewis, and litigation to set them aside has been deferred only because of the pendency of this litigation.

"Meanwhile, Mr. Lewis, having acquired the possession of corporate records and seal at the time of the execution of the agreements, and having also acquired the ownership of the stock in these corporations, which was endorsed to him and delivered to him solely as trustee under the agreement, has been in a position to, and doubtless has

1050 exercised the powers conferred upon him under those agreements, all without any knowledge or notice thereof to us.

"My clients, Mr. Blum and Mr. Brasile, for the reasons stated, do not recognize the propriety or the validity of any action taken by any officers which Mr. Lewis may have caused to be elected in these companies, and do take the position that they, in contemplation of equity, at least, continue to be stockholders and officers of that company. They have not been active at any time in either U. S. Filler or Preformed Carton since the time of the execution of those voting trust agreements. They have done nothing to exercise the functions of their offices, and those corporations have, to the best of our knowledge, have been inactive at all times since that date.

"They did continue as officers and directors of U. S. Carton Forming Corporation until, as I recall, the 1st of December, 1953."

1051 Then I asked you, Mr. Brasile:

"Q. Mr. Brasile, is that in accordance with your knowledge?"

And you said:

"A. Yes, sir."

And then Mr. Voland continued:

"You might just add to that statement that Mr. Blum and Mr. Brasile have filed one or more annual reports of U. S. Filler since the execution of the voting trust agreements, merely for the purpose of continuing their known acquiescence in the de facto control of that company which Mr. Lewis exercises."

By Mr. Voland: It is "nonacquiescence", Mr. McCanna. It is nonacquiescence and not "known acquiescence."

By Mr. McCanna: That is an error.

By the Court: It appears as "known", but if that is an error, you can agree.

By Mr. Voland: It is stated "nonacquiescence", O-K.

By Mr. McCanna: That is satisfactory: "• • •
1052 nonacquiescence in the de facto control of that company which Mr. Lewis exercises."

And then I asked you:

"Q. That is in keeping with your knowledge, is it?"

And you said:

"A. Yes, sir."

By the Court: Well, do you want to ask him if those answers are true?

By Mr. McCanna: Yes.

By Mr. McCanna:

Q. I now ask you, are those answers and those statements true?

A. Yes, sir.

By the Court: I think I will ask you to recess at this time until 2:00 o'clock. How much more time will you take on this gentleman?

By Mr. McCanna: I would like to follow up—

By the Court: Yes, but how much more time will you take with him?

By Mr. McCanna: It may be an hour and a half or two hours or so.

1055 By the Court: All right, 2:00 o'clock, gentlemen.

By the Marshal: This Honorable Court stands at recess until 2:00 o'clock this afternoon.

(Thereupon at 12:10 o'clock p. m., on Friday, May 27, 1955, a recess was taken until 2:00 o'clock p. m. of the same day.)

1054

Chicago, Illinois,
Friday, May 27, 1955,
2:00 o'clock p. m.

Court convened pursuant to a recess.

Present:

Mr. McCanna,
Mr. McKnight,
Mr. Pillote,
Mr. Allen,
Mr. Clement,
Mr. Voland,
Mr. Houghteling,
Mr. Bernat,
Mr. Kipnis,
And other Counsel.

1055 And thereupon the following further proceedings were had herein:

By the Clerk: Case on trial.

MAURICE J. BRASILE, one of the Defendants, called as a witness at the instance of the Plaintiff, having been previously duly sworn, resumed the stand and testified further as follows:

Direct Examination (Ctd.) by Mr. McCanna.

Q. Mr. Brasile, I hand you a photograph marked Plaintiff's Exhibit 71 and ask whether you can identify the machine shown in that.

A. I can.

Q. What is that machine?

A. Defendants' Exhibit 33?

Q. Defendants' exhibit, yes. Is that the machine you had built at Woodstock working with Mr. Richardson?

A. At Botts', that's right, sir.

Q. You mean the machine was actually made at the Botts Welding Company, is that it?

A. Yes, sir.

Q. And was all of this done at your own personal
1056 expense?

A. Yes, sir.
Q. Did you pay Botts Welding Company by check?
A. Yes, sir.
Q. Your personal checks?
A. Yes, sir.
Q. Did you pay Mr. Richardson by check also?
A. No.
Q. Why did yer differentiate?
A. Well, Mr. Richardson wasn't getting paid in monies at the time that was happening. He was—
Q. Was he getting paid in anything else?
A. Pardon?
Q. Was he being paid in any other way?
A. Later on.
Q. By whom?
A. By myself.
Q. You mean everything that was done in the making of this machine whic., is Defendants' Exhibit 33, was done by yourself, personally?
A. Done?
Q. Made and constructed, in development.
A. By me, personally? No, sir.
Q. Well, you paid for it all?
1057 A. Yes, sir.
Q. And it was being done for your benefit, personally, is that it?
A. For me, at my request, yes, sir.
Q. Now, roughly, what would you say you paid to Richardson on this work in its entirety?
A. Personally?
Q. Yes.
A. Nothing.
Q. And can you estimate about what you paid to Botts Welding Company for making the machine?
A. About two thousand—around $2200.
Q. Now was this model that is shown in Defendants' Exhibit 71 and which is marked here Defendants' exhibit—well, it is Plaintiff's Exhibit 71 and Defendants' Exhibit 33; was that sent up to Ex-Cell-O in Detroit?
A. Which is that?
Q. That is the machine here, to the right (indicating).
A. Is that Exhibit 71 there?
By Mr. Kipnis: If your Honor please, I think we are wasting a lot of time. We spent a lot of time on that

machine yesterday. The evidence shows it was abandoned on July 2, 1953, that is, about seven months before the patent was issued. I don't think it is fair to the Court to spend all that time going into the machine all over again if counsel is intending to go into the structure and mode of operation.

By Mr. McCanna: That is not my intention, your Honor. The witness Mr. Richardson yesterday said he knew nothing about who was building this machine, except Mr. Brasile.

By the Court: All right. The objection is overruled.

By Mr. McCanna:

Q. We are talking about the machine shown in this photograph, Plaintiff's Exhibit 71.

A. You asked me if it went up to Detroit?

Q. Yes.

A. Yes, sir.

Q. Who sent it up there?

A. I did.

Q. And why did you send it there?

A. They wanted to test the machine.

Q. You say "they wanted to test."

A. The Ex-Cell-O. I am sorry. The Ex-Cell-O Corporation wanted to make a test on the machine.

Q. How did it come about that they wanted to test it?

A. How?

Q. Yes.

A. Well, Mr. Paul Culver who is one of the long employees—he was employed by the Ex-Cell-O Corporation about thirty-five years, lives in Lake Geneva, Wisconsin, and he was—he had been very close to this operation of ours. He watched the development of that machine at Botts Welding. He saw it maybe once or twice a month and the reason why we sent it. The Ex-Cell-O Corporation put out a bottle, a milk container, rather with their name on it and the great interest to the public was to put out a bottle that would not leak or would be more accepted by the public and they were not satisfied at that time on the operation of the Mojonnier-Dawson filler.

Q. Who told you that?

A. Oh, I was told by Mr. George Hoffman who is sales manager, Mr. Scott, vice president Mr. Andre, Charles Monroe, the head engineer, and also the board of health

departments throughout the country who were very dissatisfied on the way the human element was handling the container when it was opened and closed.

Q. And those are the reasons you sent this machine up to Ex-Cell-O?

A. Well, they wanted to run tests and see that
1061 the movement we had would eliminate defects or the faults we were having with the operation of the Mojonnier-Dawson machine.

Q. I hand you a two-page paper marked Plaintiff's Exhibit 80 and ask whether you have ever seen that before.

A. Yes. I was sent a copy of this.

Q. You were familiar with that after the report was given?

A. I was familiar with the report. It was sent to me, yes, sir, a copy.

1062 Q. Well, what was your understanding of this report?

A. Well, the report didn't show too well. They made suggestions what we should do in refining the machine operation.

Q. And what did you do about that, if anything?

A. On that machine, sir?

Q. Well, in response to their suggestion?

A. We didn't do a thing about it.

Q. You just dropped it entirely?

A. That is right.

Q. Did you do anything further in connection with making a filler?

A. When?

Q. Oh, after this. You say this model, Defendants' Exhibit 33, was dropped?

A. Yes.

Q. Who dropped it?

A. I did. Mr. Richardson and I, at my request.

Q. Request to who? You said on your request.

A. At my request, we dropped it.

Q. Yes.

A. That is it.

Q. All right. Did you do anything further toward
1063 making a filler for paper cartons?

A. Yes. About the middle of July or the latter part of July sometime, we were forced to go into making a filler for filling Pure-Pak containers.

Q. And what did you do about that?
A. Well, we went to work then.
Q. What did you make?
A. We made a filler as you see—that is in the court room here.
Q. This one marked Plaintiff's Exhibit 40?
A. That is right.
Q. Over to the left?
A. That's right.
Q. Now that is a finished commercial model—
A. That one there (indicating), yes, sir.
Q. This Exhibit 40 (indicating)?
A. Yes, sir, that is right.
Q. Before you had a finished commercial model, did you make any other model?
A. Well, we just had the tank and we had a solenoid, an arm activated to an outside barrel of the nozzle, a stem, that is, in the nozzle, and we had a timer made at that time.

Around September, we completed that, sometime
1064 in September.

Q. I hand you a drawing, Plaintiff's Exhibit 81, and ask whether that shows the filler you are now talking about. I mean, the filling mechanism itself.
A. It does. Just the filler bowl and what I just got through saying, that's all. The other parts were made later, it shows here (indicating).
Q. Well, I am asking, following up on what you said you built as—
A. We built a tank. We made a float. We made what we call an intake valve. We made an outtake valve which is a nozzle. We bought a solenoid and we made a stem that was inserted in the nozzle, the inside barrel of the nozzle, and the timer.
1065 Q. And those were all assembled?
By the Court: And a what?
By the Witness: And a timer.

By Mr. McCanna:
Q. An electronic timer?
A. That is what you call it, a timer. Yes, a timer.
Q. I wanted to make certain whether it was electronic.
A. Electronic, that is right, I am sorry.
Q. And you bought that from whom, the timer?

A. We bought that from Woodstock—Woodstock Industries.

Q. What did you do with that electronic timer?

A. We attached the timer to the solenoid. We then—

Q. I mean, is that the one you sent up to Ex-Cell-O?

A. That is right.

Q. The second filler that you sent up there?

A. Sometime in September, I don't know the exact date. We didn't send it. Mr. Richardson put it in his car. He and his wife took it up there.

Q. Why was that taken up there?

A. Pardon?

1066 Q. Why was that electronic timer taken up there?

A. Well, they were pretty interested because we needed fillers because sometime in June or July, I think it was in June, the Mojonnier-Dawson Company stopped shipping us fillers, and we had a group of men, or all of us had our life line staked in this big building of the preforming plant, a dry plant in Woodstock. We had orders, and the need for fillers was terrific at the time, and we had to get a filler made up to supply our demand. If we didn't we would go out of business.

Q. Was the Ex-Cell-O Company asking you to send this electronic filler up there?

A. Yes, sir.

Q. Who asked you to send that up there?

A. Mr. Andre.

Q. Who else, if anybody?

A. I talked to Mr. Charles Monroe, their chief engineer, and I think it was George Hoffman, too.

Q. Why did they want that filler up at their place?

A. Well, at that time, in August and September, you see, we are no toolmakers and that, and they are a company that could build. They had lathes and every-

1067 thing. They were kind of interested to build a filler as such, and I made them interested, tried to talk them into building a piece of equipment for us to sell.

Q. What was the outcome of sending this electronic filler up to Ex-Cell-O?

A. When I went up there, they thought that the electronic timer and assembly that we had needed some refinements. But in the meantime they came up with an idea that it would be cheaper for them to convert a piece of equipment that they were already manufacturing, what they called the Ilreco nest pile type of container, in order

to fill and seal straight sided cartons. The only thing they had to do was to change the pockets on their present model.

They thought they would get in production. As a matter of fact, they had one when I went up there already completed. Their type of filling, which is a piston type of filling, predetermined on that model, is quite expensive, and they thought they might convert our type of filling on that piece of equipment, which was called at that
1068 time Model MO for Ilreco, and then later for straight-sided Pure-Pak formed cartons, Model O.

Q. And is that the reason why you sent this there?

A. Yes, sir.

1069 Q. At that time the Mojonnier Electromatic filler was on the market, wasn't it? Mojonnier-Dawson was putting out an Electromatic filler?

A. Yes, sir.

Q. That was available to Ex-Cell-O Corporation, wasn't it, if they wanted to buy one and look at it?

A. That I don't know, sir.

Q. Who did you say gave you these reasons for sending this filler up there?

A. Mr. Andre, Mr. Charles Monroe, Mr. George Hoffman, and probably George Scott. I talked to them on the phone before we sent it.

Q. This was all done on the telephone?

A. Right, verbally on the telephone. That is right, sir.

Q. Did they make any test of this electrically timed filler?

A. I think they did.

Q. I hand you a paper marked Plaintiff's Exhibit 82, and ask you what you know about that.

A. This is the test that they ran on the filler that we sent up.

Q. The one that is like—

A. The one you see in the court room.

1070 Q. Like Plaintiff's Exhibit 40 there?

A. 40, sir, that is right.

By Mr. Clement: What exhibit number was that, Mr. McCanna?

By Mr. McCanna: Exhibit 82.

By Mr. McCanna:

Q. Here is a letter marked Plaintiff's Exhibit 83. It has on the letterhead, "Milk Container Equipment Corp." dated October 15, 1953.

Do you know anything about that?

A. Yes, I do. Mr. Richardson showed me that.

Q. This letter says:

"Maurie will write you in regard to these prints," and this being a letter to Mr. Andre, did you write to him?

A. I did.

Q. What did you tell him?

A. That immediately upon his request that we will send the prints to him.

Q. That letter is transmitting the prints, isn't it?

A. Oh, "I am sending you complete set of prints—" Yes, we sent them.

Q. Oh, yes. Here is a photostat of a letter on the
1071 stationery of Ex-Cell-O Corporation, dated October 26, 1953, addressed to you, and written by Mr. E. R. Andre, Pure-Pak Division.

Do you remember receiving the original of that letter?

A. Yes, I do.

Q. Will you please read the first paragraph of that letter?

A. (Reading):

"Jack Richardson sent along the blueprints of the electrical timed filler which you had sent to us for testing. I wrote to Jack today and told him that we forwarded these prints to Charlie Monroe to take a look at them and see if he had any ideas on simplification of any of the parts, and then we are going to send them along to our estimating department for price and quantities of 100, and as soon as this information is available we will see that you receive it."

Q. What does the next paragraph say?

A. (Reading):

"When you and Mr. Blum were here, I believe we suggested that you send us a bundle of preformed con-
1072 tainers so that we could properly determine the size of the stand which will be required to hold the packages prior to their being put into the carriers on the filler sealer. If you have not already done so, will you please send them to the attention of Mr. Jack Wills at the Hamilton Avenue Plant?"

Q. You received this letter?

A. Yes, sir.

By Mr. McCanna: I would like to introduce this copy of letter into evidence as Plaintiff's Exhibit 97.

By Mr. Clement: No objection.

By the Court: It may be received.

(Said document, so offered and received in evidence, was marked PLAINTIFF'S EXHIBIT NO. 97.)

1073 By Mr. McCanna:

Q. Now this letter from Mr. Andre to you says that he is going to have their estimating department give you a price on these machines in quantities of 100.

A. That is right, sir.

Q. Did they?

A. No.

Q. Did they make any explanation as to why they didn't?

A. Well, I think we stopped corresponding with them regarding that.

Q. Why did you stop?

A. Well, the reason for it, I made a telephone call to Andre after that letter and asked about how long would it take them to get into production with this type of unit. He thought that it would be about three or four months. Well, we couldn't wait that long, so then Mr. Richardson and I took it upon ourselves to start making parts and going into manufacturing.

Q. The Ex-Cell-O Corporation is quite a large

1074 concern, isn't it?

A. Yes, sir.

Q. Their Hamilton plant that he is talking about here is blocks long, isn't it?

A. Yes, sir, but they are not equipped to handle small pieces of equipment.

Q. And you are not familiar then with their entire line of manufacture, are you?

A. Pardon?

Q. You are not familiar with their entire line of manufacture?

A. Well, they thought they would put it in their Lima, Ohio, plant, but at that time the Lima, Ohio, plant was on strike.

Q. Well, did that terminate the matter with them then?

A. That is right, sir.

Q. Then what did you do?

A. Well, Jack Richardson and I went to small tool shops in Woodstock and asked if they would try to produce different components of the machine, and they were

encouraged over it. I explained the possibilities, that we have volume equipment to sell, and they were very, very interested.

1075 We contacted, oh, some ten or twelve small tool and die makers, tool and die making shops, and we finally came up with four or five that would really give us production.

Q. They are in Woodstock?

A. Yes, sir.

Q. Now you are talking about making the entire machine, Plaintiff's Exhibit 40?

A. Yes, sir. Everything is made in Woodstock with the exception the tank is made in Chicago and the float is made in Pennsylvania. Pardon me, and the hydraulic is made at John S. Barnes in Rockford, Illinois.

Q. How long did it take you to get ready and actually get into manufacture of this machine?

A. Into production?

Q. Yes.

A. We produced our first machine in late December.

Q. This report that came back from Ex-Cell-O was October 26th?

A. That is right, sir.

Q. The latter part of October?

A. That is right.

Q. And in that short time you put things together?

1076 A. That is right, yes, sir.

Q. Now did Mr. Lewis work with you in developing or getting ready for production on this machine that you are telling about?

A. No, sir.

Q. He didn't do anything on that?

A. No, sir.

No, sir, you mean the production and the operation of—

Q. This machine marked Plaintiff's Exhibit 40.

A. No, sir.

Q. Didn't he go up to see the W. F. and John Barnes Company at Rockford about production or manufacturing problems on that?

A. Not to my knowledge.

Q. Didn't he go over to see Pabich Company to have the hydraulic unit developed?

A. Oh, he visited them while I was in production on our model machine.

Q. Didn't you go with him to Pabich?

A. Yes. I say he visited, but he didn't have anything to do in the production. You asked me if he had something to do with the production of that machine. He had nothing to do with it.

1077 Q. Well, he had these voting trust agreements with you then, didn't he?

A. Not at that time. He had nothing to do with these voting trust agreements at that time, sir.

Q. Those voting trust agreements, as I understand it, are in existence today.

A. Well, I have nothing to do with them today, sir.

Q. So you say that Mr. Lewis did nothing in the way of any effort or any activity in the developing of this machine, Plaintiff's Exhibit 40?

A. Just paid visits is all.

Q. Just went around with you to see what was being done?

A. That is right. No, he just was curious. It was something new to him, the first time he ever seen anything like it.

1078 Q. Did you ever show this model, Defendants' Exhibit 33, to Mr. Lewis?

A. Yes, sir.

Q. Tell us about that. What did you tell him about it?

A. Tell him?

Q. Concerning this model. When did you first show it to him, if you recall?

A. It must have been early June, the last week of May or the first part, the first week in June, because I didn't meet Mr. Lewis until either the middle of June or the last week of June, somewhere in through there.

Q. What did you tell him about this machine?

A. I just showed him that here is something that will help us in our sales of the Mojonnier-Dawson fillers at that time, regarding to the handling of the containers, of the opening and closing. In other words, it was the automatic; it will be an automatic operation. He was quite enthused.

Q. Where was the machine located when you showed it to him?

A. I showed it—

Q. When you showed it to Mr. Lewis?

1079 A. It was in the office of U. S. Filler then.

Q. And is that the only time he saw it, so far as you know?

A. Yes, sir. Yes, sir.

Q. I hand you an instrument dated October 1, 1952, entitled "Agreement Between Brooks Supply Company and U. S. Filler Equipment, Inc.," and ask whether you can identify that.

A. Very much so.

Q. What is it?

A. This is an agreement giving the Brooks Supply Company of Joplin, Missouri, the exclusive sales rights of selling the Mojonnier-Dawson fillers and also an agreement—

Q. Is that restricted to territory?

A. Well, they have an exclusive right, restricted territory. I mean, that is right.

Q. Approximately what territory?

A. They had parts of Kansas, all of the State of—parts of Missouri, the southern part of Illinois, it was the very southern tip of Illinois, the very westerly part of Tennessee, all of the State of Texas, all of the State of Arkansas, all of the State of Mississippi, all of the
1080 State of Louisiana and all of the State of Oklahoma.

Q. Did you have any other distributor contract of this general type?

A. Pardon?

Q. Did you have any other distributor contracts?

A. Yes, sir.

Q. Covering territories comparable with this?

A. Yes, sir.

Q. What kind of business did you do with Brooks under this distributor contract? Did you do a large business or a small business?

A. Well, he wasn't the largest jobber.

Q. Who was your largest jobbers?

A. I would say the Dico Company at Des Moines, Iowa.

Q. Was he the second largest?

A. I wouldn't say that. I would say Mailander, Barnett and Barnett & Company, which are two of the same, in Indianapolis.

Q. But he was a large distributor?

A. Oh, yes, sir.

Also, in this contract—do you want me to explain the contract?

1081 Q. No, I don't think we need the details. I just want a general picture of your connection with Brooks Supply Company.

A. The reason why this contract was drawn up was that we were to enable him to get an Ex-Cell-O preformed machine to preform cartons in the dry plant because without that, he was unable to sell fillers and that was our duty verbally to see that the Ex-Cell-O Corporation got him a preformed machine and we accomplished that and helped set this plant up free of charge.

Q. I notice this contract recites a description as to what the milk filling device is:

"A description of specifications for said device being set forth in the brochure attached to and incorporated as a part of this contract."

A. That's right, sure.

Q. Do you find that brochure there?

A. No, I don't. I find a price list but the brochure was of Mojonnier-Dawson.

Q. What model filler did you have in mind at the time of this contract, on the drawing of this contract?

1082 A. All models of Mojonnier-Dawson on the Pure-Pak operation.

Q. Do you remember which one was attached to the—

A. I think the one—

By Mr. Voland: If the Court please, what is the possible materiality of this line of questioning that has to do with events that occurred while there was a contract between Mojonnier-Dawson Company and Preformed Carton Corporation back in 1952?

It seems to me we have been very patient with your Honor's desire to permit Mr. McCanna to try to put his case in, in his own way, but I do think we are going far afield here. I can see no relevancy or materiality to this whole line of inquiry to any of the issues in this case.

By The Court: Well, I am going to overrule the objection.

By Mr. McCanna: I will try to cover this as quickly as I can, your Honor.

1083 By Mr. McCanna:

Q. I hand you a circular and ask you whether that shows the filler that was intended in this agreement with Brooks?

A. Yes, sir.

Q. Is that the one known as the Mojonnier-Dawson CP model?

A. CP, yes, sir.

By Mr. McCanna: I offer ths agreement in evidence and

also the circular in evidence, as Plaintiffs' Exhibits 98 and 99, respectively.

By Mr. Voland: We object to that as immaterial and irrelevant.

By The Court: Well, they may be received.

(Said documents, so offered and received in evidence, were marked respectively, PLAINTIFF'S EXHIBITS NOS. 98 and 99.)

By Mr. McCanna:

Q. Now, Mr. Brasile, do you recall the sales meeting down in Woodstock in June of 1953 attended by quite a sizable group?

1084 A. Yes, sir.

Q. From Brooks Supply Company?

A. Yes, sir.

Q. Will you tell us briefly about that?

A. Well, Mr. Frank Brooks and Carl Allen and I think Mrs. Frank Brooks were there, and a group of his salesmen come, unexpected.

Q. Some seven or eight?

A. Oh, every bit of that, yes, I would say.

Q. And they all came in there unexpectedly, did you say?

A. Yes, they were unexpectedly. We did not anticipate them.

Q. Do you know why they were there?

A. Well, Mr. Carl Allen knew of this movement that we were building, for many months. I mean, during the months of March, April, March, February. He wanted to see how far along we were and I think about a week or two prior to that meeting, I had a telephone conversation with Mr. Carl Allen saying that our movement was about completed; I hoped I could convince Mr. Mojonnier to build that type of equipment and apply it on his filler bowl.

1085 Q. Did you show Mr. Brooks and Mr. Allen and the salesmen any machine at that particular time?

A. Yes, sir.

Q. What machine?

A. That black one, next to the stainless steel (indicating).

Q. Defendants' Exhibit 33?

A. Yes, sir.

Q. Did you tell them anything about who was going to manufacture that machine?

A. No, not at that time I didn't.

Q. Did you tell them anything about how you proposed to construct it?

A. Oh—

Q. (Continuing) And what it would look like?

A. We had nobody—I mean, we couldn't build it. My intentions always were for Mr. Mojonnier, the Mojonnier Dawson Company, to build that machine.

Q. I hand you a photograph marked Plaintiff's Exhibit 85 and ask what you know about that.

A. Well, this is an artist's drawing of this model there (indicating).

Q. Defendants' Exhibit 33?

A. No. 33, that is right. We put a tank—an artist
1086 put this tank (indicating), he just faked it in there, he faked this accumulating table. We had no accumulating table unit. He faked it. He faked the panel in there (indicating) and the next, the top part of this is right there (indicating), the movement.

Q. And did he fake all the filling part there, too?

A. No. We had that old galvanized tank. Oh, he faked the tank and that, yes, sir. He faked it because he couldn't photograph the old galvanized tank.

Q. Who told him to do that?

A. I did, sir.

Q. And this is the product of your instruction, then, this drawing which is shown in this Plaintiff's Exhibit 85?

A. I don't understand you, sir.

Q. I mean, is this the result of what you told him to do?

A. The artist?

Q. Yes.

A. Yes, sir.

Q. Now what did you do with this photograph after you had it made?

A. I think we had some 35 or 40 of those made.
1087 When they came out, one—you get 50 as cheap as one, almost. And, they were sent back to me.

Q. You had 35 or 40 made?

A. That is right, or maybe more. I don't know the amount.

Q. Did you send any of these to Mr. Brooks of Brooks Supply Company?

A. Yes, I did, oh, to give them an idea what the completed machine would look like.

Q. You sent quite a sizable quantity to him, didn't you?

A. Well, he had—as I understood at that time, he had about seven or eight salesmen, but I think he requested about 25 of them. I think I gave him that.

Q. I hand you a paper bearing at the top the number X 590, June 26, 1953, and ask if you recognize that.

A. It is a purchase order given to Brooks Supply Company from a dairy by the name of Broadview Dairy, Topeka, Kansas. It was given to us through Brooks Supply, to U. S. Filler Company.

Q. I will ask then—

A. May I see that again, please?

By Mr. McCanna: I will ask the reporter to mark this
. Plaintiff's Exhibit 100 for identification.

1088 (Thereupon said document was marked Plaintiff's Exhibit No. 100 for identification.)

By Mr. McCanna: And I offer this in evidence.

By Mr. Voland: What is the origin of that document, Mr. McCanna? Is this from the files of one of these defendants? Where does it come from?

By Mr. McCanna: It comes from the Brooks Supply Company. We took a deposition on that, which we expect to put in this afternoon.

By Mr. Voland: Could we reserve the objection on that for the time being?

By Mr. McCanna: Yes.

By Mr. Voland: I don't want to be technical, but I would like to see the purpose of it.

1089 By Mr. McCanna:

Q. I hand you a letter on the heading of U. S. Carton Forming Corporation dated July 1, 1953 from H. L. Menzies of U. S. Carton Forming Corporation to Brooks Supply Company and ask whether you are familiar with that.

A. Yes, I am.

Q. Is that a letter which was sent out from you?

A. U. S. Carton Forming, yes, sir.

Q. Will you please read that letter?

A. (Reading):

"Brooks Supply Company,
Box 344
Joplin, Missouri.

"Attention Mr. Carl Allen.

"Dear Carl:

"We received your order No. X690 yesterday for one automatic Ex-Cell-O Pure-Pak carton filler for the Broadview Dairy at Topeka, Kansas.

"I am sure that you will recall that when you were last up here and talking to Mr. Brasile about this automatic Ex-Cell-O Pure-Pak carton filler, that he had re-
1090 quested that you take a deposit of one thousand dollars and forward it to us with each and every order for such a machine.

"We would appreciate very much if you would forward the one thousand dollars down payment for this machine so that we may enter it to be shipped as soon as the machine is available.

"With best regards, I am,

Very truly yours,

U. S. Carton Forming Corporation,
H. L. Menzies."

Q. Now here is a carbon copy of a letter dated July 6, 1953. Are you familiar with that? Isn't that a reply?

A. A reply to a letter—

Q. Of July 1, 1953?

A. Yes, sir.

Q. From U. S. Carton Forming Corp.?

A. Yes, sir.

Q. And do you know whether the original of that letter was received by U. S. Carton Forming Corp.?

1091 A. It must have been. Probably, yes, sir.

By Mr. McCanna: Will the Reporter please mark these, the letter, July 1, 1953, as Plaintiff's Exhibit 101 and the carbon copy of the letter dated July 6, 1953, as Plaintiff's Exhibit 102.

(Thereupon said documents were marked respectively Plaintiff's Exhibits Nos. 101 and 102 for identification.)

By Mr. McCanna: I offer these in evidence.

By Mr. Voland: There is no objection. We will withdraw the objection to the previous exhibit too.

By the Court: Are those offered? I say, are they offered?

By Mr. McKnight: Yes, sir.

By Mr. McCanna: Yes, sir. I offered them.

By the Court: They may be received.

(Said documents, so offered and received in evidence, were marked respectively, PLAINTIFF'S EXHIBITS NOS. 100, 101 and 102.)

1092 By Mr. McCanna:

Q. Mr. Brasile, are you acquainted with Paper Pack Corporation?

A. When?

Q. Well, at any time?

A. Oh, sometime in July, June of 1953. At the present, I am not. At present, I am not acquainted with them.

Q. Do you know who formed Paper Pack Corporation?

A. Who formed it?

Q. Yes.

A. Truthfully, I don't.

Q. Do you know whether Mr. Albert A. Lewis is connected with that company?

A. I heard he was.

Q. Did you have any business dealings with Mr. Lewis in connection with Paper Pack Corporation?

A. Business dealings?

Q. Yes. I mean, with reference to fillers.

A. No, sir.

Q. None whatsoever?

A. No, sir.

Q. No connections of any kind regarding fillers for filling milk into paper cartons?

1093 A. No, sir. You asked me if I dealt with Mr. Lewis.

1094 Q. No, I ask you if you had any kind of a connection of any kind whatsoever with him or his company, this Paper Pack Corporation.

A. That is a little different. Yes, I had—

Q. You still say "No," is that correct?

A. No, I say—

Q. What is correct?

A. I said that I had some connection with Mr. Lewis about sometime in July with Paper Pack.

Q. Is that 1953?

A. That is right, sir.

Q. Will you please tell what they were?

A. Well, that company was going to sell a filler—that was sometime in the middle of July, I think it was— a filler that was to be manufactured by the Ex-Cell-O Corporation. If not, by another company in Chicago.

Q. Who told you that?

A. Pardon?

Q. Who told you that? How did you learn that?

A. Well, when that machine came back and the filling principles were wrong—

Q. You mean Defendants' Exhibit 33?

A. 33, that is right. I think they came back in
1095 the latter part of June. I don't remember the date.

Mr. Andre thought that some modifications could come from that, and they can and they will be able to supply tanks. As a matter of fact, they had Mojonnier-Dawson's tank on that filler making tests, too, in the Ex-Cell-O Corporation plant.

Q. You mean Ex-Cell-O people, when they had this model, Defendants' Exhibit 33, had put the Mojonnier-Dawson—

A. Yes, sir.

Q. (Continuing.) —filling unit on it?

A. Yes, sir, that was on.

Q. With the electronic timer?

A. Yes, sir.

Q. Where did you learn that?

A. I was present, sir.

Q. Oh, you were present when it was done?

A. Yes, sir.

Q. Please tell us about that. That is very interesting.

A. Well, they had a tank and a timer and a float there.

Q. You mean of the manufacture—

A. Manufactured by Mojonnier-Dawson. I guess
1096 they bought it from them or bought it from somebody.

Q. And so they rigged it up on your machine, is that right?

A. On that closing machine, that is right, sir.

Q. Who did that, if you know?

A. I wouldn't know. When I came there it was there, and a fellow by the name of Ferguson, he is an installation man, and he mentioned that they tried filling containers with the Mojonnier-Dawson filler in connection

with that operation. How long, how many bottles, I wouldn't know, sir.

Q. But you were there and saw it?

A. I didn't see the filler on top, but when he mentioned that, I happened to see a Mojonnier-Dawson filler in their lab plant, a lab room where they make their tests.

Q. And they told you they had taken—

A. This Mr. Ferguson did, yes, sir.

Q. (Continuing.) The Mojonnier-Dawson Electromatic filler and substituted on your machine?

A. On our filler.

Q. Defendants' Exhibit 33, and then operated it?

A. I wouldn't know if they operated it or not, sir.

Q. Oh, they just put it on?

1097 A. That I couldn't even tell you, but he told me that they tried filling containers with water with the Mojonnier-Dawson filler, and used this machine to seal it.

Q. And weren't you interested enough to find out how that worked with your movement parts?

A. Oh, it was a very discouraging letter. The movement part wasn't very satisfactory.

Q. Now, let's get to this Paper Pack Corporation. I hand you a circular entitled "Here is the Long Awaited Completely Automatic Filler. Fills Pure-Pak Cartons Automatically, All Sizes, Half Pints to Half Gallons."

What do you know about that?

A. Well, I helped set this brochure up, yes, sir.

1098 Q. Now the picture on the front of that brochure, isn't that the same picture as this artist drawing you had made?

A. Yes, sir.

Q. The identical drawing?

A. Yes, sir.

Q. And that was put out by Paper Pack Corporation?

A. Yes, sir.

Q. Here is another circular or brochure—

First let's have this one that you have just identified marked as Plaintiff's Exhibit 103 for identification.

(Thereupon said document was marked Plaintiff's Exhibit No. 103 for identification.)

By Mr. McCanna:

Q. Here is another circular which has the heading on the front "Here is the long awaited semi-automatic filler for Pure-Pak cartons, all sizes, half pints to half gallons."

A. Yes, sir.
Q. What do you know about that?
A. Well, that is a photograph of our first model, experimental model filler.
1099 Q. Of Plaintiff's Exhibit 40 over there?
A. 40, yes, sir, that is right.
Q. And who compiled this?
A. I did, sir, and the Pontiac Engraving.
Q. And that bears the name on the back Purity Pack Corporation?
A. Yes, sir.
Q. Is that one of your corporations?
A. Yes, sir.
Q. And this Paper Pack Corporation, that is one of Mr. Lewis', isn't it?
A. Well, if it is I wouldn't know at the present time. I don't—
Q. Well, I am asking now how it comes that you were preparing for Paper Pack Corporation a brochure featuring your machine and offering it to the trade?
A. Well, featuring whose machine?
Q. Isn't that your machine on the front page?
A. Yes, that is our movement there, yes, sir.
Q. And this is your company, Paper Pack Corporation?
A. No, sir.
Q. Then how did that get into print?
1100 A. Well, I just helped Mr. Lewis come up with a brochure, but it is not my company, sir.
Q. You mean you are sending brochures like this out to the trade?
A. Well, I will tell you, Mr. McCanna. After we were cut off from the Mojonnier-Dawson fillers, we had no production for fillers, nothing to sell. We had a plant in Woodstock that a bunch of small stockholders invested as high as $87,000.00. We had to do something.
As far as we went was the movement at that time. The great Ex-Cell-O Corporation was very kind to us and said that probably we can supply you with tanks, manufactured by the General Equipment Company out of Minneapolis. This is how this was started.
By Mr. McCanna: Will the Reporter please mark this second circular as Plaintiff's Exhibit 104 for identification?
(Thereupon said document was marked Plaintiff's Exhibit No. 104 for identification.)

By the Witness: I think that brochure was made sometime in July, late July—

1101 By Mr. Voland: What year?

By the Witness: 1953.

By Mr. McCanna:

Q. You are referring to the one marked Plaintiff's Exhibit 103?

A. That is right, sir.

Q. This one marked Plaintiff's Exhibit 104, when was that made up?

A. I would say that was made up sometime in, oh, this is the semi-automatic—we used that copy, it must have been sometime in October. Yes, sometime in October or November. Somewhere around September, somewhere around that, much later than that.

Q. This Purity Pack Corporation is one of your companies, is it?

A. Yes, sir.

Q. Was this brochure, Plaintiff's Exhibit 104, ever sent out to the trade?

A. Yes.

Q. I mean the dairy trade?

A. Yes, sir, [illegible] jobbers.

By Mr. McCanna: I offer these brochures in evidence as Plaintiff's Exhibits 103 and 104.

1102 By Mr. Clement: No objection.

By Mr. Kipnis: No objection.

By the Court: They may be received.

(Said documents, so offered and received in evidence, were marked respectively PLAINTIFF'S EXHIBITS NOS. 103 and 104.)

1103 By Mr. McCanna:

Q. I hand you a photostatic copy of a paper entitled "Assignment of Invention," dated June 30, 1953, and ask what you know about that.

A. I signed it.

Q. You signed it on that date, June 30, 1953?

A. Yes, sir.

Q. Tell us how you came to sign that, please.

A. Well, Mr. A. Lewis, who I met in the latter part of May, who got quite interested in our organization—I mean the U. S. Carton Forming Corporation—which at that time was in great need of financial aid due to the fast expan-

sion, the demand for formed Pure-Pak bottles in a dry plant because 90 per cent of your Board of Health Departments and the Ex-Cell-O Company didn't want us to form bottles in a wet plant. By a wet plant I mean it is a plant, a dairy plant, where they lease an Ex-Cell-O machine, and they might not have the full capacity at times, so we would then ask if they would like to run two or three hours a day for us, without putting milk in and no staples, pack them and ship to customers that we sold fillers to.

Those fillers I am talking about are the Mojonnier-Dawson fillers because without bottles the fillers aren't—

1104 are not in need.

Mr. A. Lewis, at a meeting sometime in early June, at which was present Mr. Charles Patton, Joseph DeTolve, Michael DeTolve, Mr. A. Lewis, and myself—we were eating in Otto's Restaurant in Forest Park, Illinois.

Q. That was in 1953?

A. That is right, early part of 1953. I told him that it would be possible to get in the manufacturing of that movement—

Q. Over here on Defendants' Exhibit 33?

A. That is right, sir.

Q. You told Mr. Lewis?

A. That is right. In order to get immediate production, it would take about $25,000 to set up a company to manufacture these fillers. It was, at that time it looked like the Mojonnier-Dawson people were going to cut us off on delivery of equipment, and we wanted to prepare ourselves. We had men that invested sums of $1,000, $500, $2,000, in our forming plant. That was the life-long earnings of theirs, invested into that type of operation, and my duty was to protect them as the president of that company I was going to do it.

1105 So I told Mr. Lewis that it is possible that the Ex-Cell-O Corporation would supply tanks for that filler or machine, that movement. The way that filler was assembled in between, between that and the time it was up in Ex-Cell-O, when we pressed fit a fitting on the outside barrel and put a stem in there, it came to me, when Mr. Richardson came back, I says, "Jack, by golly, if we set a float in there, we probably could make a filler."

He says, "I think you are right."

So after that meeting Mr. Lewis agreed to it, that I would become 50 per cent owner, owner of 50 per cent of

the stock of this Pack Equipment, and he would put in $25,000.

Immediately that day, he had a patent attorney making a survey, checking the machine and seeing what was patentable on this movement, and that. I thought it would be possible to patent it, and that is the start of it.

1106 Q. Now this assignment refers to an invention which is described as "A semi-automatic and automatic filler for containers"?

A. Yes, sir.

Q. Is that your invention?

A. That is right. It is very possible, without the pusher, the automatic pusher and without a motor, without cams, we could slide that container, just like the operation we got at present in the court room, Exhibit 40, eliminating the cams, pusher bars, et cetera. It is the same operation.

Q. Now you are talking about the movement, aren't you?

A. That is right.

Q. But this assignment says a filler.

A. I just got through saying to you, sir, that I said to Jack that it is possible that we could make a filler.

Q. Oh, yes.

A. At the time of signing that, there was no filler available then.

Q. Well, now, Mr. Brasile, this invention that you are talking about in this assignment, which is dated June 30, 1953.

1107 A. Yes, sir.

Q. (Continuing): Is the invention that is over in that model, Defendants' Exhibit 33?

A. That is right.

Q. And you assigned that invention to Pack Equipment Corporation?

A. Right, sir.

Q. Is that one of your companies?

A. No, sir.

Q. Is that one of Mr. Lewis' companies?

A. I don't know at the present time.

Q. Well, at that time, on June 30, 1953, what did you know about Pack Equipment Corporation?

A. I just got through telling you.

By Mr. Voland: I submit the witness has answered that question.

By the Court: Who if anyone designated Pack Equipment Company as the assignee?

By the Witness: Pardon, your Honor?

By the Court: Read the question, please.

(Whereupon the question was read as above recorded.)

By the Witness: You mean who assigned it?

1108 By the Court: Answer that specific question, sir. Read the question to him again.

(Whereupon the question was again read as above recorded.)

By the Witness: Mr. A. Lewis.

By Mr. McCanna:

Q. And do I understand you correctly to say that you received $25,000.00 in stock in consideration for making this assignment?

A. I did not.

Q. Well, what did you receive in consideration of making this assignment?

A. Nothing.

Q. *Did you ever file an application* for patent on this invention?

A. On this invention?

Q. The one that is described.

A. No, sir.

Q. The one described in this assignment?

A. Well, Mr. Lewis' patent attorney came up, but how far it went, I don't know.

By Mr. McCanna: I believe, your Honor, it is of some interest and it is material here for someone to inspect

1109 that application for patent.

By Mr. McCanna:

Q. Was there an application for patent filed?

A. Well, we revised that model after I went out on my own in Milk Container Equipment.

Q. You mean the one, Defendants' Exhibit 33?

A. We revised that filler.

Q. That became Plaintiff's Exhibit 40?

A. That is right, sir. Then I employed a patent attorney, Mr. Howard Clement, from there on.

Q. And he filed an application for patent on that?

A. Yes, sir.

By Mr. McCanna: If your Honor please, I think I will withdraw that question. I think he has established—

By the Court: You what?

By Mr. McCanna: The question about pursuing that application for patent.

By the Court: Very well.

By Mr. McCanna: I have only a couple of questions here.

By Mr. McCanna:

Q. Mr. Brasile, how did Milk Container Equipment
1110 Corporation acquire the right to manufacture your filler?

A. I assigned it to Milk Container Equipment Corporation.

Q. You assigned that to them?

A. That is right, sir.

Q. By a written assignment?

A. Yes, sir.

Q. Is that the application for patent that you are talking about?

A. Yes, sir.

Q. And does that show a filler in it? Does that application for patent show a filler?

A. Yes, sir.

Q. *Is it the filler that is in* Plaintiff's Exhibit 40?

A. Yes, sir.

Q. I hand you a paper marked Plaintiff's Exhibit 61, dated July 7, 1953, and ask whether you received the original of that?

A. Yes, I am familiar with it, sir.

Q. Did you receive the original?

A. Yes, sir—not personally, but our company did and I read it, that is right, sir.

1111 Q. And is this the notice that caused the termination of relations between—

A. Yes, sir.

Q. (Continuing): —between your companies and Mojonnier-Dawson Company?

A. Yes, sir.

By Mr. McCanna: That is all.

By Mr. Voland: May we have a short recess at this time, your Honor?

By the Court: Yes, we will take a short recess.

(Whereupon a short recess was taken.)

1112 *Cross-Examination by Mr. Kipnis.*

Q. Mr. Brasile, did you testify that Mr. Lewis accompanied you on some visits to suppliers?

A. Like pleasure visits, just to see what we were doing.

Q. Where did he go with you?

A. The Pavitch—

Q. Pavitch?

A. Pavitch Stapling, located on Grand Avenue.

Q. In Chicago?

A. West of Western Avenue, Chicago.

Q. And where else?

A. I don't remember him going to—I know he didn't go with me to John S. Barnes, John S. Barnes & Company, no.

Q. As a matter of fact, that was the only place he went with you, isn't that right?

A. That is right.

Q. And when was that?

A. Oh, I would say in the early part of June.

Q. Of 1953?

A. Right, sir.

Q. And wasn't that for the purpose of trying to get a new hydraulic unit?

A. That is right, sir. It was for the purpose of
1113 converting the foot operation of Mojonnier-Dawson to make it automatic.

Q. I see.

A. That's right.

Q. At that time, you had a lot of complaints, didn't you, from customers who had purchased the Mojonnier-Dawson machine—

A. That is right.

Q. —about that operation?

A. That is right.

Q. And you were trying to satisfy those customers?

A. That is right. I thought it was my idea that if we applied a perfect amount of pressure to the top of the container, it would solve our problem.

Q. What was the problem the customers were having?

A. Well, they had top leaker troubles.

Q. With the Mojonnier-Dawson stapler, is that right?

A. Yes.

Q. And you were trying to find a new stapler that would cure that defect?

A. A stapler and a new mechanical device to do it.

Q. And that is what Mr. Lewis was interested in?

A. That is right, sir.

Q. To satisfy the customers who had bought Mo-
1114 jonnier-Dawson machines, isn't that right?

A. That is right.

Q. Mr. Brasile, is Mr. Lewis a stockholder in Purity Pack Corporation?

A. No, sir.

Q. Is he an officer of Purity Pack Corporation?

A. No, sir.

Q. Is he financially interested in Purity Pack Corporation in any way?

A. No, sir.

Q. Has he any connection at all with the management of Purity Pack Corporation?

A. No, sir.

Q. Has he had any connection with the management of Purity Pack Corporation?

A. No, sir.

Q. I will ask you the same questions with respect to Milk Container Equipment Corporation.

A. No, sir.

Q. He has no connection whatever with that corporation?

A. No, sir.

Q. How about U. S. Dairies Sales Corporation?

A. The same.

1115 Q. Mr. Lewis has no connection whatsoever with U. S. Dairies Sales Corporation?

A. No, sir.

Q. Now Mr. Brasile, does U. S. Filler Equipment, Incorporated, have any connection at all with Purity Pack Corporation?

A. No, sir.

Q. Does U. S. Filler Equipment have any connection whatever with Milk Container Corporation?

A. No, sir.

1116 Q. Does it have any connection with the U. S. Dairies Sales Corporation?

A. No, sir.

Q. What is your answer with respect to the relationship of U. S. Carton Forming Corporation and the three

corporations I last mentioned? Is there any connection at all?

A. Between—

Q. U. S. Carton Forming Corporation and Purity Pack?

A. No, sir, none whatever.

Q. How about Milk Container Corporation?

A. No, sir.

Q. How about U. S. Dairies Sales?

A. None.

Q. How about Paper Pack Corporation? Is there any connection between that corporation and Purity Pack Corporation?

A. None whatever.

Q. Is there any connection between Paper Pack Corporation and Milk Container Equipment Corporation?

A. None.

Q. And how about U. S. Dairies Sales?

1117 A. None whatsoever.

Q. Is there any connection whatever between Pack Equipment Corporation and these three corporations of yours?

A. No, sir.

Q. Mr. Brasile, you identified a voting trust agreement between Mr. Lewis as trustee and Preformed Carton Corporation, shareholders, which is in evidence as Plaintiff's Exhibit 94. That document was signed on July 10, 1953. Since that date, has there been any change at all in the officers of Preformed Carton Corporation?

A. Yes, sir.

Q. What change has taken place?

A. Well, I used to be president of the corporation but I am not any more.

Q. When did you resign as president of the corporation?

A. In December of 1953.

Q. You ceased having all connection with the management of that corporation in December, 1953, is that right?

A. Yes, sir.

1118 Q. I call your attention to the voting trust agreement dated July 10, 1953 between Mr. Lewis and you as trustee—I am sorry, between Mr. Lewis as voting trustee and you, Pauline R. Brasile, and Eugene Blum as owners of all of the capital stock of U. S. Filler Equipment, Incorporated.

After this agreement was signed, was there any change made in the management of U. S. Filler Equipment, Inc.?

A. I am not president any more. I was, but I have nothing to do with it at the present time.

Q. When did you cease to be president of U. S. Filler Equipment, Incorporated?

A. At the same time, around July 30th.

Q. Around when?

A. I mean, December 30th. I am sorry.

Q. Around December 30, 1953?

A. Right.

Q. Since then, you have had nothing to do with the management of this corporation, is that right?

A. No, sir.

Q. Calling your attention to the voting trust agreement Plaintiff's Exhibit 93, between Mr. Lewis and yourself
1119 as trustees and U. S. Carton Forming Corporation. Subsequent to—that is dated June 23, 1953. Subsequent to that date, has there been any change in the management of U. S. Carton Forming Corporation?

A. Yes, there has.

Q. Are you still an officer of U. S. Carton Forming Corporation?

A. No, sir.

Q. You were president at the time?

A. I was.

Q. And when did you cease to be president?

A. I think it was very shortly after that I ceased. The stockholders had a meeting and they voted me out as president. And then, I resigned in December of 1953.

Q. And since December, 1953, have you had anything at all to do with the management of U. S. Carton Forming Corporation?

A. No.

Q. I believe you testified that you operated under the voting trust agreement, Plaintiff's Exhibit 93, involving U. S. Carton Forming Corporation for a short time?

A. Yes, sir.

1120 Q. Can you give me the time during which you operated under that agreement?

A. About a month or so.

1121 Q. And when you say you operated under it, what do you mean, you continued to act—

A. I continued in my capacity, that is right.

By Mr. Voland: What was the answer? I didn't hear it.

(Whereupon the answer was read as above recorded.)

By the Witness:

A. (Continuing.) In my capacity as a sales manager, helping in the production and transportation and that.

By Mr. Kipnis:

Q. Now you stated that in the middle of July, you were unable to get fillers. Was that the middle of July, 1953, when you started to have difficulty getting fillers?

A. Did I say the middle of July?

Q. Maybe I am wrong.

A. The middle of June.

Q. I see. The middle of June, 1953?

A. That is right.

Q. What happened at that time?

A. Pardon?

Q. What happened then?

1122 A. Well, we owed the Mojonnier-Dawson Company and I don't know the exact figures, about $69,000, and from the middle of May to the time the contract was terminated, we were not threatened; we were told that if we didn't get a great sum of money into the Mojonnier-Dawson Company that they were going to cut off our supply.

Q. Well, Mojonnier-Dawson cut off your s ply did they?

A. Well, he didn't deliver too many fillers in that period.

Q. Ultimately he did, ultimately Mojonnier-Dawson Company did cut off your supply, didn't they?

A. Yes, he did.

Q. Do you know when that was?

A. In the last week in June. I think it was the exact—June 26th.

By Mr. Kipnis: Mr. McCanna, do you have the exhibit that is a circular?

(Handing document to counsel.)

By Mr. Kipnis:

Q. Mr. Brasile, I hand you the circular which is in evidence as Plaintiff's Exhibit 103, put out by Paper Pack Corporation. Do you know when that circular

1123 was distributed to the trade?

A. Yes. I am not sure of the exact date, but I thought it was sometime in the middle of July.

Q. Of 1953?

A. That is right, sir.

Q. Do you know whether more than one distribution was made? Was there just one?

A. Just one, yes, sir.

Q. Do you know how many were distributed?

A. Quite a few, say around eight or nine thousand.

Q. At the time you prepared this circular, Plaintiff's Exhibit 103, what was your relationship with Paper Pack Corporation, if anything? Were you connected with that corporation at that time?

A. Well, I knew that it was owned by A. A. Lewis, that's all.

Q. I see. Well, was this circular distributed by Paper Pack Corporation after you severed your connections with U. S. Filler and U. S. Carton Forming Corporation?

A. Yes, sir.

Q. And after you had your own companies, do you know whether this circular was distributed after you had formed your own companies?

1124 A. No, sir. It was, before.

Q. Before? Oh.

Mr. Brasile, do you know whether a machine like that illustrated in Plaintiff's Exhibit 103 was ever manufactured?

A. Never.

Q. Was it ever sold?

A. Never.

By Mr. Kipnis: Excuse me, your Honor. I just want to confer a minute.

That's all for me, your Honor.

By Mr. McCanna: That's all.

By Mr. Kipnis: Just a minute.

Mr. Voland wants to ask some questions.

By Mr. McCanna: I thought we were going to confine the examination to one attorney in connection with the witness.

By Mr. Voland: I think what the Court said was that there would be one attorney for one group of defendants.

By the Court: Yes. Go ahead.

1125 *Cross-Examination by Mr. Voland.*

Q. Mr. Brasile, will you tell the Court briefly what your educational background is.

A. I graduated grammar school, St. Luke's Grammar School and went two years to high school.

By the Court: Now you are examining as what, cross?

By Mr. Voland: Mr. McCanna didn't call this witness under the statute, but I assume he meant to.

By the Court: I realize that, but what right are you exercising?

By Mr. Voland: I am cross-examining Mr. Brasile.

By the Court: Go ahead.

By Mr. Voland:

Q. Mr. Brasile, I would like you to direct your attention to June 1st of 1953.

By the Court: How long is your cross going to take?

By Mr. Voland: I doubt if we can conclude today, your Honor, but I don't think we will need much time after
1126 today, perhaps a total of an hour.

By Mr. Voland:

Q. As I understand your testimony, at that time, Mr. Brasile, you were—

By the Court: Are you going to put his case in on cross or—

By Mr. Voland: No, sir. We expect to put it in on our own case.

By the Court: All right.

1127 Q. As I understand it, at that time, Mr. Brasile, you were a minority stockholder and an officer of U. S. Carton Forming Corporation, isn't that right?

A. Yes, sir.

Q. And that company, or U. S. Filler, was at that time buying filler machines from the Mojonnier-Dawson Company and reselling them, isn't that correct?

A. Yes, sir.

Q. And that arrangement came to an end very shortly after that, didn't it?

A. Yes, sir.

Q. That was your testimony?

A. That is right.

Q. As of June 1st, you had just recently made the acquaintance of Mr. Lewis, as I understand your testimony, is that correct?

A. No. It was—I met Mr. Lewis about the last week of May.

Q. Well, that is just shortly before June 1st, isn't it?

A. That is right, sir.

Q. Now, as of June 1st, there wasn't any U. S. Dairies Sales Corporation, was there?

1128 A. No, sir.

Q. There wasn't any Milk Container Equipment Corporation, was there?

A. No, sir.

Q. There wasn't any Purity Pack Corporation, was there?

A. No, sir.

Q. Those are the three companies you are presently associated with, isn't that right?

A. Yes, sir.

Q. As of June 1st, was there a Paper Pack Corporation, if you know?

A. Shortly after.

Q. As of June 1st, was there?

A. Shortly after.

Q. As of June 1st, was there a Pack Equipment Corporation, if you know?

A. Shortly after, sir.

Q. Would it be correct to say that of the corporations which have been mentioned here, the only ones in existence on June 1st were Preformed Carton Corporation, U. S. Filler and U. S. Carton, is that correct?

A. Yes, sir.

1129 By the Court: That is what year?

By Mr. Voland: 1953.

By Mr. Voland:

Q. All these questions have relation to 1953.

A. 1953, that's right, sir.

Q. Now, sir, will you also explain to the Court what the condition of the development of your experimental filler was as of June 1st, and I am referring to this Defendants' Exhibit 33, as of June 1st, 1953?

A. The condition?

Q. Yes, how far along was it?

A. As you see it now, sir.

Q. And that was all you had done toward the development of the filler at that time, isn't that correct?

A. We didn't develop a filler at that time.

Q. Well, you developed that, hadn't you?

A. Well, that is, to me, it wasn't a filler on June 1st, sir.

Q. At all events, what we see here is what you had on June 1st, 1953?

A. Yes, sir.

1130 By the Court: What we see here is what, Exhibit 33?

By Mr. Kipnis: That is right.

By Mr. Voland: Defendants' Exhibit 33.

By Mr. Voland:

Q. Now I believe you also testified that it was quite clear as of June 1, 1953, that this contract with Mojonnier-Dawson Company was about to be terminated, isn't that correct?

A. That is right.

Q. Now, did Mr. Lewis' appearance on the scene have anything to do with that situation, namely, the threatened termination of that contract?

A. No.

Q. Do you understand my question, Mr. Brasile? Did Mr. Lewis come into the picture because of any difficulties that you were in?

A. Oh, we were—

1131 Q. Would you answer the question first yes or no?

A. Yes, he did.

Q. How was Mr. Lewis introduced to you?

A. I was introduced to Mr. Lewis in the last week of May.

Q. By whom?

A. By Mr. Joseph DeTolve

Q. And did Mr. Lewis state his business to you at that time, his interest in your business?

A. No, he didn't.

Q. He did not?

A. No.

Q. As your discussions with Mr. Lewis developed or progressed, did he indicate an interest in your business in some way, that he would like to take an interest in it?

A. He did.

Q. What did he tell you about that?

A. He thought it had great possibilities, and he also said that he would be very interested, and that is the reason why he was brought up, knowing that the company needed money for expansion. We were moving awful fast.

We needed plants for preforming, dry plants, to pre-

1132 form the empty Pure-Pak containers, and he thought it had great possibilities.

He said to me personally, and also said to the other

stockholders, that he would be willing to put up as high as $250,000 immediately into the company.

Q. Will you also explain to the Court, Mr. Brasile, why money in such large amounts was necessary for the preforming of cartons, if it was necessary?

A. Yes, sir.

We, the U. S. Carton Forming Corporation, the stockholders, put up $87,000. We bought a building in Woodstock, Illinois to set preforming machines that are leased from the Ex-Cell-O Corporation.

Being a new company, the Ex-Cell-O Corporation asked or demanded advance deposits on future orders. We gave them an order for 15 more forming machines to be delivered one, two or three or four each month, and at various destinations, as we found the destinations. The destinations we were going to use, which were of great help to us, we have a stockholder whose name is Emory Moore, and he is the owner and president of the Fiddes & Moore Plywood business. He has somewhat like 20-odd warehouses throughout the United States, large ware-
1133 houses, and he thought that we could put a preforming plant in his warehouses.

Well, that stopped—I mean, that eliminated us looking for buildings. Well, the delivery of the Ex-Cell-O machines was quite slow then, the type of machines we wanted, because we anticipated putting a machine, two machines to each state.

The reason for putting two machines in each state—

1134 Q. Mr. Brasile, let me see if I can shorten this up a little bit.

In the early days of your enterprise with Preformed Carton Corporation, you obtained your cartons, as I understand it, by having them formed in wet dairy plants during the idle hours of these big preforming machines, isn't that correct?

A. That is right, sir.

Q. And as this enterprise developed and took the form of U. S. Filler and U. S. Carton, you were attempting in response to the demand from the Public Health Service and the—

A. Well, to start out—

Q. Let me finish. You were then attempting to preform these cartons in a dry plant, isn't that correct?

A. That is right.

Q. Which meant you had to have the preforming machine—

By Mr. McCanna: Your Honor, I think the witness ought to testify.

By Mr. Voland: This is preliminary matter, if the Court please.

1135 By the Court: Let's get along. The witness does have difficulty coming to the point, and I will let anybody help him to the point.

By Mr. Voland: Mr. McCanna has thrown in a great deal of confusion, not unintentionally, and I hope I can straighten it out, if the Court please.

By the Court: Well, he has had help.

By Mr. Voland: And how.

By Mr. Voland:

Q. Now, Mr. Brasile, again directing your attention to the month of June, 1953, it was during that month that this machine was sent up to Ex-Cell-O Corporation, wasn't it?

A. That is right, sir.

Q. And that was Defendants' Exhibit 33?

A. Yes.

Q. And that was the first time any machine was shipped up to Ex-Cell-O Corporation, isn't that correct?

A. Yes.

By Mr. Voland: May I have your Plaintiff's Exhibit 105, please?

Do you want to offer it now?

1136 By Mr. McCanna: Yes, I omitted to offer this assignment of invention, and I now offer it and will ask the Reporter to please mark it as Plaintiff's Exhibit 105.

By the Court: Any objections?

By Mr. Voland: No objection.

By the Court: It may be received.

(Said document, so offered and received in evidence, was marked PLAINTIFF'S EXHIBIT NO. 105.)

By Mr. Voland: May I have your Exhibits 93 to 95, the voting trusts.

By Mr. Voland:

Q. Mr. Brasile, I show you a document which has already been marked as Plaintiff's Exhibit 93 for identification on this record, being a copy of a voting trust agreement pertaining to shares of U. S. Carton Forming Corporation. Will you look at it, please?

A. Yes, sir.

Q. I will ask you if that was signed by you on or about the date it bears?

A. Well, not exactly the same date.

1137 Q. Approximately?

A. Approximately, yes, sir.

Q. Can you tell me what were the circumstances which led up to the preparation and signing of this agreement, Mr. Brasile?

A. Well, we were promised by Mr. A. A. Lewis that he would put up $250,000.00 in our company, the U. S. Carton Forming Company, which was in great need at the time for expansion program and everything else.

And he said to us, not only he, his attorney, said that in order for him to put up the money, those trust agreements had to be signed.

Q. Who prepared Plaintiff's Exhibit 93, if you know, Mr. Brasile?

A. The attorney, Mr. Lansing.

Q. Did he represent Mr. Lewis?

A. Yes, he did.

Q. Mr. Brasile, I hand you a document which has already been marked on this record as Plaintiff's Exhibit 94 for identification, being a copy of the voting trust agreement pertaining to shares of stock of Preformed Carton Corporation, dated July 10, 1953, and ask you to look

1138 at it and tell me whether you signed it on or about the date it bears?

A. Yes, sir.

Q. I will show you a document which has already been marked on this record as Plaintiff's Exhibit 95 for identification, also dated July 10, and being a copy of a voting trust agreement pertaining to shares of stock of U. S. Filler Equipment, Inc., and ask you if you signed that agreement on or about the date it bears?

A. Yes, sir.

1139 Q. Were those two agreements executed by you in reliance upon the representations which you have described as made by Mr. Lewis in connection with the first Voting Trust Agreement, the one on U. S. Carton?

A. No, sir.

Q. They were not?

A. No, sir.

Q. Do you understand my question, Mr. Brasile?

When you executed those two papers, were you relying upon the promises Mr. Lewis had made?

A. Yes, sir.

Q. Did Mr. Lewis put up the money that he had promised?

A. No, sir.

Q. I show you a document which has already been marked as Plaintiff's Exhibit 105 on this record, being an assignment of inventions, dated June 30, 1953, and ask you whether you signed that document on or about the date it bears.

A. I did.

Q. Will you tell the Court again, please, what statements or promises Mr. Lewis made to you in order to obtain the execution or signing of that paper?

1140 A. He promised me that I would become a 50 per cent stockholder of this company, and that he would put into this company $25,000 to enable the company to go in the manufacturing of fillers or sealers.

Q. Who prepared that agreement, do you know?

A. I really don't know.

Q. Is there a name on it?

A. Not on this agreement, no, sir. I think there is a patent attorney, Louis Bernat.

Q. He is Mr. Lewis' patent attorney, isn't he?

A. That is right.

Q. Did you ever receive any stock in this Pack Equipment Corporation?

A. No, sir.

Q. Now, Mr. Brasile, did you at any time after signing that assignment of invention have occasion to address a notice to Mr. Lewis and to Pack Equipment Corporation rescinding that assignment?

A. I did.

By Mr. Voland: I will ask the reporter to mark this document as Defendants' Exhibit for identification No. 34.

(Thereupon said document was marked Defendants' Exhibit No. 34 for identification.)

1141 By Mr. Voland:

Q. I show you the document which has been marked Defendants' Exhibit 34 for identification, dated August 31, 1953, and ask you if that is a copy of the paper to which you have just referred.

A. It is.

Q. Did you sign the original of that in my office, Mr. Brasile?
A. Yes, sir.
Q. What did you do with it then?
A. I had it mailed immediately.
Q. Did you mail it?
A. No, I think my attorney took care of that.
Q. That was I, wasn't it, Mr. Brasile?
A. That is right.
Q. You asked me to mail it, didn't you?
A. That is right, sir.
Q. And do you know whether it was mailed?
A. Yes, sir.
Q. You sent two copies, did you not, one to Mr. Lewis and one to Pack Equipment Corporation?
A. That is right, sir.
Q. Now subsequent to the execution of this voting trust agreement, Mr. Brasile, I believe you testified that
1142 you served written notice of the rescission of those agreements on Mr. Lewis and the other parties. That you testified to this morning, did you not?
A. That is right.
By Mr. Voland: I will ask the reporter to mark this as Defendants' Exhibit 35 for identification.
(Thereupon said document was marked Defendants' Exhibit No. 35 for identification.)

By Mr. Voland:

Q. Mr. Brasile, I hand you a document which has been marked as Defendants' Exhibit 35 for identification, and ask whether you can identify that paper.
A. That is the paper rescinding the trust agreements.
Q. It is a copy of a letter, isn't it, Mr. Brasile?
A. That is right.
Q. Did you direct me to send the original?
A. I did.
Q. Of which this is a copy?
A. Yes, sir.
By Mr. Voland: I would like to read this document to the Court, if I may, please.
1143 It is dated January 8, 1954, addressed to Mr. A.

A. Lewis, 291 Marshman Avenue, Highland Park, Illinois:

"Dear Sir:

"We wish by this letter to confirm, on behalf of our clients, Maurice J. Brasile and Eugene Blum, that they and each of them have elected to rescind and have rescinded a certain agreement entitled 'Voting Trust Agreement Pertaining to Shares of Stock of Preformed Carton Corporation' executed by them under date of July 10, 1953, and that accordingly the said agreement is wholly void and of no effect whatever. On behalf of our said clients we therefore demand that you deliver to each of them all certificates for shares of the capital stock of Preformed Carton Corporation, an Illinois corporation, issued in their respective names and by each of them endorsed and delivered to you as Trustee under said agreement."

1144 I should also like to read to the Court the document which has been marked as Defendants' Exhibit 34 for identification, dated August 31, 1953, addressed to Pack Equipment Corporation, care of Mr. J. S. Morris, Registered Agent, Suite 1532, 33 North La Salle Street, Chicago 2, Illinois, and Mr. Albert Allen Lewis, 291 Marshman Avenue, Highland Park, Illinois.

"Please Take Notice that I have elected to rescind, and hereby do rescind, a certain 'Assignment of Invention' executed by me under date of June 30, 1953, purporting among other things to assign to Pack Equipment Corporation, a corporation, the inventions in a semi-automatic and automatic filler for containers, and also a certain royalty agreement in the form of a letter addressed to me by Pack Equipment Corporation under date of June 29, 1953, and that accordingly the said 'Assignment of Invention' and the said royalty agreement are, and

1145 each of them is, wholly null and void and of no effect whatever."

This is signed by Maurice J. Brasile.

By Mr. Voland:

Q. Mr. Brasile, did you at the same time that you served notice to rescind the voting trust agreements of U. S. Carton Corporation, did you serve similar notices to rescind the voting trust agreements on U. S. Filler and Preformed Carton Corporation?

A. I did.

By Mr. Voland: I will ask the Reporter to mark these as Defendants' Exhibits 36 and 37 for identification, please.

(Thereupon said documents were marked Defendants' Exhibits Nos. 36 and 37 for identification.)

By Mr. Voland:

Q. I show you these two documents which have been marked as Defendants' Exhibits 36 and 37 for identification, and ask you whether they are copies of the notices to which you have just referred?

A. That is right.

Q. Did you direct me to send these letters on your behalf?

1146 A. I did.

Q. On or about the dates they bear?

A. I did, sir, from your office.

Q. Now, Mr. Brasile, the attempted rescission of the assignment of inventions took place on August 31, and the rescission of these other agreements took place January 8, 1954.

Can you explain to the Court what happened in connection with your connections with U. S. Carton and Mr. Lewis all during that period of time, between August 31, and January 8th?

A. Well, there was hopes between the stockholders and myself and Mr. Lewis that we would divide, we would separate ourselves from Mr. A. A. Lewis, because he didn't deliver what he promised in the first page of the trust agreements. He didn't exercise the trust agreements and the promises he made to the stockholders or myself.

Also I found that the man wasn't a man of promotion in the industry—yes, he promoted real estate in the city of Chicago, things like that, but regarding to the industry, he wasn't th right type of man to be in there. Financially, he never helped us.

1147 Q. He never did put any money into the corporation while you were there, did he?

A. No, he didn't. No, sir.

So we thought at one time that, that is we, the stockholders and myself, agreed that we will put—we will see that Mr. Lewis got out and let us start from there all over again. On or about December the 15th, something happened. What happened—the stockholders decided to

go along, and they made an agreement with Mr. A. A. Lewis, and they automatically fired me as an employee and also as a director of the company.

Q. Let me see if I can shorten this up a little bit, Mr. Brasile.

Didn't you devote the months of September, October and November in an effort to oust Mr. Lewis from the position of control which he had obtained in these corporations by reason of these voting trust agreements?

A. Yes, sir.

Q. And for a part of that time, until the end of that time, rather, you had the support of the other stockholders, or so you thought, isn't that correct?

A. That is right, sir.

1148 Q. Then what happened on or about December 1st with respect to the other stockholders?

A. Well, it seemed that they made an agreement with Mr. Lewis, and then it was decided—

Q. They notified you that they had discharged you as an officer of these corporations, did they not?

A. That is right.

Q. And they asked for your resignation as a director?

A. That is right.

Q. And you gave your resignation, did you not?

A. That is right, sir.

Q. And from that time on you have gone your way, isn't that the case?

A. That is right.

Q. So from December of 1953, you have had nothing to do with these corporations that Mr. Lewis controls, isn't that correct?

A. No, sir.

By Mr. Voland: Would you please read back the last question and answer?

(Whereupon the last question and answer were read as above recorded.)

By Mr. Voland:

Q. You mean "Yes, sir"?

1149 A. Oh, no, we didn't have anything to do with the companies.

Q. You meant to say "Yes," didn't you?

A. Yes, sir.

Q. And shortly thereafter you commenced the sale

of this accused machine by your present corporations, isn't that correct?

A. That is right, sir.

Q. As soon as you got it ready for the market, isn't that correct?

A. Right, sir.

Q. Now again going back to the summer of 1953, Mr. Brasile, let me ask you whether, if you recall, you delivered your stock in U. S. Carton to Mr. Lewis, did you?

A. That is right, sir.

Q. As voting trustee?

A. Yes, sir.

Q. And he holds that stock today, doesn't he?

A. Yes, sir.

Q. Have you ever done anything as voting trustee under that voting trust agreement?

A. No, sir.

Q. Have you ever met with Mr. Lewis or con-
1150 sulted with him in any way in connection with your duties as voting trustee under that agreement?

A. No, sir.

Q. I am referring, of course, to the period between the time the agreement was signed and the time you served notice of rescission. That covers the period from June until January.

A. Well, maybe the first two weeks after the signing, and thereafter, no.

Q. However, there was a short period of time before you became disillusioned with Mr. Lewis when you were cooperating with him, isn't that correct?

A. That is correct, sir.

Q. And it was during that period, was it, that this circular that bears the name of Paper Pack Corporation was prepared?

A. That is right, sir.

Q. Did you have anything to do with Paper Pack Corporation other than the preparation of that circular Mr. Brasile?

A. I just prepared that, helped prepare it. I didn't prepare it all.

Q. You have no stock in this corporation, have you?

A. No, sir.

1151 Q. Were you an incorporator of it?

A. No, sir.

Q. Were you or are you an officer of it?

A. No, sir.

Q. As to Pack Equipment Corporation, are you an officer of that corporation?

A. No, sir.

Q. Have you ever been an officer of that corporation?

A. No, sir.

Q. Do you own any stock in that corporation?

A. No, sir.

Q. Now referring to this assignment of inventions that you made to Pack Equipment Corporation on the 30th of June, 1953, Mr. Brasile, let me ask you, did you ever receive any royalties under that agreement?

A. No, sir.

Q. And that statement is true right up to the present time, isn't it?

A. Yes, sir.

Q. Have you ever paid any royalties to Pack Equipment Corporation or to Mr. Lewis?

A. No, sir.

Q. Has any of your present corporations ever paid any royalties to Pack Equipment Corporation?

1152 A. No, sir.

Q. Or to Mr. Lewis?

A. No, sir.

Q. Has Mr. Lewis or any of his corporations had anything to do with the production and sale of the accused machine which is here in court?

A. No, sir.

By Mr. Clement: That is all.

By the Court: Any further examination of this witness by anyone?

By Mr. McCanna: No, your Honor.

By the Court: You may step down, sir.

(Witness excused.)

1153 By Mr. McCanna: I will call Mr. Lewis.

ALBERT A. LEWIS, one of the defendants herein, called at the instance of the Plaintiff, having been first duly sworn, was examined and testified as follows:

Direct Examination by Mr. McCanna.

Q. What is your full name?
A. Albert A. Lewis.
Q. And your residence?
A. 101 Raven Oak Lane, Highland Park, Illinois.
Q. And your occupation?
A. I have sundry investments in different enterprises.
Q. I hand you a certificate number 13625 by the Secretary of State of Illinois, relating to the Articles of Incorporation of Pack Equipment Corp., incorporated June 26, 1953, and ask whether you had anything to do with that corporation.
A. Yes, I did.
Q. Please state briefly what it was.
A. I was responsible for the formation of this corporation and I am the president of the corporation pre-
1154 sently, although it is not now active.
Q. Will you—
By the Court: Speak up. I can't hear you.
By the Witness: Pardon me. I was—I am the president of this corporation. I formed the corporation.

By Mr. McCanna:

Q. Why did you form this corporation?
A. At the time this corporation was—
By the Court: Did you intend to call this witness under the statute? It is immaterial to me, but if you do intend to do so, I wish you would announce it.
By Mr. McCanna: He is a defendant.
By the Court: Well, are you calling him under the statute?
By Mr. McCanna: May I consult with my associate?
By the Court: I think we will recess at this time, gentlemen, until—this is Friday, isn't it?
By Mr. McCanna: This is Friday.
1155 By the Court: (Continuing.) —until Tuesday morning. You gentlemen may come in, I think, at 10:15. I have one motion, one contested matter and I think that will take me a few minutes. You may come in at 10:20 Monday morning.

(To the witness): I will have to ask you to come back, sir, at that time.

By Mr. McCanna: Is that Tuesday morning?

By the Court: Tuesday morning. Did I say Monday? Tuesday morning.

By Mr. McCanna: Yes, sir.

By the Marshal: This Honorable Court now stands adjourned until 10:00 o'clock Tuesday morning.

(Thereupon at 4:30 o'clock p. m., on Friday, May 27, 1955, an adjournment was taken in the above-entitled cause until Tuesday, May 31, 1955, at the hour of 10:20 o'clock a. m.)

1156

Chicago, Illinois,
Tuesday, May 31, 1955,
10:15 o'clock a. m.

Court convened pursuant to adjournment.

Present:

Mr. McCanna,
Mr. McKnight,
Mr. Pillote,
Mr. Allen,
Mr. Clement,
Mr. Voland,
Mr. Houghteling,
Mr. Bernat,
Mr. Kipnis,
And other Counsel.

1157 And thereupon the following further proceedings were had herein:

By the Clerk: Case on trial.

By the Court: Are all counsel here? Do you want to go to work?

By Mr. Clement: Yes, sir.

By Mr. McCanna: We are waiting for one of the counsel who was to bring back some exhibits.

By Mr. Clement: Do you expect to use them right away?

By Mr. McCanna: We were going to use them this morning, yes, sir.

By Mr. Clement: He will be here in a minute.

By the Court: Proceed.

By Mr. McCanna: Good morning. Will you please take the stand, Mr. Lewis?

ALBERT A. LEWIS, called as a witness on behalf of the Plaintiff under Rule 43(b), as an adverse party, having been previously sworn and examined, resumed the stand and testified further as follows:

1158 *Direct Examination (Continued).*

By Mr. McCanna: Your Honor, at the recess Friday, you asked whether I am calling this witness under the statute and we are calling him under Rule 43(b) as an adverse party.

By the Court: Very well.

By Mr. McCanna: And the same applied to Mr. Brasile.

When we recessed, we left with counsel our copies of Plaintiff's Exhibits 93, 94 and 95, to check against the originals.

By Mr. Voland: Yes. That hasn't been completed yet, but will be very shortly.

By Mr. McCanna: Well, counsel has very kindly let me use the original voting trust agreements and we will substitute these others as exhibits.

By Mr. McCanna:

Q. Mr. Brasile—

A. Lewis.

Q. Or, Mr. Lewis. I beg your pardon.

A. All right. Thank you.

1159 Q. When we were examining you Friday, the last answer was, I believe, that you formed the corporation Pack Equipment Corp. and I asked you why did you form that corporation. Will you please tell us?

A. Yes. It was in anticipation of proceeding with my duties as a voting trustee by reason of agreement made with the board of directors of the U. S. Carton Forming Corporation, the Pack Equipment Corporation was to become the general national sales agent and the distributor of such machines as we were then and expected to get from the Mojonnier-Dawson Company.

Q. This was contemplated then notwithstanding the fact that there was a contract with the Mojonnier-Dawson Company to furnish machines exclusively to Preformed

Carton and there was an operating arrangement under which those machines were being sold and distributed to Preformed?

A. The machines that were being sold at that time were the Mojonnier-Dawson machines that were being sold by U. S. Filler and U. S. Carton Forming Corporation, with the understanding with Mojonnier-Dawson Company,
1160 and this company would merely take the machines as a distributor for and on behalf of U. S. Carton Forming Corporation or U. S. Filler Company, such machines as they obtained from Mojonnier-Dawson Company, like any other jobber, except it was anticipated it would become a national jobber, to try out a plan for leasing the machines.

1161 Q. I hand you a certificate No. 13625 by the Secretary of State of Illinois, this being a certified copy of Articles of Incorporation of Pack Equipment Corp. and ask whether that is the company you formed.

A. This is another company, Pack Equipment. This is the company, Pack Equipment Corporation, that is correct.

Q. And that was incorporated June 26, 1953?

A. Based upon consultation of some one or two weeks before, it was formed on that date. Obviously it was sent in, the paper, before that date.

Q. Yes.

A. That's right.

Q. Did Mr. Brasile enter into that consultation?

A. Oh, yes. Oh, yes, and the rest of the Board of Directors of U. S. Carton Forming Corporation.

Q. They all sort of collaborated on this?

A. Oh, yes.

Q. Was Mr. Brasile a stockholder in Pack Equipment Corp.?

A. No, never was. In Pack Equipment Corp.?

Q. Yes.

A. Yes, on that date he was to become—he was to
1162 become a stockholder in Pack Equipment Corporation, that is correct.

By Mr. McCanna: I offer this certificate in evidence as Plaintiff's Exhibit 106.

By the Court: Any objection?

By Mr. Kipnis: No objection.

By the Court: It may be received.

(Said document, so offered and received in evidence, was marked PLAINTIFF'S EXHIBIT NO. 106.)

By Mr. McCanna:

Q. I hand you a certificate, No. 13626 by the Secretary of State of Illinois, being a certified copy of the Articles of Incorporation of Paper Pack Corp. and ask whether you had anything to do with that.

A. Yes. I caused this corporation to be formed.

Q. And that was incorporated also on June 26, 1953?

A. That is correct, sir.

Q. Why was this corporation formed?

A. This corporation, pursuant to understanding had with the Board of Directors of U. S. Carton Forming Corporation, was to become the national distributor for cartons manufactured by U. S. Carton Forming Corporation.

1163 Q. That was formed only for the distribution of cartons, paper cartons?

A. It became the national distributor for the distribution of cartons manufactured by U. S. Carton Forming Corporation.

Q. Was Mr. Brasile a stockholder in this company?

A. No.

Q. This was just your own company, is that it?

A. This was the corporation pursuant to the trust agreement dated June 24, 1953 that I was to organize, and at some time during the operation of the voting trust, at my discretion, to exchange the stock that was deposited under the voting trust agreement of June 24 for stock in this corporation.

By Mr. McCanna: I offer this certificate in evidence as Plaintiff's Exhibit 107.

By Mr. Clement: No objection.

By the Court: It may be received.

(Said document, so offered and received in evidence, was marked PLAINTIFF'S EXHIBIT NO. 107.)

By Mr. McCanna:

Q. Are you acquainted with Maurice J. Brasile?

A. Yes, I am.

1164 Q. And with the Preformed Carton Corporation?

A. Yes, I am.

Q. And U. S. Filler Equipment, Inc.?

A. Yes, I am.

Q. And with U. S. Carton Forming Corporation?

A. Yes, sir.

Q. And with Albert B. Mojonnier?

A. Yes, sir.

Q. And with the Mojonnier-Dawson Company who is the plaintiff in this case?

A. Yes, I am.

Q. Are you acquainted with the Electromatic filler made by Mojonnier-Dawson Company?

A. Yes, I am.

Q. When did you first meet Mr. Brasile in connection with the business of Preformed Carton Corporation and U. S. Filler?

A. I first met Mr. Brasile in connection with any of the three companies, Preformed Carton Corporation, U. S. Filler or U. S. Carton Forming Corporation, in the latter part of May of 1953.

Q. Did that have anything to do with the Electromatic filler business?

A. It didn't particularly have anything to do with
1165 it at the time, but in conjunction therewith the Electromatic filler was part of the discussion had then and subsequently.

Q. Would you say when you first became interested in the Brasile business dealing with the sale of Electromatic fillers?

A. When I first came in contact with Mr. Brasile, the Mojonnier-Dawson filler was being then sold by U. S. Filler Equipment Corporation and U. S. Carton Forming Corporation.

Q. And what was your interest in that?

A. Well, I was invited to come to see Mr. Brasile because of an explanation that they needed some new business development and a method of how they could obtain new capital, advise them how to obtain new capital for their business.

Q. Did you enter into that business in any way?

A. I was invited by the Board of Directors of U. S. Carton Forming Corporation to take an interest in the business.

Q. Did you investigate the business, the filler business, at that time?

A. I investigated both the carton business and the filler business at that time.

1166 Q. Did you acquire a rather full knowledge of the business Mr. Brasile was carrying on with the Electromatic fillers?

A. As much as one could in a number of meetings. I thought I acquired what was a fairly adequate knowledge.

1167 Q. Did you in this period up through the latter part of May and into June, did you observe that the sales of the Electromatic fillers were climbing right along?

A. In the course of our meetings, Mr. Brasile had explained to me that there was a great need for a filling machine, and they were having a great business success in selling them, in spite of the fact that the machine they were getting was a very bad machine and giving them a great deal of trouble. The dairies couldn't help themselves. They just had to buy something.

He also explained to me that the machine they were handling then was being manufactured by the Mojonnier-Dawson Company, and that he had been experimenting and working and trying to work with Mojonnier-Dawson to improve the machine that was giving so much trouble to the dairies that were buying the machine at that time.

Q. Now in spite of that you proposed these voting trust agreements, is that correct?

A. I didn't do it exactly that way. The way that came about was at a meeting of the board of directors of U. S. Carton Forming, they wanted to know if I would be

1168 interested in providing capital. I explained to them, after looking over the balance sheet, I discovered that the company had been losing at the rate of $10,000.00 a month, that is, U. S. Carton Forming Corporation.

When I inquired the reason therefor, they said they were having so much trouble with these machines, servicing them, that the profit being made by U. S. Carton Forming was comparatively wiped out by the loss that was occurring over and above the sales benefits they were getting.

I said under the circumstances I wouldn't invest a single penny in the company. They said what would I do, and I said I thought the business held some promise and had possibilities, and with the promise of Brasile working with Mojonnier-Dawson to improve particularly the hydraulic feature and the stapling system for sealing the cartons, and considering the volume of sales, in spite of the machine, I said I would be willing to take an interest, but not make an investment in that company.

They asked what method I would advise, and after

1169 due consideration, I said to them that I would be willing to take an interest similar to an option of

stock in the company, but not in the form of an option, to to the extent of 50 per cent in U. S. Carton Forming Corporation.

They asked how that could be done, and I suggested that a voting trust agreement be arranged. In view of the fact the stock had been depleted in value, that they deposit the stock under the voting trust agreement, and they could appoint a trustee and I would be one of them. At that time I thought I should be the sole trustee, but they insisted on another trustee. But I reserved the right in my sole capacity to exchange such stock as was deposited for the stock of the new corporation that I would form, and that corporation was intended to be Paper Pack Corporation, at some time during the period when I felt it appropriate and desirable for me to do so, and by this method I would take voting control of the stock of U. S. Forming and obtain a 50 per cent of the stock in Paper Pack Corporation, and continue on from there.

1170 Q. Was that exchange ever made with Paper Pack?

A. That exchange has not been made to this date.

Q. I hand you what appears to be an original signed copy of a voting trust agreement. I believe that is the same as the copy which we have in evidence, marked Plaintiff's Exhibit 93, being dated June 23, 1953, pertaining to shares of stock of U. S. Carton Forming Corporation, and ask whether this is the voting trust agreement to which you have been testifying? I mean the one in which you and Mr. Brasile are the voting trustees.

A. This is a copy of the voting trust agreement in which Mr. Brasile and I are voting trustees and in which I reserve certain privileges individually as trustee.

Q. Is this your signature to the agreement as trustee?

A. That is correct.

Q. Do you recognize Mr. Brasile's signature on that?

A. Yes, I do.

Q. Now on July 10, 1953, did you enter into two trust agreements in which you became the sole trustee of the voting stock of Preformed Carton Corporation and U. S. Filler, Inc.?

1171 A. Yes, I did.

Q. I hand you what appears to be original signed copies of these voting trust agreements, and we have had

in this case copies marked Plaintiff's Exhibits 94 and 95, and I will ask you whether you can identify these.

A. Yes. This is the voting trust agreement pertaining to the shares of stock of Preformed Carton Corporation, now marked No. 94.

Q. Plaintiff's Exhibit 94?

A. Yes. Here's a voting trust—this appears to be a copy of the voting trust agreement pertaining to shares of stock of U. S. Filler Equipment, Inc., marked No. 95.

Q. Is that your signature as trustee on each of these agreements?

A. Yes, it is. Yes, sir.

By Mr. McCanna: I again offer these three voting trust agreements in evidence as Plaintiff's Exhibits Nos. 93, 94 and 95.

By Mr. Kipnis: They are already in, your Honor.

By Mr. McCanna: There was some reservation about them, and I just wanted to make certain that we
1172 didn't overlook anything.

By the Court: They may be received.

You need put only one paper in the record, however.

By Mr. McCanna: Yes, that is what we will do.

(Said documents, so offered and received in evidence, were marked PLAINTIFF'S EXHIBITS NOS. 93, 94 and 95, respectively.)

By Mr. McCanna:

Q. Now, Mr. Lewis, by these voting trust agreements with Preformed and U. S. Filler, did you acquire the control of the operation of these companies?

A. Well, only to the extent that the trust agreements so recite. I mean, merely becoming a trustee doesn't give you any more rights than a trust agreement, so they speak for themselves.

Q. You mean you acquired the rights as shown in these trust agreements?

A. That is right.

Q. I hand you a brochure printed in red and blue, giving this red, white and blue effect, entitled "Milk Package History in the Making for the Smaller Dairy,"
1173 and ask whether you can identify that.

A. This type of circular was exhibited to me by Mr. Brasile before my entering into any relationship with any of these companies.

Q. I notice on the back of this circular the name "U. S.

Carton Forming Corporation, Woodstock, Illinois." What you have just said about Mr. Brasile representing this to you, it was in connection with U. S. Carton?

A. He showed me this circular at the time that he was telling me about the business of U. S. Carton Forming, and explained that this was the machine manufactured by Mojonnier-Dawson which, pursuant to the contract that was had with Mojonnier-Dawson, they were distributing the machine, and this described the function of the Mojonnier-Dawson machine, and they were selling it pursuant to the contract which they had with Mojonnier-Dawson Company.

By Mr. McCanna: I offer this brochure in evidence as Plaintiff's Exhibit No. 108.

By Mr. Clement: No objection.

By the Court: It may be received.

1174 (Thereupon said document, so offered and received in evidence was marked PLAINTIFF'S EXHIBIT NO. 108.)

1175 By Mr. McCanna:

Q. Now, Mr. Lewis, you are familiar with the contents, I assume, of this brochure, Plaintiff's Exhibit 108?

A. Only such as you would casually do, in getting acquainted, with reading, just casually examining it when a circular is handed to you, such as was handed to Mr. Brasile at that time.

Q. You knew this was the Electromatic machine?

A. Oh, yes. He explained it, yes, he did.

Q. Now, referring to May and June of 1953, did you have any knowledge of a machine which we have here in the court room marked Defendants' Exhibit 33, this machine sitting over here (indicating)?

A. Yes. I saw that at the office of U. S. Filler Equipment, Inc., in Woodstock, Illinois.

Q. Do you recall when you first saw it there?

A. Well, the first time I came in to visit with Mr. Brasile.

Q. And did Mr. Brasile at that time tell you anything about this machine?

A. Yes. He told me about this machine and also about the machine that they were handling, manufactured 1176 by Mojonnier-Dawson Company.

Q. What did he tell you about this machine, Defendants' Exhibit 33?

A. He said he was experimenting with that machine: that it had a cam action, as you will notice by the cam, below there (indicating), but then, because of the cam action, it was a different kind of machine than the Mojonnier-Dawson were manufacturing.

He also told me the reason he was doing so he wanted the Mojonnier-Dawson Company to make a better machine than they were then making at that time.

Q. He told you quite a bit about the machine, is that correct?

A. As much as you could explain about the machine. He explained this machine could automatically carry the cartons through and that the cam action would activate the mechanism that would fill the carton and subsequently carry it on through and seal it and staple it.

Q. Do you recall in the taking of your deposition in this case that you said you saw this machine for the first time sitting in the office over at one side, covered with
1177 dust and that's all there was to it?

A. That is exactly the way it was. But, he explained it to me, exactly. It was standing over in the corner covered with dust. It wasn't visible. It wasn't in action. He didn't show it in action. It was merely explained to me. It was merely standing in the corner, covered with dust, exactly so.

Q. Did he tell you what he was going to do with this machine?

A. Well, he told me he was experimenting with this machine.

Again, in the course of the conversation, he said that the dairy industries were very much in need of a machine by reason of their not being able to bottle the milk in paper cartons, and particularly Pure-Pak cartons, particularly preformed Pure-Pak cartons, and while they were selling the machine, it was merely an absolute necessity for the dairies doing something that they bought the Mojonnier-Dawson, that they were having so much trouble with leakers and with bad operation and broken parts and defective parts, that they had to do something to improve on the machine Mojonnier-Dawson was making.

1178 Q. This machine was the one he was going to—

A. He explained to me this machine he was experimenting with to eventually hand over to the Mojonnier-Dawson Company, so he thought, and he also was experimenting with a hydraulic unit.

The Mojonnier-Dawson machine, you see there (indicating) is operated by a foot pedal.

Q. This one (indicating)?

A. Not this one (indicating). The next one over. I never saw this type (indicating). I saw that type (indicating).

Q. The one marked Plaintiff's Exhibit 39?

A. It wasn't quite as elaborate as it appears to be now, the earlier machine, but he showed me a foot pedal and said that a man would get limp standing and operating it and it was almost impossible and he was working on a unit to make an automatic hydraulic unit.

He said the stapling unit worked badly, they leaked very badly; as the result of it, the cartons leaked and the customers complained and he was trying very much to improve on that machine and he explained to me he was trying to work, in conjunction with the Mojonnier-Dawson Company, for that purpose.

1179 Q. What did he tell you about the filler?

A. Well, I was not as much familiar with the filler. It filled, and he said that the Mojonnier-Dawson Company owned the timing device.

Well, he explained to me the timing device was a device like a radio; it worked like many timing devices, but they were making it, or buying it manufactured, and that is the way the machine operated. I didn't look into more detail on that.

It was sufficient to get the broad viewpoint on that thing.

Q. And this was Mr. Brasile's idea also, with reference to this machine, Defendants' Exhibit 33?

A. No. He said that that machine that he was experimenting on, that that machine had a different idea in mind.

Q. You are now talking about Defendants' Exhibit 33?

A. That is right, that old machine there (indicating). He said they had a different idea so far as moving the carton along and so far as being activated by a cam process.

Q. I am talking about the filler part of that machine, the parts that fills.

A. I didn't say anything about filling. With that 1180 machine he didn't go into much detail about the filling, with that particular machine. I think, as I recall now, he said when filled, it would be activated by a cam, which is shown underneath that table.

He did point that out to me.

Q. Do you recognize this picture, marked Exhibit 71, as the machine you are now talking about which you saw at U. S. Filler?

You can go over and compare it, if you wish.

A. I can't understand it. There is something on the front here with an electric unit on it that I don't see on that machine there now (indicating). Maybe it is on the reverse side, but it looks to me like a similar machine, that old machine there (indicating). There is some part of it I don't see on their now, but other than hat, it looks like the same machine.

Q. You mean the motor mechanism that is driving, down on the corner that is seen on the photograph?

A. Yes. I don't see it on here now. I don't recall whether it was on there or not.

Q. You do recognize the machine?

A. It appears to be a similar machine. It appears
1181 to be the similar machine.

Q. Did you ever see more than one machine of that type?

A. Only that one. It was standing in the corner. I didn't get too good a look at it. It was off to one side.

1182 Q. Do you know what became of this machine, Defendants' Exhibit 33? Do you know what Mr. Brasile was doing with that?

A. Well, he was experimenting with it and as I understand it, at a subsequent date, I was informed that he, on his own accounting, or whether the servicing was done by one of the other companies or not, he did send it down so that the Ex-Cell-O Corporation should look it over and advise him what he might do to further improve it or advise him whether it was any good at all.

Q. Now at that time, you had these voting trust agreements and I assume that you were quite interested in what Mr. Brasile was doing, is that correct?

A. Well, first of all, I did not see fit to make any changes, notwithstanding the fact that I was in a fairly good position as a voting trustee in any of the organization's structures of the business. I was new to the field. I knew nothing about it. I had a lot to learn and so, the main thing that I saw from the previous operations, the balance sheet and the explanation of the operation, that they had a very bad business plan and they had to do something to create a better product for the market.

1183 Q. Now, Mr. Lewis, I am asking you about the Brasile contacts with Ex-Cell-O and the sending of this machine up to Ex-Cell-O.

A. All I can tell you about that is I know he explained to me during one of the meetings we had that he had sent the machine on to Ex-Cell-O merely for their examining the machine, to get their viewpoint on the machine, what it would do; whether it had any promise as a machine, as such. That is about as much as I know about it and that is actually so.

Q. Did he tell you what the outcome was of sending the machine to Ex-Cell-O?

A. Yes. Subsequently I learned that Ex-Cell-O sent the machine back and found it faulty and unsatisfactory.

Q. I hand you a photostatic copy of a paper entitled "Assignment of Invention," marked Plaintiff's Exhibit 105, and ask whether you can identify that.

A. Yes. This is a copy of an assignment of invention that Mr. Brasile made to Pack Equipment Corp. It
1184 isn't a full copy because it isn't notarized. A true copy was notarized by the bank at Woodstock, Illinois.

Q. Did you take any part in the making of this assignment?

A. Yes, I did.

Q. Will you please tell us what part you took and what you did?

A. Well, you see, the only way that I could acquire 50 per cent in the operation of the business and really not invest any money that I would not control, that is, control any such money that I would invest, was by this method of developing a voting trust agreement as to the shares of U. S. Carton Forming Corporation and as to the shares of these other corporations, U. S. Filler Equipment and Preformed.

Then, if I did put any money in, I would put it in the Paper Pack Corporation and I would control the expenditures, know how it was spent and have a proper business use of it.

And so, in connection with that there was some talk about Mr. Brasile had experimented with this 33 old machine and he claimed that he might have some features
1185 there which might be possibly subject to getting a patent out and so we wanted to be sure and so did the rest of the board of directors want to be sure, so if

there was such a thing in the future, either one or ten years later, we would own such efforts on the part of Mr. Brasile while he was president of U. S. Carton Forming Corporation, and so we took this assignment for whatever it meant at the time and I didn't know too much about machines but he says he had this kind of an idea and that kind of an idea and we thought we better get it incorporated into this and the idea was that he was to get 50 per cent of the stock of the Pack Equipment Corporation which I formed and organized and they would want that and it would be subsequently turned over for the benefit of the rest of the stockholders of U. S. Carton Forming Corporation.

The reason for that is the only investors in U. S. Carton Forming Corporation were other than Mr. Brasile and Mr. Blum. They did not invest a single penny, so far as I know. In fact, the other small stockholders put in over $85,000.00 and those were the people that invited me
1186 into this picture and they were the ones that demanded if there was anything to come out of this machine five years or ten years in the future, it should properly belong to U. S. Carton Forming Corporation, and we all agreed to that.

1187 Q. And this assignment was made by Maurice J. Brasile for an invention that he had made and ideas he had made?

A. I did not say that. He claimed that some day he might have something that might be patentable. There wasn't any patents in existence or no advance action developed. It was what you see there (indicating).

Q. In this machine marked Defendants' Exhibit 33?

A. Yes, or anything else that he might have come up that we did not know anything about. It was sort of a catch-all; if Mr. Brasile who had been working and being paid $250 a week by U. S. Carton Forming Corporation, had developed anything during that period of time that might some day be valuable to the company, we wanted to have it for the benefit of the company, U. S. Carton Forming Corporation.

Q. Now this assignment says that Maurice J. Brasile: "Does hereby sell and assign to the Pack Equipment Corporation the inventions in a semi-automatic and automatic filler for containers."

What was your understanding as to that filler?

A. That right there (indicating).

1188 Q. Defendants' Exhibit 33?

A. That machine right there (indicating), that is right. I was unfamiliar with the phraseology so thoroughly as I am now with fillers, and that was what was the explanation, there.

Q. And this assignment was prepared by your attorney?

A. That is correct. Oh, and Mr. Henahan who was Mr. Brasile's attorney had looked it over, approved it.

Q. I believe you said that you have the original assignment which has been notarized, is that correct?

A. Yes, we have it.

Q. Now, about the consideration that is mentioned in this assignment, it says that the consideration includes the issuance of stock in the Pack Equipment Corporation, receipt of which is acknowledged.

A. That is right.

Q. That is the stock you have told about?

A. The stock was issued, that is correct.

Q. In what amount was that?

A. 50 per cent common stock. I believe, as I recall now, it was 100 shares, I believe, of no par stock

1189 and 50 per cent went to Maurice J. Brasile and also being held for the purpose of his assigning the same for the purposes of U. S. Carton Forming Corporation, of which he was one.

Q. I believe the sum of $25,000 has been mentioned as a value. What sort of value was there in amount of that stock?

A. The amount that was issued was $5,000 and I believe $10,000, five or ten thousand dollars in either one of the corporations and $10,000 in the Paper Pack Corporation but there wasn't any set figure or any agreed upon amount. In fact, I specifically and definitely told Mr. Brasile and the rest of the Board of Directors that I would not invest a red cent in their companies except if I put it into such companies that I could control or where I could have the voice of spending my own money in connection with the promotion or development of that business from that point on.

Q. Now as to the Pack Equipment Corporation, which received the assignment of this Brasile invention, isn't it a fact that you and Mr. Brasile were 50-50 stockholders in that?

1190 A. I just got through explaining to you that 50

per cent of the stock was issued to Mr. Brasile and with the consent of the rest of the Board of Directors of U. S. Carton Forming Corporation that 50 per cent was to be assigned to the U. S. Carton Forming Corporation for the benefit of its stockholders because anything he did with that machine, he did while he was employed for U. S. Carton Forming Corporation.

1191 Q. I hand you a photograph marked Plaintiff's Exhibit 85 and ask whether you saw that in your dealings with Mr. Brasile?

A. Yes, I did, subsequently.

Q. Can you tell us about that, please?

A. The companies here had sold some 300 machines, I believe, for the Mojonnier-Dawson Company and it was explained to me that before these companies started to sell these machines for Preformed Pure-Pak cartons, that no machine had been sold by anybody for Preformed Pure-Pak before and that when Mojonnier-Dawson contract, which he made with me and on behalf and with these companies was breached by the Mojonnier-Dawson Company at a subsequent period, Mr. Brasile thought he would do something about furthering the development of a machine. This was the result of an artist's drawing, putting an apron around that particular machine.

Q. You mean the machine, Defendants' Exhibit 33?

A. That is right.

Q. And did Mr. Brasile tell you what he intended to do with this proposed machine that is shown in Plaintiff's Exhibit 85?

A. Long after the breach of the contract with

1192 Mr. Mojonnier-Dawson, or the Mojonnier-Dawson Company, in which they did not sell us any more machines, Mr. Brasile suggested that he might go about the business of turning that into a filler machine and then he took in an artist and he had an artist draw an apron around the machine and that was supposed to be a machine he would then try to manufacture for the purpose of having a machine to sell in conjunction with the business of U. S. Carton Forming Corporation.

Q. You said "long after,"—

A. Oh.

Q. Do you recall when the Mojonnier-Dawson Company notified Preformed that they were terminating the contract of December, 1951?

A. I believe it was in about —it was about the latter part of June.

Q. So that you saw this photograph, Plaintiff's Exhibit 85, in the latter part of June, 1953?

A. No, I don't think so. I saw it later than that. If I did see it before, I don't recall. It seems to me I must have seen it as much as thirty days subsequently, at least. I am not quite sure about that.

1193 Q. I hand you a brochure in yellow and black, marked Plaintiff's Exhibit 103, and ask whether you can identify that.

A. Well, this seems to be—this is a copy of the photograph which you just showed me.

Q. Plaintiff's Exhibit 85?

A. That is correct.

Q. You mean—

A. I mean the picture on Exhibit 85 is the same as on this particular circular, almost the same. I see there are some words on here that are not on there (indicating). There are some words on the circular that are not on the first picture you showed me.

Q. Now who published this circular marked Plaintiff's Exhibit 103?

A. Well, it was published with the name of Paper Pack Corporation but the material for the circular was given to me by Mr. Brasile. He was acquainted with it and I wasn't, and this was published, either in September or October of 1953 in a very light quantity.

Q. And that was published by Paper Pack Corporation?

1194 A. They put their name on it, yes. It was issued and distributed, to some extent, by Paper Pack Corporation, that is correct.

Q. And that is your corporation?

A. That is my corporation, yes, sir.

Q. Now, you say it was distributed. To what trade was this circular distributed?

A. Well, we were trying to develop a business plan and, in a small way similar to the big plant the Ex-Cell-O Corporation was using in the milk industry. They leased their big machines to the big industries.

By Mr. Kipnis: Can you fix the date, Mr. McCanna, when that was distributed?

1195 By Mr. McCanna: Well, the witness said—

By the Witness: It was September or November, I don't remember exactly.

By Mr. McCanna:

Q. Of 1953?

A. 1953, correct. So we wanted to test out whether the small dairies couldn't have a like benefit if they had a good machine, and this machine was not in existence then, and I knew it. But if they had a good machine, would they like to have an opportunity to lease it for $50, $60, or $70 a month as compared to the $1,000 a month for the big machine manufactured by Ex-Cell-O.

This was made with the idea of testing a business plan to see whether the small dairies would like to lease such a machine if it were available.

Q. But the machine shown on the front page of this circular, Plaintiff's Exhibit 103, was essentially the Brasile machine that is over there, Defendants' Exhibit 33, isn't that correct?

A. As I explained before, that machine was not a product that I ever seen operate, and it was explained that the company from Detroit, the—

Q. Ex-Cell-O?

1196 A. Ex-Cell-O Corporation had said it wasn't very good, but Mr. Brasile persisted and thought he could do something, could bring something out of it, particularly after the breach of contract by Monjonnier-Dawson. So they dressed it up, put an artist's conception of a skirt around the old machine, and we were trying out a business plan to see whether such machines, if available, would go.

Q. Now the description on the front page of this circular, Plaintiff's Exhibit 103, will you please examine that briefly and compare it with the description on the front page of the circular put out by U. S. Carton, which we have marked Plaintiff's Exhibit 108?

A. Well, you see, this circular—

Q. Which shows the Mojonnier-Dawson machine.

A. This was shown me sometime during the early discussion with Mr. Brasile.

By Mr. McCanna: Let the record show the witness is holding up Plaintiff's Exhibit 108.

By the Witness: Yes, and the authorship of this material was not Mr. Brasile. He explained to me that that was the advertising man. When Mr. Brasile sought

1197 to get this copy for me, I suppose he used the same

material, without any particular meaning of tying the two together, except it was the authorship of an advertising man, and he, not being familiar with advertising material, and I not being familiar with machines, I suppose it was incorporated there, and that is what it appears to me like at this time.

By Mr. McCanna:

Q. In other words, you did put out circulars to the trade in which the same language you used to describe the Mojonnier-Dawson machine is used in offering this machine shown in Exhibit 103?

A. Well, the language written here doesn't particularly have any reference that you were talking about Mojonnier-Dawson. It could be described about any filler machine as far as I can see. I mean, there wasn't any particular significance to it.

1198 Q. Oh, you think when a dairyman received this circular, Plaintiff's Exhibit 108, that he wouldn't connect that with the machine shown in there?

A. No. No, this exhibit—no, this exhibit particularly shows the Mojonnier-Dawson machine, the picture of the Mojonnier-Dawson machine.

Q. What about this one?

A. That does not do that. It merely describes a machine that an artist took and touched up for that old product over there, and there was no machine like this in existence, none.

Q. What about the dairy owner when he received this circular, what could he do?

A. What he could do, he could get an idea. He could take a look at the machine somebody got up in their mind that they could possibly produce, and see whether or not that kind of machine would appeal to him, as you many times do in a promotional campaign, to find out what the market will take and what it won't take.

Q. Now on the inside of this circular, Plaintiff's Exhibit 103, I note on the first page in large letters "Exclusive features, Automatic machine," and under that 1199 is listed a number of features.

The first one says "Foamless filling." What did that have reference to?

A. Well, I suppose it is a descriptive way of describing the machine. What Mr. Brasile intended at that time was to say that if this machine were made, that it would be

made so that it would have a minimum amount of foam while filling, which was not true of the Mojonnier-Dawson machine.

Q. That was not true of the Mojonnier-Dawson machine?

A. No, definitely not. It was very badly arranged. Foam would come all over the floor and all over the machine. It is a wonder the health inspectors ever let it go through.

Q. Now what about this second feature, "Positive control"? What did that have reference to?

A. Positive control, I suppose he had in mind that by cam action of that machine, that the cam would come up to a certain height and lift a rod that would open up the valve, and therefore when the cam came down again it would be a positive filling device. That is what I suppose he had in mind, as I read it now, in the light of my
1200 later experience, I can see that. At the time this was published, believe me, I had very little knowledge about it.

Q. But didn't you know that one of the features of the Mojonnier-Electromatic machine was positive volume control?

A. On the contrary, they told me very definitely that it was a very bad filler from the standpoint of volume control by this reason: That if the electricity fluctuated in some small town, as it does, it might fill several ounces more or several ounces less, or if the filler wasn't set properly, the carton went out unmeasured and not in accordance with the standards set by the United States Standards, and they were having a great deal of trouble with that.

Q. And that would be corrected in this machine, Defendants' Exhibit 33?

A. That was the idea. He had an idea to do so. He had not then completed or done it, but that was the idea he would like to do.

1201 Q. Down here under these exclusive features, on the second page of Plaintiff's Exhibit 103, I note the words "Rapid change-over half pints to half gallons."

Did that have reference to the machine shown on the front page of the circular?

A. Yes. I suppose he had in mind if that machine were developed, he could have a rapid change-over. All machines apparently try to do that, change over from half gallons to quarts to pints and to half pints. There is nothing special about that.

There is nothing special about any of these features that I see, in particular, except that some of these things were not so in so far as the Mojonnier-Dawson machines were concerned. In other words, he tried to show that if a better machine were produced, this is the idea that they would try to incorporate in such a machine.

Q. I hand you a paper entitled "Pack Equipment Corporation Filling Machine Lease," and ask whether you can identify that?

A. Yes, sir, I caused this to be printed. It was somewhat of a copy of the Ex-Cell-O Corporation lease for the big machine. I explained to you before we were going
1202 to try to find out whether a smaller business plan on a pattern like the Ex-Cell-O pattern would work with the small dairies.

Q. Now I believe you testified a few minutes ago that Paper Pack Corporation was going to handle the sale of these proposed machines or the distribution of them. Here we have a filling machine lease under the name or sent out, was it, by Pack Equipment Corporation?

A. Yes. You see, if this machine were to be sometime in the future manufactured, which we thought we might do, then we wanted to find out whether or not the dairies would be willing to lease them for a nominal consideration. In that event it would require financing, and I had contacts for that purpose.

This lease was devised from a copy of Ex-Cell-O Corporation's lease to suit the pattern of financing companies and banks so that if it was workable we would use this form through Pack Equipment Corporation as such. It would become the leasing agent of such a machine.

As a matter of fact, we contemplated doing that with the Mojonnier-Dawson machine originally, leasing the Mojonnier-Dawson machine, if, as and when it was im-
1203 proved or when it was received.

By Mr. McCanna: Will the reporter please mark this as Plaintiff's Exhibit 109 for identification?

(Thereupon said document was marked Plaintiff's Exhibit No. 109 for identification.)

By Mr. McCanna: I offer this in evidence as Plaintiff's Exhibit 109.

By Mr. Kipnis: No objection

By the Court: It may be received.

(Said document, so offered and received in evidence, was marked PLAINTIFF'S EXHIBIT NO. 109.)

By Mr. Kipnis: Will you fix the date when that was sent out?

By Mr. McCanna: That was my next question.

By Mr. McCanna:

Q. Was this filling machine lease, Plaintiff's Exhibit 109, sent out with the circular, Plaintiff's Exhibit 103?

A. It may have been sent before because this lease was contemplated to be used, first, in connection with the Mojonnier-Dawson machine, and then we may have sent
1204 it out with this circular subsequently. The only time—

1205 Q. Well, referring to Plaintiff's Exhibit 109, the machine lease paper, Paragraph 1 says:

"Lessor leases to lessee one Pack Equipment semi-automatic filling machine."

A. Yes.

Q. Now what filling machine did that have reference to?

A. Well, that apparently had reference to any machine that would be termed Pack Equipment machine owned by or purchased by Pack Equipment. If we had not had a cancellation or breach of contract by Mojonnier-Dawson Company, it could just as well have been a machine that we bought pursuant to our original contract with Mojonnier-Dawson as well as this machine if, as and when manufactured.

Q. So then this filling machine lease, Plaintiff's Exhibit 109, was prepared prior to July 7, 1953?

A. No. No, subsequently, I believe—or I don't know the exact date. Really, I will have to check the record. If you want me to give you the exact date, I shall be glad to give it to you.

Q. What is your best recollection of when you put
1206 out this filling machine lease, Plaintiff's Exhibit 109?

A. Well, we intended to have, the lease was designed and written originally for the Mojonnier-Dawson machine, and I think, as I recall now, that this was a subsequent redesign of the machine, after Mojonnier-Dawson refused to give us the machines pursuant to our contract.

There was another typewritten copy made up particularly for the Mojonnier-Dawson machine. I remember that distinctly now.

Q. I hand you a carbon of a letter dated July 7, 1953, from the Mojonnier-Dawson Company to Preformed Carton

Corporation, marked Plaintiff's Exhibit 61, and ask whether you had any knowledge of that letter being received by Preformed?

A. Well, I don't know the exact content of the letter, but if this is an exact copy of the one that was sent, I do know something about it.

Q. What do you know about its receipt?

A. That it was received, as far as I know. I am not sure, but I assume it was received.

Q. And at that time you were under at least one of these voting trust agreements?

A. What date is that letter?

1207 Q. July 7.

A. Well, at that time only the trust agreement pertaining to the shares of U. S. Carton Forming Corporation was in existence. It was on, well, on July 10, I believe, that the other two voting trusts were established.

Q. So that at the time the two voting trusts were established, July 10, 1953, that is, Plaintiff's Exhibit 94 with Preformed Carton, and Plaintiff's Exhibit 95 with U. S. Filler, you were aware of this letter, Plaintiff's Exhibit 61?

A. I might add that those trust agreements were not just prepared the morning they were signed. We had talked it all over, agreed on all the substance. The agreement was made long before July 10—actually prior to June 24. It was merely authenticated on that date because that is the first time we had a chance to get together to sign them up.

Q. Then the effect of this letter, Plaintiff's Exhibit 61, was the cessation of supply by Mojonnier-Dawson Company of these Electromatic fillers to Preformed?

A. I understand that he stopped sending machines 1208 before that date.

Q. And you knew about that?

A. Sure. I visited Mojonnier-Dawson, in which I got an agreement from him in which he agreed to send machines. That was the purpose of my visit and the purpose of the agreement dated April 24, but intended to be June 24. It is in the record here.

You see, they had stopped sending machines, and the purpose of my visit was as trustee for the stock of U. S. Carton Forming Corporation, it was my duty to get the business back in good shape, get going, get moving, and get some business done, and I went to see Mr. Mojonnier of Mojon-

nier-Dawson Company, and there and then we made an agreement. We agreed and passed our words and shook hands that he would continue to send machines.

If he had been sending machines before, we wouldn't have had any reason to make an agreement to continue to send the same, and he subsequently wrote a letter to authenticate the agreement that was made, in writing, above his signature.

1209 Q. Is that an agreement in writing you are talking about?

A. Well, he made an agreement with me verbally. It was a verbal understanding. It was pursuant to the meeting we had the day before at luncheon, and we had an understanding. He merely wrote the letter to verify the agreement that was had before.

Q. Wasn't that letter to be accepted in writing, if there was an agreement?

A. An agreement was had and obtained, and we shook hands on it and passed our word, and everything was in fine shape and the letter was merely to, again, repeat what had been done before, the agreement that had been had.

Q. That is your understanding of it?

A. That exactly was it. That was it. I am accustomed to making agreements like that, by passing of my word, and I have lived up to many agreements in my lifetime just on the passing of my word, like I would with a stockbroker.

Q. Mr. Lewis, after these voting trust agreements were entered into, did you take any active part with Mr. Brasile toward completing this machine or bringing it out, the manufacturing of it?

1210 I am referring to this machine, Defendants' Exhibit 33.

A. I did not become an officer of U. S. Carton Forming Corporation until after the other directors, three other directors, Mr. DeTolve, Mr. Moore and Mr. Patton, dismissed Mr. Brasile and Mr. Blum on December 1st, 1953.

At that time they asked me would I become the president of U. S. Carton Forming Corporation, which I agreed to undertake to do and to manage the business at that time.

When I walked into that business, December 1st, 1953, there wasn't any money for payroll, and people were standing in line for their pay. The first thing I did was take out some of my money and contribute it to that company for that purpose.

Prior to that time there was no machine manufactured that I know of. The only machine we talked about was the possibility of what might be done with this machine. That was only in my capacity as voting trustee.

Q. That is Exhibit 33?

A. That is right, after the breach of contract by Mojonnier-Dawson Company—not before.

1211 Q. I am talking about this period between the date of December, 1953 that you just mentioned and the termination of relations with Mojonnier-Dawson Company, in that period.

A. What period are you talking about, sir?

Q. Well, you just mentioned this December, 1953 date.

A. Yes, sir.

Q. And now prior to that, going back to the time—

A. Of the breach?

Q. (Continuing.) —that the Mojonnier-Dawson breach occurred.

A. There was no machine manufactured at all. Mr. Brasile was trying and with great effort to improve upon the foot pedaling device, the hydraulic unit and the stapling unit for the Mojonnier-Dawson machine. He had gone only so far as you see on that machine there, no further, except for the artist's drawing which he showed me, and there was no other machine made.

Q. Now I am asking you, Mr. Lewis, whether you were active with Mr. Brasile in that period, the latter part of 1953, in preparing this machine, Defendants' Exhibit

1212 33, and the one that is shown in this artist's drawing —whether you were active in preparing that for the market, to manufacture.

A. Well, now, when you say active with that machine, I just got through saying, and I will answer it fully in this respect, that that machine was no further improved then than it is now. That is when I first saw the machine.

No action was taken to improve that machine mechanically or put a single nut, screw or bolt on it. The only thing that he did, he was experimenting, making a hydraulic unit for the Mojonnier-Dawson machine, and a stapling unit, in order to serve those customers who had bought those machines and they were so badly in need of improvement. That is the only thing he did.

I was not active with Mr. Brasile. On one occasion I went with him and visited Pabich, and I visited only merely

because he wanted to display me as the man that would possibly come behind him with money in the future, I suppose. That is the reason he took me over, I suppose. I visited once or twice with Pabich, and other than that I had nothing to do with it.

Q. Weren't you familiar with the—

1213 A. Oh, yes, I want to correct that. I did subsequently go to a company called Barnes & Company, and also asked them if they could come up with something that could cure the terrible condition the dairies were suffering with that foot pedal machine, whether they couldn't make a hydraulic unit for the Mojonnier-Dawson machine or make some improvement.

I did do that. That is as far as I went. No model was ever made and no model was ever sold.

1214 Q. I would like to go back to the beginning of this period, that is, the fall of 1953, and ask you—

By the Court: How much longer will your examination take?

By Mr. McCanna: Oh, I believe about twenty minutes or a half hour.

By the Court: We will take a short recess.

(Whereupon a short recess was taken.)

By the Court: Proceed.

By Mr. McCanna:

Q. Mr. Lewis, you have testified as to your knowledge of a Brasile filling machine, this Defendants' Exhibit 33, being sent up to the Ex-Cell-O Corporation for testing.

Now did you know of any other filling machine sent by Mr. Brasile to Ex-Cell-O?

A. To the best of my knowledge I don't know of no other machine. There was none. That is the only machine, that old model there, that was sent up, and Mr. Brasile told me about that. Then it was sent back to Woodstock,

1215 found undesirable by Ex-Cell-O Corporation.

Q. And that is the last you heard of any dealings between Mr. Brasile and the Ex-Cell-O Corporation?

A. That is correct, sir. That is, dealing so far as setting up that machine is concerned. If he had dealings in connection with it—you see, U. S. Carton Forming Corporation was leasing large Preformed machines customarily used by the dairies which is a hundred times more than this machine, any one of these machines here. It occupies al-

most this whole section of this room here. He may have had some dealings with them, when you say dealings in conjunction with the normal course of business, but not related to any filling machine other than sending that machine once. That is all I know about.

Q. Now in July and August of 1953, you were working with Mr. Brasile, were you not, in trying to bring out a new filling machine?

A. In July and August I was still the voting trustee of U. S. Carton Forming Corporation, the voting trustee of the other shares of stock, and as such and as president of Paper Pack Corporation and Pack Equipment Cor-
1216 poration, yes, we were consulting with each other, and after the breach of the contract with Mojonnier-Dawson we were talking about the possibility of him making that machine work.

Q. In that period were you acquainted with any work that Mr. Richardson was doing on the filling machine for Mr. Brasile?

A. As far as I know, and I think I do know, Mr. Richardson was not working at that time for a filling machine. We were largely talking about making an improvement of the hydraulic unit, making it an automatic instead of a foot pedaling device for the Mojonnier-Dawson machine, because we had a lot of customers that owned the Mojonnier-Dawson machine writing in letters, finding bad experience and having terrible trouble, and the thing was to alleviate something for those little dairies, finding something to alleviate their troubles.

The stapling unit, the bottles were not closing, and were leaking very badly. A great deal of effort, I think, was put in that. He tried to accomplish that, I mean. I believe Mr. Richardson—I did not at any time examine the detail
1217 work of Mr. Richardson, because it wasn't my business to do so, but I believe that is what he was working on.

1218 Q. Through July, August and September of 1953?

A. Probably, oh, 30 or 40 or 50 days, through August, I would say, of 1953, that was happening,—the latter part of August, September, as far as I know. It may have happened subsequently, which I knew nothing about because there was a period there when Mr. Brasile and I had some disagreements on and as to policy.

I was taken in for the purpose of developing policy, and he would not follow my advice in the matter, so we had an

estrangement develop in that period. I think it was September or October.

Q. I hand you a drawing marked Plaintiff's Exhibit 81, and ask whether you ever saw that.

A. This is the first time in my life that I have ever seen this drawing.

Q. In the fall of 1953, did you know anything about an Electrematic or electronic timer unit being sent by Mr. Brasile up to Ex-Cell-O for testing?

A. That I knew nothing about. If it was done by Mr. Brasile, it was during the period of the estrangement with me, and I knew nothing about it.

Q. Well, during that period, and we are talking about the fall of 1953, you were working with Mr. Brasile
1219 to bring out a new filling machine, isn't that correct?

A. That was prior to the estrangement I have just described which was sometime prior to September of —prior to October, I would say, of 1953. I can't remember the exact date. Then there was a breaking off when we didn't even taik to each other.

Q. Well, prior to your breaking off time then, what filling machine were you working on to bring out?

A. Prior to that time it was only the contemplated idea of developing something out of that machine, and the picture which he showed to me, which was an artist's conception of a machine which might be manufactured but was never manufactured by anybody.

Q. You mean you and Mr. Brasile were working to carry forward the development from this Defendants' Exhibit 33?

A. Particularly after the breach of the contract by Mojonnier-Dawson Company in the selling of their machines to U. S. Carton Forming, U. S. Filler and Preformed, the thought was—Mr. Brasile thought he might be able to modify that old machine there to a working
1220 machine, and that is what we had in mind. But nothing was ever actually done. It was only an idea.

Q. But you did continue working with Mr. Brasile to bring out a filling machine, though?

A. We did nothing actively to do so. The only thing that was done, as I explained before, was that this artist's conception was given to us. We wanted to test the market on a business plan in conjunction with it, and if we received some favorable results from it, that then we might

do it. In the meantime estrangement developed between Mr. Brasile and ourselves, and we separated and went our separate ways, so to speak.

Q. Before this separation from Mr. Brasile that you are talking about, I would like to have you reflect back on this filling machine that you said you and Mr. Brasile intended to bring out.

Isn't it a fact that that filling machine needed a stapling unit?

A. I didn't say that I intended to bring out any machine. What I said was that Mr. Brasile thought that he could take that machine and make something out of it after the breach of the contract by Mojonnier-Dawson.

After that the company had no machine to sell at
1221 all, and he had an idea.

I didn't intend to manufacture the machine or have anything to do with it. Mr. Brasile thought that he might be able to do something with that old machine, which was different, as he explained it to me, than anything that the Mojonnier-Dawson machine had.

Q. But that machine, which you say Mr. Brasile was intending to bring out, one carried forward from this Defendants' Exhibit 33, that would require a stapling unit, isn't that correct?

A. Well, all machines require stapling units. Even all the Ex-Cell-O machines because the Ex-Cell-O package is stapled. It is required by all machines even those made by Ex-Cell-O. There is nothing new about that.

1222 Q. Well, now, I am asking you, Mr. Lewis, what part you took in trying to develop a stapling unit for this Brasile machine.

A. Nothing at all. I explained before the only thing that happened there, by reason of the knowledge of the stapling unit on the Mojonnier-Dawson machine was working very badly for these dairies that had the machine, I did go to Pabich and Company with Mr. Brasile, who was trying with Mr. Pabich to buy a better stapling unit and better hydraulic unit, which at that time, Mr. Brasile intended to give Mojonnier-Dawson, or to service customers who had already bought the machine, which machines were giving bad service. That's all. I never went to anybody to talk about a stapling unit or anything else for that machine.

Q. Well, now, when you went to the Pabich Company, was that in the fall of 1953?

A. No. It must have been in the—by George, it was June, it was in July or thereabouts. That is about it, in the summer of 1953. I don't remember the exact date; it was in July or August. It wasn't in the fall, that I can recall.

Q. Are you acquainted with Mr. W. R. Pabich of
1223 the W. R. Pabich Company in Chicago?

A. I met him, on one, two or three possible occasions that I went to his plant. That's all I know about the man. I never did any business with him.

Q. Do you know Mr. Helffors who was an engineer in charge of the production of Pabich & Company?

A. I can't remember the name. Now that you are talking about, there was a gentleman working on the hydraulic unit, an improvement on the stapling unit for the Mojonnier-Dawson machine and I may have met him at one time on one of the visits at the Pabich Company.

Q. Why were you going up to the Pabich Company, may I ask?

A. Very simple. The big trouble of the U. S. Carton Forming Corporation was that they sold these machines and they were having such terrible trouble; the dairies were sending carloads and truckloads of cartons back. They were getting parts. They were sending out service men; they were losing a lot of money. There was something that had to be done to improve the conditions at those dairies on the machines they had.

1224 Mr. Brasile explained to me he had asked Mojonnier-Dawson time and again about it and Mojonnier-Dawson told him all he wanted was to sell machines.

These machines had to be corrected. Mr. Brasile knew these people and took me there and he diligently worked on that idea.

I was very much interested in getting something done, if I was getting something at all in the business, to cure the ills.

Q. When you went to the Pabich Company, it was for the purpose of inviting an improved stapling unit for the Mojonnier-Dawson filler, is that correct?

A. When I went to the Pabich Company, I went because of the invitation of Mr. Brasile. He explained to me—he was the one that was experimenting to find out what he could do to find that unit, the safety unit and the hydraulic unit, the seating device, that is correct.

Q. I am talking about when you went up to Pabich Company. Were you then discussing the Mojonnier-Dawson filler and the improvement of that by putting on an improved stapling unit?

A. As a matter of fact I did very little discussing.

1225 Mr. Brasile did all the discussing and I just stood by. At that time I knew less than I am familiar with now about these machines and I kind of stood by and watched, but I knew the purpose of going in there was to improve the stapling unit and the hydraulic unit. That was the purpose of doing it. They were stapling manufacturers.

1226 Q. What unit was that to be used on, the stapling unit? What filling machine was it to be used on?

A. There were machines that were being sold to the dairies who were doing business with U. S. Carton Forming Corporation and they were bad machines that they were having so much trouble with. In other words, here were 300 machines put out by U. S. Carton Forming, Mojonnier-Dawson machines and they were grabbing at those because there was no choice. But, it was a bad product and something had to be done to improve it.

They were suffering by that. My job was to find a cure to make this business go forward the right way and one of the cures was having satisfied customers. That was the objective Mr. Brasile was working towards. I went forward with him.

I would go anywhere with him; I would go anywhere with almost anyone that would advise on how to cure that situation and I did go to Pabich.

Q. Now in the deposition which we took of yours, on page 67, I asked you:

"Q. Did you call on them?"

and we were talking about the Pabich Company—

"—in connection with making the hydraulic unit

1227 for use on a filling machine?"

Your answer was:

"Not on a filling machine. What Mr. Brasile was doing, he was trying to help Mojonnier-Dawson Company make a better arrangement for the stapling and hydraulic unit and he was asking the Pabich Company to further experiment in connection with what he could do to help Mojonnier-Dawson improve their machine that they were having so much trouble with, and with the manufacture of it and they would try to do something about making a better

stapling unit and for use in the Mojonnier-Dawson machine."

Is that correct?

A. Well, sir, in that deposition, you asked me such direct questions that I couldn't make a more thorough and complete explanation but I now tell you it is correct in so far as the unit was intended, not by Mojonnier-Dawson but for the Mojonnier-Dawson machines that were sold and purchased by the dairies, 300 of them, approximately. They were already out in the field, sold to them, in the hands of the dairies and we were getting letters and
1228 wires and telephones, calls having a lot of trouble with the machines and that was to cure that trouble that the customers who had already bought their machines were having.

The main objective was to sell the cartons. If you had a machine that was defective, it would be giving them a lot of trouble and we couldn't sell them cartons. They did stop buying cartons and went back to glass bottles, not paper bottles, but glass bottles, many of them did so.

Q. Mr. Lewis, I am asking you whether you recall in the latter part of August, 1953, that you went to the W. R. Pabich Company and left there and ordered on the stationery of Pack Equipment Company a hydraulic unit to be purchased at a price of $250? Do you recall that?

A. It could be possible because that was intended, if he made one we wanted to try one out, or several of them to be sent to the customers of U. S. Carton Forming Corporation that had already bought a machine of Mojonnier-Dawson. That's all was intended, if it was so done.
1229 Q. But you placed this order in the name of Pack Equipment Corporation?

A. That is perfectly all right. It may be. Pack Equipment Company was intended to go and do the job of leasing these machines. We were going to deal with these customers of U. S. Carton Forming Corporation that had these machines. It could have been. It was not for any machines that were being manufactured. Let us get that straight.

Q. Well, as a result of this order that you placed with Pabich and as a result of your contacts with Pabich and Mr. Brasile's contacts with them, isn't it a fact that the Pabich Company proceeded to design a special stapling unit, a hydraulic unit for use of Mr. Brasile?

A. I never saw what they did. All I know is that the

order, if so placed, was merely intended to be a replacement on a unit to improve the condition that the dairies were having with the machines already bought through U. S. Carton Forming Corporation which were the Mojonnier-Dawson old machines and, if he ever made one, I never saw it. I never saw it finished. Certainly we never bought it. Certainly we never paid for it and we

1230 never got anything delivered from them, that is, U. S. Carton Forming Corporation didn't get anything delivered, Preformed didn't and I didn't, Paper Pack didn't get anything delivered or Pack Equipment didn't get anything delivered from Pabich & Company at any time. If Brasile subsequently got something, I know nothing about it.

Q. Well, I will ask you this: Isn't it a fact that in the fall of 1953, you also went to the plant of the Pabich Company and represented yourself as being the financial backer of the enterprise in which Mr. Brasile was involved in the making of milk fillers for paper cartons?

A. I just got through telling you that there was a separation of interests in about September of 1953 and I had no more reason to go anywhere with Mr. Brasile and certainly did not do so. If Mr. Brasile said so to him, I would not know anything about it. I did not say so.

Q. I am asking you now—

A. I did not go with Mr. Brasile for that purpose at any time.

Q. That isn't what I am asking you. What I am

1231 asking you is whether it isn't a fact you went up to Pabich in the fall of 1953 and told them that you were the financial person taking over?

A. When you say "fall," what do you mean, "fall"? If you want—

Q. I am asking you did you go there at all and tell them that?

A. No, sir.

Q. You never did?

A. No, sir.

Q. Did you tell them anything about taking over this filler business?

A. I did not tell them anything about taking over the filler business.

Q. Did you tell them anything about displacing Mr. Brasile in the operations that had been carried on between you and Mr. Brasile and Pabich?

A. I should say not. There was nothing—first of all, as I mentioned before, my entry into the picture as one of the voting trustees—I did not desire to make any changes, if there were any changes made, and there were none made until the other directors of their own volition dismissed Mr. Brasile on December 1, 1953. I had
1232 nothing to do with that and I certainly would have no occasion to tell that to Mr. Pabich. Mr. Brasile, I think, did. It appeared to me he may have told him that I was a financial man and as such, whatever interpretation he wanted to place upon it, for what reason he did that, I do not know, except in his own capacity. I did not know the reason I did not tell that to Mr. Pabich at the time.

Q. Now you mentioned here today, Mr. Lewis, that you went to the John S. Barnes Company in the fall of 1953. Is that the company in Rockford, Illinois?

A. It was before the fall of 1953. It was, yes, at Rockford, Illinois, that is correct.

Q. And why did you go there?

A. Well, when it appeared that Mr. Brasile and myself were not going to get along, I was still going to be interested in the U. S. Carton Forming Corporation as such, still interested in the customers and nothing have been accomplished in the way of ma- ng a unit that would be—that would correct the situation with the machines of the Mojonnier-Dawson Company, I went to ask them if they knew something about designing such a unit and if they could design such a unit for improvement of the
1233 Mojonnier-Dawson machine, which they never did do. No machine was ever bought; none was ever delivered. There was a discussion. They may have experimented a little bit, but they dropped it. We did no business with them.

1234 Q. Didn't you testify in your deposition that you asked someone from the John F. Barnes Company to go down to Woodstock and see a Mojonnier-Dawson machine?

A. Oh, yes, that could have been done, in explaining to them the necessity of having something to be done for the 300 customers.

I put it coldly to the John F. Barnes Company. I said, "Look, we have 300 customers that are having the Mojonnier-Dawson machines and they are having a great deal of trouble. Can you please do something to help

these people so they can get away from this foot pedal?"

They are hydraulic people and I said, "Can you do something about putting a power unit under that machine that they could buy?"

They examined the machine. They had to examine the Mojonnier machine, the Mojonnier-Dawson machine for that. It was an old machine, an old machine that was bought and sent back by one of the dairies that they stopped using altogether and that is what they went down to examine.

Q. What was done as a result of that?

A. As I said, they did some experimenting. They didn't finish any hydraulic units. We did not buy
1235 any; we did not pay for any. It just dropped, somehow. They developed, or they did not develop a proper unit and subsequently the interests of Mr. Brasile and myself were further thrown apart and so I didn't—I just kind of lost interest for the time being of doing anything more about it.

Q. Now in this dealing that you had with the Barnes Company about this hydraulic unit, do you know or did you show to the Barnes people the drawings that Pabich Company had made of a hydraulic unit?

A. I had no drawing of the Pabich Company unit, none at all.

Q. You know nothing about what the Pabich Company did as a result of their work?

A. No, I do not. I never had any drawings of the Pabich Company.

Q. And you have never seen any?

A. As a matter of fact, the Pabich Company, as far as I remember, was working on the stapling. They are stapling people. The Barnes Company were hydraulic people. The Barnes Company was thinking about trying to do something about a hydraulic unit. In other words, it was to change it from the pedal to an improved power unit.

1236 Q. And the work that the Barnes Company was doing then was, you say, not for any filling machine that Mr. Brasile was intending to bring out for the Mojonnier-Dawson machines that were used in the field?

A. Only for those Mojonnier-Dawson machines that we had previously sold prior to June 24, 1953, 300 of them, approximately.

Q. And the work that the Barnes Company and also

that the Pabich Company was doing, had nothing to do with any new filling machine?

A. So far as I know, it had nothing to do with it.

Q. It only related—

A. To the old fillers that were previously sold.

By Mr. McCanna: That is all.

Cross-Examination by Mr. Voland.

Q. Mr. Lewis, I believe you stated that the 50 per cent of the stock in Pack Equipment Corporation which Mr. Brasile was to receive, was issued?

A. Yes, sir.

Q. Was it delivered?

A. Yes, it was delivered and the fact that it was
1237 issued in his name.

Q. To whom was it delivered, Mr. Lewis?

A. It was delivered with the understanding—Mr. Brasile understood, in the presence of Mr. DeTolve and several other directors, he had agreed that that 50 per cent of the stock would belong to the U. S. Carton Forming Corporation because he was a minority stockholder in U. S. Carton Forming Corporation and I wanted to retain 50 per cent all the way through. That was the basis of the understanding.

He understood it was issued and, in fact, delivered to him but left with me as one of the trustees, for the purpose of putting it into the interest of U. S. Carton Forming Corporation stockholders.

1238 Q. Let me see. You say it was delivered to Mr. Brasile and by him redelivered to U. S. Carton Forming Corporation?

A. No.

Q. To whom was it delivered? That's all I want to know.

A. First of all, I explained to Mr. Brasile that the stock had been issued to him and he understood and he had agreed with Mr. DeTolve, one of the directors, and the other directors and myself, that that 50 per cent of the stock would and should belong to the stockholders of U. S. Carton Forming Corporation and that I would hold it for that purpose.

Q. So, it was delivered to you pursuant to that arrangement, is that right?

A. Well, no—well, yes, as trustee for the shares of stock of U. S. Carton Forming Corporation.

Q. So you have possession of that stock at the present time, do you?

A. Oh, yes, as trustee.

Q. Apart from the stock to which you have referred, does Mr. Brasile have any stock in U. S. Pack

1239 Equipment Corporation?

A. Aside from that, no.

Q. Has Mr. Eugene Blum any stock?

A. No, sir.

Q. Has he ever had?

A. No, sir.

Q. Now, as to Paper Pack Corporation, Mr. Lewis, does Mr. Brasile have any stock in that corporation?

A. No, sir.

Q. Has he ever had any stock in it?

A. No, sir.

Q. Does Mr. Eugene Blum have any stock in that corporation?

A. No, sir.

Q. Has he ever had?

A. No.

Q. Is either Mr. Brasile or Mr. Blum an officer or directors of either of those corporations?

A. Which ones?

Q. Paper Pack and Pack Equipment Corporation.

A. No, sir.

Q. Has either of them been an officer or director of those corporations?

1240 A. No, sir.

Q. Or financially interested in either of those corporations?

A. No, sir, except to the extent I have already mentioned, the shares of stock for the benefit of U. S. Carton Forming Corporation.

Q. Has Mr. Blum or Mr. Brasile ever been connected with the management of either of those two corporations?

A. No, sir.

Q. There was some reference in your testimony, Mr. Lewis, to the assignment of invention to Pack Equipment Corporation which, I believe, has been identified on this record as Plaintiff's Exhibit 105. Do you recall the document to which I am referring?

A. Yes, I do.

Q. Do you know whether at the time that that paper was executed and delivered to you, Mr. Brasile had any inventions in a filler machine other than those which are embodied in Defendants' Exhibit 33, which stands here (indicating)?

A. In fact, I know not what inventions he had.

1241 It was just explanations of what he had, statements, but I knew not exactly what he had.

Q. Mr. Lewis, I hand you a document which has already been marked as Defendants' Exhibit 34 for identification and purporting to be a copy of a notice dated August 31, 1953, signed by Maurice J. Brasile, addressed to Pack Equipment Corporation and to yourself, rescinding this assignment of inventions and ask you whether you received a signed original of that paper on or about the date it bears?

A. Yes, I did, and that is what developed the estrangement between us at that time.

Q. Did Pack Equipment Corporation also receive a signed original of that paper?

A. So far as I know, it did.

Q. And if I have a signed, returned receipt for receipt of that document by Pack Equipment Corporation, you wouldn't have any doubt about it, Mr. Lewis?

A. No, sir, not at all.

Q. Now, I believe you said that about December 1st of 1953—

A. About when?

1242 Q. About December 1, 1953—

A. Yes.

Q. —the directors of U. S. Carton Forming Corporation—

A. Yes, sir.

Q. —discharged Mr. Blum and Mr. Brasile?

A. I said they dismissed them.

Q. Dismissed them as officers?

A. That is right.

1243 Q. Did Mr. Brasile and Mr. Blum thereupon tender their resignations as directors?

A. Not then and there.

Q. When was that done, if you recall?

A. Within the last of December, 1953.

Q. That was done in writing, was it?

A. Yes, sir.

Q. I have asked your attorney to produce those resignations in court. Do you have them with you?

A. Ask my attorney.

By Mr. Kipnis: We have them here. We will have to take them out of the file.

By Mr. Voland:

Q. But you know these written resignations were received in the latter part of December, 1953?

A. Yes, sir. Yes, sir.

By Mr. Kipnis: We have photostats of them. Do you care to use them?

(Handing documents to counsel.)

By Mr. Voland: If Mr. McCanna has no objection, I would like to mark these photostatic copies of these resignations in lieu of the originals as Defendants' Exhibits 38, being the resignation of Mr. Brasile, and 39, the 1244 resignation of Mr. Blum.

Would there be any objection to that, Mr. McCanna?

By Mr. McCanna: Well, I think I would object. I think the people who wrote these should—

By Mr. Voland: I am not offering them at this time.

Will you please mark as Defendants' Exhibit 39 for identification the paper signed by Mr. Maurice J. Brasile, tendering his resignation as director of U. S. Carton Forming Corporation, and as Defendants' Exhibit 39 for identification the paper signed by Mr. Eugene Blum tendering his resignation as director of U. S. Carton Forming Corporation?

(Thereupon said documents were marked as Defendants' Exhibits 38 and 39, respectively, for identification.)

By Mr. Voland:

Q. Mr. Lewis, I hand you a paper which has just been marked as Defendants' Exhibit 38 for identification and ask you if that is a copy of the resignation of Mr. 1245 Brasile to which you have just referred?

A. Yes, it is.

Q. And I hand you a document which has been marked as Defendants' Exhibit 39 for identification and ask you if that is a copy of the resignation of Mr. Blum to which you have just referred?

A. Yes, sir, it is.

Q. Thank you. I believe you stated, Mr. Lewis, that

the dismissal or discharge, whichever you call it, of Mr. Brasile and Mr. Blum by the directors was something they did of their own volition or their own initiative.

Didn't you have anything to do with that?

A. Well,—

Q. Well, you persuaded them to do it, didn't you?

A. No.

Q. Well, tell us what you had to do with it then.

A. The early entry of this complaint—I went to my bank and obtained a loan for the benefit of U. S. Carton Forming Corporation. I believe it was thirteen or fourteen thousand dollars. A day later when I came in there was a question of paying some bills and I asked Mr. Brasile and Mr. Blum to pay some bills and they said they had no money.

1246 I said, "Just yesterday I handed you thirteen or fourteen thousand dollars. What did you do with it?"

They said they had paid it out for U. S. Filler Equipment Company, which was then fully controlled by Mr. Brasile so far as the stock was concerned, the owner, so I said—I disclosed it to the directors. We had a meeting about it. There was a great storm about it.

They requested the reasons why, of Mr. Brasile and Mr. Blum, was made. There was a further upset about it. The directors didn't like what Mr. Brasile and Mr. Blum were doing, so they, after, sure, after I disclosed that and other things that I heard of similar nature, then they took it upon themselves to dismiss Mr. Brasile and Mr. Blum.

Q. Didn't you at that time make a new arrangement with the stockholders of U. S. Carton Forming Corporation?

A. I made no arrangement. Whatever stock there was, was made with the voting trust agreement and was deposited on June 4th or soon thereafter. There was no new arrangement made by the stockholders.

Q. No new arrangement or understandings were entered into between yourself and U. S. Carton at that time?

1247 A. By that time, the condition of the companies—

Q. I am referring to December 1st, Mr. Lewis.

A. On or about December 1st, the voting trust certificate holders, they were then voting trust certificate holders as such, but not as stockholders, and the directors of U. S. Carton Forming Corporation did say to me and did enter into an agreement and it is in the minutes of the U. S.

Carton Forming Corporation records that if I wanted to continue to take hold and step in as president of the company, they would then have a price consideration, subsequently sell me some of their stock because the stock was depleted in value, to no particular value.

1248 Q. Now were Mr. Brasile and Mr. Blum parties to that agreement, Mr. Lewis, to that arrangement?

A. Not the agreement these directors made, which was only so far as personally, a voting trust agreement—not as to the corporation as a whole.

Q. But they were not parties to this agreement that you made? Isn't that true?

A. No, they were not parties.

Q. Mr. Lewis, I hand you a document which has been marked as Defendants' Exhibit 35 for identification and purporting to be a copy of a letter dated January 8, 1954, from myself, addressed to you, confirming the fact that Mr. Brasile and Mr. Blum have elected to rescind the voting trust agreement pertaining to shares of stock of Preformed Carton Corporation, and ask you whether on or about the date it bears, you received the letter of which that purports to be a copy?

A. I really do not recall ever receiving this letter. If you have a receipt from me, that would be prima facie that I did, but I don't actually recall it.

Q. Mr. Lewis, I hand you a document which has already been marked as Defendants' Exhibit 36, being a copy

1249 of a letter signed by myself, dated January 8, 1954, and addressed to you, stating that Mr. Brasile and Mr. Blum have rescinded the voting trust agreement pertaining to shares of U. S. Filler Equipment, Inc.

I call your attention to the fact that attached to this copy is a registered mail return receipt bearing your own signature and ask you whether or not on or about the date that copy bears, you received a letter of which that purports to be a copy?

A. You say this card bears my signature? I don't see it here. Where is my signature?

Q. (Indicating.)

A. That isn't my signature.

Q. Can you tell us who signed your name there?

A. That wasn't signed by me. The signature—I wouldn't sign my name "Mr. A. A. Lewis." And that isn't my signature.

Q. Do you know who signed that card?
A. No.
Q. Do you know who received the original of that letter?
A. I can't tell you that. I don't know. I honestly
1250 don't.
Q. Do you recognize the name that appears below your own name on this return receipt? The last name, I think, is Green. The first name, I can't make out.
A. I don't know who this is, Green. I don't know who this party is.
Q. I also hand you a document, Mr. Lewis, which has been marked as Defendants' Exhibit 37 for identification, being a copy of a letter written by myself to a number of people including yourself, dated January 8, 1954, and stating that:
"This letter confirms that Maurice Brasile and Eugene Blum have elected to rescind and have rescinded a certain agreement entitled Voting Trust Agreement pertaining to shares of stock of U. S. Carton Forming Corporation,"
and ask you whether you received the original of which that purports to be the copy?
A. Honestly, I don't recall getting this letter.
Q. You can't say you didn't receive it?
A. I really can't say. I don't know.
Q. You were certainly informed on many occa-
1251 sions, orally, each of the voting trust agreements were regarded by Mr. Brasile and Mr. Blum as having been rescinded, did you not?
A. I do not recall any oral statement to that effect.
Q. Since December 1, 1953, Mr. Lewis, has either Mr. Brasile or Mr. Blum had anything to do with the management of U. S. Carton Forming Corporation?
A. Since when?
Q. Since December 1, 1953.
A. No, sir.
Q. Who has possession of the stock of Mr. Brasile in U. S. Carton Forming Corporation, if you know?
A. The stock, the minority stock owned by Mr. Brasile in U. S. Carton Forming Corporation was turned over to me by Mr. Brasile pursuant to the conditions of the trust agreement of January 24th and I have possession of it as co-trustee with Mr. Brasile under that agreement.
By Mr. Kipnis: Was that June 24th?
By the Witness: How?

By Mr. Kipnis: Was that January or June 24th?

By the Witness: June. I think it was June 23rd
1252 or 24th of 1953, the date of that trust agreement.

By Mr. Voland:

Q. Is the same true as to the stock of Mr. Eugene Blum in U. S. Carton Forming Corporation?

A. The same is true of Mr. Eugene Blum.

Q. You have not surrendered any of that stock pursuant to the demand of Defendants' Exhibit 37?

A. There was never any demand made.

Q. If you received that letter and a demand was contained in it, such a demand was made, wasn't it?

A. I didn't say I received such a letter and I honestly don't know.

Q. Since December 1, 1953, Mr. Lewis, have you been in charge of the assets of U. S. Carton Forming Corporation?

A. Since when?

Q. December.

A. Only as an officer. I am not a director.

Q. Since that date—

A. Since what date?

Q. Since December 1, 1953, have you collaborated, corroborated, consulted, or advised in any way with Mr.
1253 Brasile?

A. No.

Q. Has Mr. Brasile collaborated, corroborated, consulted or advised with you, in any manner?

A. No, sir.

1254 Q. To shorten it up, after that date, you went your way and he went his way?

A. And before that date.

Q. And since that date, at least, you have been in control of U. S. Carton Forming Corporation, U. S. Filler and Preformed Carton Corporation?

A. Control, to be exact, only means this: I am president. I am not a director of U. S. Carton Forming Corporation. I am only a voting trustee of the stock of U. S. Filler and only a voting trustee of the stock of Preformed and not in terms of running your own business.

Q. Do you know of your own knowledge whether Mr. Brasile or Mr. Blum has anything to do with the management of those companies since that date?

A. I know they have nothing to do with it.

Q. They have gone their way with their own sales in Purity Pack, U. S. Dairies and Milk Container?

A. Yes.

Q. Do you have anything to do with those companies?

A. No.

Q. Do you own any stock in those companies?

A. No.

Q. Were you an incorporator of any of them?

1255 A. No, sir.

Q. Were you a director or officer of those companies?

A. No.

Q. Have you participated in the management of those companies in any way?

A. No, sir.

Q. So far as you know, is there any connection between those groups of corporations being presently controlled by Mr. Brasile and Mr. Blum and those to which you have referred, namely U. S. Carton, U. S. Filler and Preformed?

A. I am saying there is definitely no connection.

By Mr. Voland: That is all.

By Mr. Kipnis: Mr. McCanna, I asked you to produce the letter which Mr. Mojonnier testified he gave to Mr. Lewis on June 24, 1953. Do you have it with you? May I use this carbon copy?

By Mr. McCanna: Well—

By Mr. Kipnis: I will ask Mr. Lewis some other question.

By the Court: We will recess at this time until 2:00 o'clock.

1256 (Whereupon a recess was taken in the above entitled cause until 2:00 o'clock p. m. of the same day, Tuesday, May 31, 1955.)

1257 Chicago, Illinois,
Tuesday, May 31, 1955,
2:00 o'clock p. m.

Court convened pursuant to adjournment.

Present:

Mr. McCanna,
Mr. McKnight,
Mr. Pillote,
Mr. Allen,
Mr. Clement,
Mr. Voland,
Mr. Houghteling,
Mr. Bernat,
Mr. Kipnis,
And other Counsel.

1258 And thereupon the following further proceedings were had herein:

By the Clerk: Case on trial.
By the Court: Proceed, gentlemen.

ALBERT A. LEWIS, called as a witness on behalf of the Plaintiff, having been previously duly sworn and examined, resumed the stand and testified further as follows:

Cross-Examination (Continued) by Mr. Kipnis.

Q. Mr. Lewis, I hand you Plaintiff's Exhibit 103, which is a circular distributed by Paper Pack Corporation, and Plaintiff's Exhibit 109, filling machine lease, distributed by Pack Equipment Corporation.

Will you tell the Court what was the reaction of the trade to those circulars?

A They wanted to see the machine, but we had none to show them. As a result, the reaction was very bad. We got a few requests for orders and a few deposits were sent in, not more than four or five, and when we found that no machine could be made available, we sent all of the
1259 money back to the people who sent in the deposits.

Q. When did you send all the money back?

A. Immediately, within a space of a week or two of the time of receipt.

Q. Can you give us the month approximately?

A. Approximately, I would estimate, in October.

Q. Of what year?

A. Of 1953.

Q. Was that machine shown in Plaintiff's Exhibit 103, and which I understand is substantially the same as Defendants' Exhibit 33, ever manufactured or sold by you or anyone connected with your companies?

A. No.

Q. Or by any of your companies?

A. No.

Q. Mr. Lewis, what if anything did you have to do with the manufacture or sale of the accused machine, which is marked in evidence as Plaintiff's Exhibit 40? Did you have anything to do with the manufacture, use or sale of that machine?

A. Nothing whatsoever.

Q. Did U. S. Filler Equipment, Incorporated, have anything to do with the manufacture, use or sale of Plain-
1260 tiff's Exhibit 40?

A. Nothing whatsoever, no.

Q. Did U. S. Carton Forming Corporation have anything to do with the manufacture, use or sale of Plaintiff's Exhibit 40?

A. No.

Q. Did Paper Pack Corporation have anything to do with the manufacture, use or sale of Plaintiff's Exhibit 40?

A. No.

Q. Did Pack Equipment Corporation have anything to do with the manufacture, use or sale of Plaintiff's Exhibit 40?

A. No.

Q. Since December 1953, have you or any of the last mentioned corporations manufactured a filler for sale, any filler of any kind for sale?

A. No.

Q. Have you or any of the corporations mentioned, U. S. Filler Equipment, Incorporated, U. S. Carton Forming Corporation, Paper Pack Corporation or Pack Equipment Corporation, since December, 1953, sold any type of
1261 filler of any kind for filling paper cartons?

No. You are talking about U. S. Carton Forming?

Q. Yes.

A. U. S. Paper Pack Corporation, Pack Equipment Corporation—

Q. And U. S. Filler Equipment.

A. U. S. Filler Equipment—no.

Q. You mentioned a trip you made to Pabich. Did you at any time make trips to interview customers who had purchased Mojonnier-Dawson machines in company with Mr. Brasile?

A. Yes, I did. I made quite an extensive tour around the country to visit the jobbers that were established by U. S. Carton Forming, and those jobbers that sold for and on behalf and with U. S. Carton Forming the Mojonnier-Dawson machines.

1262 Q. When did you make that trip?

A. I must have made that trip in July, the latter part of July or August of 1953.

Q. Did you have anything to do with the sale of Ex-Cell-O machines since December, 1953? Have you sold Ex-Cell-O machines?

A. Yes, I have sold Ex-Cell-O machines since 1953.

Q. That is Ex-Cell-O milk fillers for filling milk cartons?

A. Yes, manufactured by Ex-Cell-O Corporation, that is correct.

By Mr. Kipnis: That is all.

By Mr. McCanna: Just a few questions.

Redirect Examination by Mr. McCanna.

Q. Mr. Lewis, you have a new corporation, isn't that correct, for selling milk fillers?

By Mr. Kipnis: I object to that, your Honor. That new corporation is not a part of this lawsuit.

By Mr. McCanna: You have asked about selling Ex-Cell-O machines, and I just want to connect up that these Ex-Cell-O machines that the witness says he is sell-

1263 ing are made by a corporation of his own, rather, sold by a corporation of his own.

By Mr. Kipnis: Ex-Cell-O is not charged to infringe. I just wanted to clear up the fact that the witness had sold filler machines, but they were manufactured by Ex-Cell-O Corporation. That hasn't anything to do with this lawsuit.

By the Court: What difference does it make?

By Mr. McCanna: That he is right at this minute a competitor of the Mojonnier-Dawson Company.

By the Court: Well, that is the only ground I could imagine that it would be material. Don't spend too much time on it. Go ahead.

By Mr. McCanna: I have just two questions.

By Mr. McCanna:

Q. You have a new corporation for selling those Ex-Cell-O machines?

A. I own a corporation that is now selling a machine manufactured by Ex-Cell-O Corporation.

Q. What is the name of that company?

A. Automatic Packaging Equipment.

Q. Is it a fact that that company has only sold
1264 about, what, ten, eleven, or twelve Ex-Cell-O machines?

By Mr. Kipnis: I object.

By the Court: I don't see how that could help you.

By Mr. McCanna: I will withdraw that.

By Mr. McCanna:

Q. Aside from that Ex-Cell-O machine, you have another filler machine for filling paper cartons, isn't that correct, now on the market?

A. We have been contemplating putting another machine on the market, the Automatic Packaging, all within the past few months.

Q. And that machine would be competitive with the Mojonnier-Dawson Electromatic machine, isn't that correct?

By Mr. Kipnis: I object, if the Court please.

By the Court: Well, he may answer it.

By the Witness:

A. I don't know if it would be competitive or not.

By Mr. McCanna:

Q. Is it sold to small dairy plants?

A. Yes.

By Mr. McCanna: That is all.

1265 By Mr. Kipnis: That is all. Step down, please.

(Witness excused.)

By Mr. Voland: I would like to make a statement for the record, if the Court please.

We have compared the photostatic copies of the voting trust agreements, being Plaintiff's Exhibits 93, 94 and 95,

with the duplicate originals in our possession, and find that they are correct, with the exception of the underscoring, which of course does not appear in the original papers, and there are certain marks for emphasis in the margins which likewise do not appear in the originals. But otherwise the copies are true and correct copies.

By the Court: Very well.

By Mr. McCanna: If your Honor please, I have two short depositions I would like to read. One is by Frank G. Brooks.

By the Court: What is the name? Frank G. Brooks?

By Mr. McCanna: Frank G. Brooks.

I will ask the reporter to please mark that deposi-
1266 tion as Plaintiff's Exhibit 110 for identification.

(Said document was marked Plaintiff's Exhibit No. 110 for identification.)

1267 By Mr. McCanna: Mr. McKnight will respond to the questions, please.

This deposition was taken on April 7, 1955, at the office of Brooks Supply Company, Third and Michigan, in Joplin, Missouri.

I took the deposition and Mr. Kipnis was present, by special arrangement appearing for all of the defendants. The deposition was taken pursuant to notice. I called Mr. Frank G. Brooks.

"FRANK G. BROOKS, of lawful age, being produced, sworn and examined on the part of the Plaintiff, testified as follows:

Direct Examination by Mr. McCanna.

Q. Please state your name.
A. Frank G. Brooks.
Q. And your age?
A. 55.
Q. Your residence?
A. Our home is in Dallas.
Q. What is your occupation?

A. President of Brooks Supply Company and Gen-
1268 eral Manager.

Q. Is that a corporation?
A. It is.

Q. Of what state?
A. Missouri.
Q. And its place of business?
A. Third and Michigan, Joplin, Missouri.
Q. State briefly the nature of the business of Brooks Supply Company.
A. We sell a complete line of dairy machinery and supplies, including paper carton fillers and preforming Pure-Pak paper cartons.
Q. What territory is covered in your sales work?
A. We cover nine states, Arkansas, Oklahoma, Kansas, Missouri, Texas, Louisiana, Mississippi, East New Mexico, and Tennessee.
Q. About how many salesmen do you have covering this territory?
A. At the present time 15, approximately 15.
Q. Have you had more or less than that?
A. We have had more and we have had less.
Q. How long have you been in this business?
A. 27 years.
Q. Do you know the Mojonnier-Dawson Company
1269 of Franklin Park, Illinois?
A. Yes, sir.
Q. Do you sell their products?
A. I think we began selling their products about 1946.
Q. You mentioned the sale of fillers. Do you sell any fillers made by the Mojonnier-Dawson Company?
A. Yes, sir.
Q. About how long have you been selling fillers made by them?
A. I think it was in October, 1952, when we started selling their fillers.
Q. Briefly, just what do these fillers do?
A. They fill paper Pure-Pak cartons with milk for the dairies.
Q. Any particular type of dairies? I mean, are they large dairies or small dairies?
A. The small and medium sized dairies, I believe, would be the way to talk of this filler. Of course, there are some large dairies that use them but most of them are small and medium sized.
Q. What is the reason for that?
A. Well, if a dairy is large enough to sell one
1270 hundred thousand or over half gallon cartons it is more practical for them to lease the Ex-Cell-O ma-

chines rather than buy our small machines. I shouldn't say 'our' machine. I mean the Mojonnier-Dawson machine.

Q. This Ex-Cell-O machine which these large dairies might use, just what does that machine do?

A. The Ex-Cell-O machine forms the carton and fills it with milk.

Q. Those machines sell to the dairy for about how much?

A. They are not sold to the dairies. They are only leased to them. It runs approximately $900.00 a month.

Q. So that if a small dairy wants to use Pure-Pak paper cartons, where does it obtain these cartons usually?

A. We furnish a great number of the dairies their cartons from our preforming operation in Joplin.

Q. Do you actually operate a preforming operation and manufacture these cartons?

A. We preform the cartons. I wouldn't say manufacture. We consider the preforming as a service
1271 job. The flat cartons come to us—

Q. That is the blanks?

A. That is the blanks, some with the customer's name on it, some blank. Then we render the service of preforming these cartons and putting them on delivery to these dairies for them to use with Mojonnier-Dawson fillers to fill them with milk and then for resale.

Q. Do you know Maurice J. Brasile?

A. Yes.

Q. About how long have you known him?

A. Since October, 1952.

Q. Do you recall how you happened to make his acquaintance?

A. Yes. We were at the dairy show in Chicago, and we learned of the demand, the great demand for fillers. Mr. Davis, Mr. Lee Davis, took us over to Mojonnier-Dawson plant, the manufacturing company, to show us a machine that he was having made there, and while there Mr. Allen met Gene Blum who requested that we contact Maurey relative to the distribution of the Mojonnier-Dawson machine like they were selling.

Q. By Mr. Allen, you mean.

1272 A. Maybe I should go on a little bit farther. Then we got back to the hotel in Chicago we met Maurie Brasile and a meeting was arranged—''

By Mr. McCanna: No.

(Reading):

''When we got back to the hotel we called''.

"A. We called Maurie Brasile and a meeting was arranged for the following Saturday morning at Woodstock.

Q. When you say 'we', who do you mean?

A. Mrs. Brooks, Mr. Carl Allen and myself."

By Mr. McCanna: I will ask this question. Mr. Kipnis asked it.

"Q. Who did the telephoning?

A. Mr. Allen. As an explanation I was sitting next to Mr. Allen—"

By Mr. Kipnis: Pardon me. I object to the conversation. The witness admitted he did not call Mr. Brasile.

1273 By Mr. McCanna: Well, then, the witness goes on to explain what the situation was and how he heard the telephone conversation knowing it was with Mr. Brasile.

By the Court: Oh, I don't know.

By Mr. McCanna: (Reading):

"A. As an explanation I was sitting next to Mr. Allen when he was doing—"

By Mr. McCanna: Pardon me a minute.

By the Court: I don't know. If it isn't admissible, well, then strike the answer.

By Mr. McKnight: (Reading):

"* * * When he was doing the calling and we were waiting to leave Chicago until that conversation was made. Mr. Allen talked to Mr. Brasile and then talked to me and arrangements were made for a meeting on Saturday morning.

Q. Was that at Woodstock, Illinois?

A. That might have been Friday. It was at Woodstock.

Q. And did you meet with Mr. Brasile at Woodstock?

A. We did.

Q. Tell us briefly about that.

A. We were there about nine o'clock and—

1274 Q. (Interrupting.) A.m.?

A. In the morning and we talked about the machine and arranged for the distribution of the machine. He left and went downtown for his attorneys draw up the lease agreement and then he came back and the lease agreement was signed."

Br. Mr. Kipnis: That was incorrectly read.

By the Court: What is that?

By Mr. Kipnis: That was read incorrectly. It should be "He left."

By Mr. McKnight: (Reading):

"A. He left and went downtown to have his attorneys draw up the lease agreement and he came back and the lease agreement was signed.

Q. This machine you are talking about was what?

A. It was called the Mojonnier-Dawson CP machine, CP model.

Q. I hand you a paper, and ask whether you can identify that.

A. This is an agreement that I have signed but it seems to me that there was some discussion because the company, the U. S. Filler Equipment Company, didn't have their corporate seal and either this contract had to be returned or was recopied, I am not positive which. Anyway,
1275 that was practically the same contract relative to the U. S. Filler seal, they didn't have it at that time.

Q. But there is a seal on there now?

A. There is a seal on here now. Going back that far I can't remember exactly how this contract was handled other than this is my signature on this contract and whether it is the first and only contract, I can't tell you.

Q. You have had this contract in your possession ever since this was made out?

A. Since the seal has been put on it, yes.

Q. And you have operated under that contract?

A. Yes.

Q. Approximately how long?

A. Well, let's see. That was about two years, October, 1952—about a year and a half, I guess it was.

Q. This contract says in the first whereas clause:

'Seller is engaged in the business of the promotion of distribution of milk filling devices for the semi-automatic filling with milk of pre-formed paper cartons; a description of specifications for said device being set forth
1276 in a brochure attached to and incorporated as a part of this contract by reference thereto.'

I notice there is no brochure attached to this contract, do you know anything about that?

A. As I recall they didn't have any literature at that time and they were going to mail us some as soon as they got some of the literature in.

Q. Do you know who was the manufacturer of the milk filling devices mentioned in this contract?

A. Mojonnier-Dawson.

Q. I hand you a circular and ask you what that is.

A. This is one of the folders we have received from U. S. Filler Company showing the machine that we were to sell.

1277 Q. Does this circular which I have just handed to you have anything to do with this agreement dated October 1, 1952, which you have just told us about?

A. This was the filler we were to sell under our contract."

By Mr. McCanna: Now we would like to have the notary, or the Reporter here mark this contract as Plaintiff's Exhibit nine—it is already Plaintiff's Exhibit 98 in this case and I am just wondering whether we could ask the Reporter, your Honor, to transpose these numbers, Exhibit C, which would facilitate our moving along here—transposing them to the exhibit numbers that we have in the case, whether that would be—

By the Court: How is the paper marked?

By Mr. McCanna: It was originally marked by the Reporter as Plaintiff's Exhibit C at the time of taking the deposition.

By the Court: Has it been offered here?

By Mr. McCanna: It has been offered here and accepted.

1278 By the Court: Well, you just stated in the record what the fact is and I don't hear any objection. Therefore, it is a fact.

By Mr. McCanna: And at that time, the circular was marked for identification and that circular is now Plaintiff's Exhibit 99 in this case.

* * * * *

By Mr. McCanna: (Reading):

"Q. During your operation under this contract, Plaintiff's Exhibit 98, did you sell any of these Mojonnier-Dawson fillers?

A. Yes, sir.

Q. Approximately how many?

A. I think it was over 50.

Q. Prior to this time, that is, prior to the selling of these Mojonnier-Dawson fillers, had you sold to your trade any other make of filler for filling milk into paper cartons?

A. Not for filling paper cartons.

Q. For filling what?

A. We have sold fillers for filling glass bottles.

Q. Did you have any occasion while you were
1279 under this contract with U. S. Filler Equipment, Inc. to consider any other filler machine supplied by Maury Brasile?"

• • • • •

"A. I did.

Q. Will you please tell us about that?

A. Well, we received a call from Mr. Brasile that he would like to have a sales meeting in Woodstock to show us a new machine he had. Of course, this was the second time that this had been brought up. One time previous to that, I would say about three months prior to that, Mr. Brasile showed us a machine that he was working on in the back end of a garage.

Q. Showed it to whom?

A. Carl Allen and myself.

Q. And where was this garage?

A. In Woodstock a few blocks from the present location of U. S. Filler and he showed us at that time. I believe he had a Mr. Jack Richards working on it and developing it and it was a very crude model.

Q. Is that Richardson?

A. Yes, that is what it is, Jack Richardson, and there was another man there. I understood he was the
1280 owner of the garage or an employee of the company there.

Q. At that time, this earlier occasion, do you recall the purpose of that meeting?

A. Which meeting?

Q. The earlier one?

A. Well, that was one of the monthly trips that we had been making to Woodstock.

Q. Do you recall about what was said at that meeting in regard to this machine?

A. Well, in substance it was that we were going to build a better filler than the present machine that we were selling.

Q. What machine was that?

A. The Mojonnier-Dawson.

Q. When you say 'they' who do you mean?

A. I mean Maurey Brasile. The conversation was with Maurey Brasile and he said, 'we'.

Q. At that time do you recall whether anything was said by Maurey Brasile about the Mojonnier-Dawson Company in connection with this machine?

A. Well—"

By Mr. Kipnis: All right.

* * * * *

1281 "A. You mean the exact words that went on?"

* * * * *

"Q. Just to the best of your recollection.

A. Mr. Brasile said they thought they would have this machine ready to put on the market in about sixty days and, of course, it was to remain a secret, no one was to know anything about it. He had it completely away from the other business. It was shown to us in strict confidence and we in turn didn't mention it to anybody. That was the reason why he showed it to us and it was distinctly understood it was still an experimental model and they had reason to believe they could produce a better filler within a short time to take the place of the present filler they were selling to us, which was the CP filler.

Q. CP Mojonnier-Dawson filler?

A. Yes, that's right.

Q. Now, Mr. Brooks, you told about a later meeting, sales meeting, I believe, in response to a phone call from Mr. Brasile. Will you tell us more about that, please?

A. We had a call from Maurey Brasile request-
1282 ing that we bring the boys up to Woodstock for a sales meeting and at that time he would show us a new machine which was a development from the machine they had at the garage."

* * * * *

"Q. Did anybody attend this sales meeting other than yourself?

A. Yes.

Q. Who?

A. Mr. Carl Allen and we took seven or eight of the other fellows with us, our salesmen, to Woodstock. We went up there, we drove all night, and got in there and was shown the machine the following morning by Mr. Maurey Brasile and at the time of the meeting Gene Blum was there and Mr. Jack Richardson was called in because they had a little trouble with the machine and they called him in to adjust it.

1283 Q. When did that meeting take place?

A. May I refer to a record there to be sure of the date?

Q. Does this refresh your memory, this piece of paper I am handing you?

A. Yes, this receipt is where I paid for the hotel rooms at the Ace Hotel at the time the meeting was. The date doesn't necessarily mean the date the sales meeting was. The other boys started back and I am not sure whether Carl and I stayed over another day or not but it was on or approximately June 10 that we had the meeting. That is the receipt where I paid the hotel bills for the salesmen we had up there at that meeting."

By Mr. McCanna: Will the reporter please mark this receipt as Plaintiff's Exhibit 111 for identification?

By Mr. Kipnis: What is the exhibit number?

By Mr. McCanna: And I will offer this in evidence.

By Mr. Kipnis: What is the exhibit number?

By Mr. McCanna: 111.

By Mr. Kipnis: May I see it?

By Mr. Voland: Is this identified on the depos-
1284 tion?

By Mr. McCanna: Yes.

By the Court: It may be received.

(Thereupon said document was marked Plaintiff's Exhibit No. 111 for identification and was received in evidence as PLAINTIFF'S EXHIBIT NO. 111.)

By Mr. McCanna (Reading:)

"* * * Now, Mr. Brooks, do you recall what was said at that meeting?

A. The sales meeting?

Q. Yes.

A. Well, Mr. Brasile showed us the machine and told us that that was a machine that they were going to have manufactured and at that time they thought it would be manufactured by the Ex-Cell-O Manufacturing Company; that he could tell the trade they would be able to make delivery on this machine in three or four weeks; that the price would range from $2500 to $3000. At the same time he told us there would be some improvements on the ma-
chine, such as having an apron on the front of it.
1285 The machine we saw was very crude, just made out of black iron and a galvanized tank, but he assured us the machine, when they did manufacture it, would be made out of stainless steel and have a stainless steel apron so it would be a much better looking machine.

Q. Did Mr. Brasile say anything about who would manufacture this machine?

A. He said that the Ex-Cell-O Manufacturing Company would manufacture it, that the arrangements hadn't been definitely made and as I recall stated the reason why the sales meeting was called at that particular time was he was going to send his model, the pilot model, to Ex-Cell-O from Woodstock as soon as our sales meeting was over.

Q. The same machine that he showed you?

A. Yes, the same machine that he showed at the meeting.

Q. Was any demonstration made of that machine at that time?

A. Yes.

Q. Briefly, what do you recall of that?

A. I believe there was about 25 or 30 cartons run through the machine and they had a little trouble with the stapling unit and didn't run any more through be-
1286 cause they had to get Mr. Jack Richardson to make adjustments and that was along about lunch time and then we went to lunch and didn't see the machine after that.

Q. Was milk used in the tank and filled into the cartons?

A. No, as I recall just dry cartons were put through.

Q. Did Mr. Brasile at that time give you anything to show what this machine would look like, the filler?

A. As I recall he had an artist's drawing of the filler, the way it was going to look so we could show it to the salesmen, but he promised he would mail us enough of the photographs of the artist's drawing so we could give one to each of the salesmen to use in their sales work and we did get these pictures of the artist's drawing, I would say, in the next three or four days.

Q. I hand you a photograph and ask whether you can identify that.

A. This is the picture of the artist's drawing which he mailed to us at a later date some three or four days after the sales meeting.

Q. Is that one of the actual photographs which you received from him at that time?

1287 A. Yes, sir."

By Mr. McCanna: I have here the photograph which was identified by the notary at the time of the depo-

sition and I will ask the reporter to mark that as Plaintiff's Exhibit 112 and I offer it into evidence.

(Thereupon said document was marked Plaintiff's Exhibit No. 112 for identification.)

By Mr. Kipnis: Have you had it marked already?

By Mr. McCanna: It just happens that this particular one was received by Mr. Brooks and I wanted that in the record, the fact that he had received this particular photograph.

By the Court: Any objection?

By Mr. Kipnis: No objection.

By the Court: It may be received.

(Said document, so offered and received in evidence, was marked PLAINTIFF'S EXHIBIT NO. 112.)

By Mr. McCanna: (Reading.)

"* * * I hand you another photograph and ask whether you know anything about that.

A. This looks like the machine that I saw them
1288 working on in the garage and also the one that was shown at the sales meeting to us, the machine that I would say they dressed up on the artist's drawing and mailed the cuts on the previous picture here."

By Mr. McCanna: Now this photograph was marked at the time as Plaintiff's Exhibit G and I am now asking the reporter to mark it as Plaintiff's Exhibit 113.

(Thereupon said document was marked Plaintiff's Exhibit No. 113 for identification.)

By Mr. McCanna: And I offer it in evidence.

By the Court: Any objection?

By Mr. Kipnis: No objection, your Honor.

By the Court: It may be received.

(Said document, so offered and received in evidence, was marked PLAINTIFF'S EXHIBIT NO. 113.)

By Mr. McCanna: (Reading.)

"* * * Now, at this sales meeting were you authorized to take orders for this filler machine which you have here told about?

A. Yes, sir.

Q. Who authorized you to do that?

1289 A. Mr. Morrie Brasile.

Q. And at that time—"

By Mr. McCanna: Strike the previous question and I will ask:

By Mr. McCanna: (Reading.)

• • • • •

"do you recall anything further that Mr. Brasile said to you at that meeting?

A. Mr. Brasile told us that we could go out and sell this new machine; that we could guarantee the customers that he would be able to make delivery in three or four weeks and the list price of the machine would range between $2500 and $3000. The price and delivery date was questioned by me and Mr. Brasile definitely stated there would be no reason why sales could not be made and the price would range around the $3000 price.

1290 "Q. At that time, Mr. Brooks, you had a contract with U. S. Filler Equipment, this contract of October 1, 1952, for the sale of these Mojonnier-Dawson machines, isn't that correct?"

• • • • •

"A. As I recall in the contract it definitely states that we will be furnished the Mojonnier-Dawson CP fillers and it definitely states in the contract they will furnish any and all fillers we can sell.

Q. I understand that was what your testimony was earlier except the brochure which was to be attached to the contract and isn't actually on there now, and as I understand your testimony the machine, the filler machine covered by this contract of October 1, 1952, is the one shown on Plaintiff's Exhibit 99, which you identified?"

• • • • •

"Is there any question, Mr. Brooks, as to what machine you were selling under this contract of October 1, 1952?

A. No question in our minds as to the filler we were to sell.

Q. What was that?

1291 A. The Mojonnier-Dawson CP filler.

Q. And you sold some fifty of those machines?

A. Sold over fifty of them.

Q. Now you have just testified, Mr. Brooks, as to what Mr. Brasile had told you at that sales meeting in June of 1953. Did he at that time say anything about Mojonnier-Dawson?"

• • • • •

"Do you recall anything further said by Mr. Brasile at that time?

A. You are talking about the sales meeting?

Q. Yes.

A. Well, at the meeting the new type machine was demonstrated, the price was given to us and the delivery date which we could assure the customer. The reason why the sales meeting was called on short notice was that Mr. Brasile told us over the telephone as well as at the sales meeting this machine was going to be shipped to Ex-Cell-O Corporation immediately after our meeting for them to use as a pilot model to build more machines according to the pilot model, which is similar to the cut which you showed me.

Q. And was anything said at that time by Mr.
1292 Brasile about Mojonnier-Dawson?"

"A. The conversation had been for quite some time that Maurey Brasile wasn't satisfied with the machine he was getting from Mojonnier-Dawson and they were going to be using the new machine to replace the Mojonnier-Dawson filler and it was definitely stated that this machine would replace the one that he had been selling. There was nothing mentioned about changing our contract on the two machines at all.

Q. Were you authorized to disclose this to Mojonnier-Dawson?"

"A. For the past three months prior to the sales meeting after we had been shown the original pilot model it was definitely understood and agreed that we wouldn't mention this until they were ready to come out with the pilot model. Of course, at the sales meeting as he came out with it, it released us from any conversation about the two machines. I don't recall anything definite at the sales meeting that we were not to tell anybody about it at that time, but prior to that there had been conversations
1293 and a meeting in secrecy that we were not to say anything about it until they were ready to announce it.

Q. Did you or your company do anything in response to this announcement of Mr. Brasile's at the sales meeting?"

* * * * *

"A. After this sales meeting our boys went out and talked this new machine and we took an order for one in Kansas and sent the order in to U. S. Filler. They acknowledged the order and wrote and asked us for a down payment on the machine.

Q. I hand you a paper and ask whether you can identify that.

A. This is a copy of the requisition wherein we ordered the first machine. That is dated 6/26. The U. S. Filler Company ought to have the original."

* * * * *

"Q. Do you know who or where this paper, which you said was an order or copy of an order, was prepared?

A. This was prepared in the Joplin office.

Q. Of Brooks Supply Company?

A. Yes.

1294 Q. Was that prepared in accordance with your regular practice of doing business?

A. Yes, sir.

Q. What does that X-690 mean?

A. That is our requisition number which would correspond to the customer's order, Broadview Dairy, Topeka, Kansas.

Q. Do you recall which one of your salesmen made this sale?

A. Mr. Bob Mort.

Q. Did you have any knowledge of this order when it was made?

A. Yes, sir, I OKed the acceptance of the order.

Q. I notice this order states 'One automatic Ex-Cell-O Pure-Pak carton filler to fill one-half pints, one-third quarts, quarts, and one-half gallon cartons.' What filler machine does that refer to?

A. The machine that was shown to us at the sales meeting. Mr. Mort was there at the sales meeting. He saw it and on our instructions he went ahead and sold this machine."

By Mr. McCanna: At that time, I asked the U. S. Filler to produce the orignal order but that has never been

1295 followed up and we have this, which I believe is an original carbon, and it has been marked in here as Plaintiff's Exhibit 100 and it has been offered into evidence.

By the Court: Any objection?

By Mr. Kipnis: No objection, your Honor.

By the Court: It may be received.

(Said document, so offered and received in evidence, was marked PLAINTIFF'S EXHIBIT No. 100.)

By Mr. McCanna: (Reading.)

* * * * *

"Did you have any further dealings regarding this order?

A. Yes, sir, on the order we sent in for the Broadview Dairy at Topeka we got a letter from U. S. Filler asking for $1,000 down payment.

Q. I hand you a letter dated July 1, 1953 on a letterhead of U. S. Carton Forming Corporation and ask if that is the letter to which you refer.

A. Yes, sir.

Q. You received this letter in the mail?

A. Yes, sir, that is the letter I referred to a moment ago wherein they asked for a downpayment of
1296 $1,000 in advance for the Broadview filler."

By Mr. McCanna: This letter has been marked in this case as Plaintiff's Exhibit 101 and it has already been offered in evidence.

By Mr. Kipnis: No objection, your Honor.

By Mr. Clement: No objection.

By the Court: It may be received.

(Said document, so offered and received in evidence, was marked PLAINTIFF'S EXHIBIT NO. 101.)

By Mr. McCanna: (Reading.)

* * * * *

"Q. Did you respond to this letter from U. S. Carton dated July 1, 19[illegible]?

A. I didn't.

Q. Do you know whether or not there was any response?

A. Mr. Carl Allen answered it.

Q. Did you have any knowledge of this?

A. Yes, I knew about it and we talked it over and it was what we agreed the answer would be.

Q. I hand you a carbon copy of a letter dated July 6, 1953, from Brooks Supply Company to U. S. Carton Forming Corporation and ask where this carbon copy came from.

1297 A. This came from our files wherein we keep a copy of that correspondence.

Q. Do you know whether this is an orignal carbon of that letter?

A. Yes, it is. There is no question about it.

1298 By Mr. McCanna: This original carbon of a letter has been marked in this case Plaintiff's Exhibit 102, and it has already been offered in evidence

By Mr. Kipnis: No objection.

By Mr. Voland: No objection.

By the Court: It may be received.

(Said document, so offered and received in evidence, was marked PLAINTIFF'S EXHIBIT NO. 102.)

By Mr. McCanna: (Reading.)

"Q. Did you ever make this deposit of $1,000 called for in this letter of July 1, 1953, from U. S. Carton Forming Corporation?

A. I believe the letter answers that. No, sir, we didn't.

Q. Did you ever fill this order which is marked Plaintiff's Exhibit 100?

A. No, sir.

Q. Will you tell us why?

A. Because the filler never was produced to our knowledge even to this date. The filler that was shown to us up there and on the price range in which it was stated
1299 they would deliver it and to this date we do not have any. We do not know of any filler they have, the U. S. Filler Company has as shown in this picture."

By Mr. Kipnis: If your Honor please, at this time I move to strike all of the testimony thus far and the rest of the deposition on the ground that it is irrelevant and immaterial. It relates to this Defendants' Exhibit 33, which was shown to Mr. Brooks in June of 1953, and as the witness just testified it was never manufactured, never produced. It was completely abandoned, I think, July 1 or July 2, 1953.

Therefore it has no relevancy at all to the issues in this case because the patent didn't issue until February 2, 1954. Anything that was done by way of experiments or by the way of an effort to produce another filler by Mr. Brasile prior to the date of the issuance of the patent in suit, which was subsequently abandoned, is clearly irrelevant and immaterial.

1300 We are going to spend a lot of time and the rest of the deposition deals only with that particular matter.

By Mr. McCanna: Well, your Honor, we have the testimony of Mr. Richardson very clearly showing in this case that the filler mechanism made according to his drawing, and showing the filler mechanism that was on this model, Defendants' Exhibit 33, and which was also shown in this photograph, Plaintiff's Exhibit 112, and there is also an earlier one, that filler mechanism was carried all the way through, and through his drawings up to this machine,

Plaintiff's Exhibit 40. There is a continuity of the filler invention which we say infringes this patent.

It is these connections that we are showing here plus our pleading in Count 3, in which we say, and which we are here showing, that Mr. Brasile and his companies, while under contract, wrongfully took the invention, the filler invention, and carried it through to the final accused machine.

1301 I think it is pertinent.

By Mr. Kipnis: If your Honor please, these witnesses will testify that the valve or filler mechanism, that Mr. McCanna referred to, was never used. It was not on the machine. The cartons were filled by being taken over to the tap. They were filled with tap water, then they were pushed through the machine just to show how this movement operates.

So this deposition is clearly irrelevant and immaterial to any issue in the case.

By the Court: Well, it may be, but I guess I will let it in.

By Mr. McCanna: As long as Mr. Kipnis brings it up, your Honor, we have the reports from the Ex-Cell-O Company, signed by Mr. Richardson, that this machine was actually used with this filler mechanism that is shown on it, and shown in great detail in this photograph, very great detail, showing that it was actually made and

1302 tested up there at Ex-Cell-O, going through all the filling operations, and that is the same construction that we have in the accused machine, Plaintiff's Exhibit 40.

By Mr. Kipnis: It is not the same structure, your Honor, but your Honor has ruled.

By Mr. McCanna: Essentially part for part the same.

By the Court: Well, I guess you had better put it in. Let it be received subject to the objection. How much more of this is there?

By Mr. McKnight: About eight pages.

By Mr. McCanna: Just two or three pages.

By Mr. Kipnis: The entire deposition is some 95 pages, your Honor.

By the Court: How much more of the deposition?

By Mr. McCanna: I have three pages, your Honor.

By Mr. Kipnis: The rest is cross.

By the Court: Very well.

1303 By Mr. McCanna: (Reading.)

"Q. Did you do anything further in connection with this order, Plaintiff's Exhibit 100, in attempting to complete that matter?

A. Yes, sir.

Q. Tell us what you did.

A. At a later date we were in Woodstock. We were not able to get a satisfactory answer as to what we could depend on on this filler.

Q. When you say 'we' you mean—

A. Mrs. Brooks, Mr. Allen and myself. We went to Detroit and talked to Mr. Hoffman.

Q. Who is Mr. Hoffman?

A. I believe he is vice-president of Ex-Cell-O. We asked him as to what the possibilties were going to be to get this machine.

We never did get any assurance from any source that Mr. Brasile could deliver the filler he asked us to sell. No proof from any source.

Q. Did you have any conversation in Detroit with Mr. Hoffman about Ex-Cell-O Company making these fillers for Mr. Brasile?

A. Yes, sir.

Q. Do you recall that conversation?

A. Mr. Hoffman—"

1304 By Mr. Kipnis: Just a minute. I object your Honor, on the ground that there is no showing that Mr. Hoffman is connected with any of the defendants.

By the Court: Sustained.

By Mr. McCanna: (Reading.)

"Q. Do you have any better recollection of your trip to Ex-Cell-O Company in Detroit?

A. I can tell you an instance that happened which would definitely establish it. This was at the meeting we had with Lewis. We had a meeting with Lewis and Maurey Brasile in Woodstock I believe about sixty days after this. It might not have been that long.

Q. After what?

A. After the sales meeting wherein they showed us the pilot model. We immediately went from this sales meeting to Mojonnier-Dawson and talked to Mr. Mojonnier and then went from there directly to Detroit, drove all night, and saw Mr. Hoffman the following day, so it would be two days after the meeting that we had with Lewis at Woodstock.

Q. In this meeting you had with Mr. Brasile and Mr. Lewis at Woodstock, you think it was about sixty—"

1305 I think that should have been six days, your Honor.

By Mr. McCanna: (Reading.)

"—after the June 10, 1953, sales meeting at Woodstock?

A. I would think so. That could be wrong.

Q. This Mr. Lewis you mentioned, are his initials A. A. Lewis?

A. I couldn't tell you. Do we have any records here?

Q. While this is being checked by Mrs. Brooks, what is your recollection of this meeting which you mentioned which you attended with Mr. Brasile and Mr. Lewis?

A. Mr. Brasile phoned and asked that we come up and meet Mr. Lewis who was, we understood, putting some money in the company, according to Mr. Brasile's telephone conversation.

Q. Did you know Mr. Brasile's voice on the telephone?

A. Yes, sir.

Q. What did he say?

A. Mr. Brasile asked that we come up and meet Mr. Lewis that was joining the organization. So we agreed we would come up on the day he requested.

1306 Q. Up where?

A. To the Woodstock office, the U. S. Filler office. We went up on that date and met him. Mr. Lewis asked questions as to what our intentions were, what we were doing, and what we expected to do, and after I had answered a few of these questions I told him we came up there to get answers, not to be answering him. I asked him when we were going to be able to get some fillers. I asked what the price was going to be and Mr. Lewis told us that he couldn't tell us anything, so that was what made us suspicious as to whether we could get these machines. It was then we decided or a little while after we decided to go to Detroit. I would say within 24 hours.

1307 Q. To see Ex-Cell-O?

A. Yes, and Mr. Hoffman.

Q. Was Mr. Brasile present at that meeting with Mr. Lewis?

A. Mr. Brasile introduced us to Mr. Lewis.

Q. Do you recall why Mr. Lewis was carrying on this conversation rather than Mr. Brasile?

A. I understood Mr. Lewis was putting in some money.

Q. Mr. Brooks, was there any conversation at that time and what do you recall of the conversation and who was speaking?

A. Mr. Brasile told us that Mr. Lewis was putting in money in the new organization and that there would be no trouble in them supplying us with the machines, the filler machines like he wanted us to sell for him, and at that time is was stated that Ex-Cell-O would build the machines for Mr. Brasile. Mr. Lewis couldn't confirm that. Mr. Lewis wouldn't confirm anything. He told us that he was there to ask us questions and when we couldn't get an answer from Mr. Lewis or anyone else as to when we could promise delivery on the machine we went to Detroit 1308 to find out."

By Mr. McCanna: At this point, your Honor, the witness asked the privilege of explaining his testimony regarding the making of down payments on orders for fillers, and I asked the witness who—

By Mr. Kipnis: I don't recall that the witness asked for the privilege. Mr. McCanna went into it, and I think it is irrelevant and immaterial.

By the Court: What difference does it make?

By Mr. McCanna: Well, I will skip that, your Honor. It isn't so important. There are just one or two more questions, on page 30:

"Q. Mr. Brooks, during this recess have you checked your company's records to locate the date or time you were in Detroit calling on Ex-Cell-O?

A. We were in Detroit on July 28."

By Mr. McCanna: That is all.

By Mr. Kipnis: Do you want to continue to read the cross?

By Mr. McCanna: No, I am not presenting the 1309 cross.

There was one further question:

"Q. What year?

A. 1953."

By Mr. McCanna: That is all.

By Mr. Kipnis: This is the cross-examination.

"Cross-Examination by Mr. Kipnis.

Q. You spoke about pre-forming Pure-Pak cartons, does your company lease an Ex-Cell-O machine?

A. Yes.

Q. When did you first lease one?

A. It was probably around—I would have to look up my records on that but I believe about February of 1953.

Q. After you made this contract with U. S. Filler Equipment, Inc.?

A. That's right.

Q. You spoke of selling carton fillers. What is a carton filler? Is it the machine shown in the circular, Plaintiff's Exhibit 99? Is that what you call a carton filler?

1310 A. Yes, sir.

Q. Is that the only type of carton fillers you have sold?

A. That is the only one we had sold up to about a year ago.

Q. When would that be?

A. May I look at our records?

Q. You began handling the automatic Mojonnier-Dawson filler sometime in 1954?

A. Yes.

Q. Prior to that had you sold any other model fillers manufactured by Mojonnier-Dawson besides this CP shown in Plaintiff's Exhibit 99?

A. No filler similar to this. We had bought other merchandise, other items from Mojonnier-Dawson. I think we bought some ice cream equipment, cutting machines, and we have done a lot of business with them on stirring rods and stuff like that."

By Mr. McCanna: What page is this?

By Mr. Kipnis: That was on page 31.

I am going over to page 33, the third question from the bottom:

"Q. Before you left Mojonnier-Dawson on that first visit did you ask Mr. Albert Mojonnier about this

1311 machine that later became Model CP?

A. We saw the machine.

Q. Saw it demonstrated?

A. It wasn't offered to us for sale.

Q. Did Mr. Mojonnier say anything about it?

A. No.

Q. He didn't discuss it at all?

A. No."

1312 By Mr. Kipnis: We were talking about some other machines, your Honor. We are going to skip that. I will go over to page 36, the third question from the top: By Mr. Kipnis: (Reading.)

"Q. Now, during the time you were selling these fillers under your arrangement with U. S. Filler Company, you sold primarily what models?

A. CP.
Q. And is the CP shown in this circular, Plaintiff's Exhibit 99?
A. Yes.
Q. How does this CP filler work? Do you take a carton that is already sealed up?
A. Yes.
Q. And what do you do?
A. It is sealed by wax.
Q. Sealed by wax?
A. Yes.
Q. What do you do, take it and put it under this to open it? How do you open it?
A. Let's see. You break it open here (indicating).
Q. You have a thing here that is not shown on the circular that breaks open the carton?
1313 A. No, it is right here.
Q. Can you mark it?
A. I think it is right here.
Q. We will extend a line on this and mark that 'x'. That is the mechanism that opens the top of the carton?
A. Yes.
Q. What type of cartons are these? Are these the gable type?
A. Yes, sir, they are the gable type.
Q. This filler that Mojonnier-Dawson was manufacturing and that you were buying from U. S. Filler Company during the period you operated under that contract was equipped to handle only gable type cartons?
A. Yes.
Q. Now, after you pick up the carton physically and open it up then you fill it from a can just above it?
A. That's right.
Q. And beneath the can you have a valve?
A. Yes.
Q. And right toward the bottom of the filler there is a switch button, isn't there?
A. Yes.
Q. When you push the carton against that switch
1314 button that opens the valve and fills the carton?
A. Yes.
Q. Where do you find a solenoid on the filler?
A. I can't tell you. I don't have anything to do with the installation and service work. The only thing I do is see the boys sell them.

Q. You couldn't tell the solenoid if you saw it?

A. No, I couldn't. I should know it but I haven't paid much attention. As I recall they had several different type openers on there and whether that is the present one they are using I don't know.

Q. I am concerned primarily with what you were selling at the time you were buying from the company when Mr. Brasile--

A. At the time we bought from Mr. Brasile I think they had a shoe hook but they don't use the shoe hook on this one.

Q. On this circular, Plaintiff's Exhibit 98, the shoe hook is not shown?

A. No.

Q. You can't point out the solenoid on this picture?

A. No.

Q. Is there a timer on this picture?

A. Yes.

1315 Q. Will you mark that "Y"?

A. Yes.

Q. So after the carton is filled then it is picked up by hand, and moved over to another station where the carton is heated again?

A. That's right.

Q. Isn't this a heater, this thing I am going to mark "A"? That is a heater, isn't it?

A. No.

Q. Where is the heater?

A. That is your V-block. This heater comes right in like that, about the size of your pencil there.

Q. Shall we put a circle around it and draw a line to "A"?

A. Yes.

Q. You put the carton through the V-block to drive a staple through it?

A. It goes in the V-block and clamps and the heater heats the V-block and the V-block seals it and then you come to the staple."

By Mr. McCanna: I interposed an objection, your Honor, that this line of examination dealing with the stapler mechanism, which is over on this machine, was entirely outside of the filler claims in issue here.

1316 By Mr. Kipnis: It is true it hasn't anything to do with the patent, but we were just discussing the machine and its operation.

By the Court: Go ahead. Overruled.

1317 By Mr. Kipnis: (Reading.)

"Q. After the carton is heated, then it goes to the stapling mechanism?

A. I have an old one out here we can look at it.

Q. Do you know whether it is stapled after?

A. No, I don't.

Q. Do you know what this mechanism is that is shown on the right and left sort of like pistons, shown on the right and left and hose coming through here?

A. That is your pressure.

Q. Air pressure?

A. Yes.

Q. Is this one of the staplers that utilizes pneumatic pressure to staple it?

A. I don't know.

Q. You don't understand the construction of the machine at all?

A. No.

Q. Do you remember whether the first ones you sold used a sort of pneumatic pressure stapling mechanism?

A. No.

Q. Did it use an ordinary foot treadle stapling machine?

1318 A. On the CP models I recall they had a foot pedal right here.

Q. Now, you started selling these machines about when, the CP machines?

A. Well, I think we sold the first one in November, 1952.

Q. Now, Mr. Brooks, this picture that was shown to you by Mr. McCanna and marked Plaintiff's Exhibit 113, does this truly and accurately show the machine as it was the first time you saw it in the garage in Woodstock?

A. To my knowledge, yes.

Q. And that was when, in May, 1953, was it?

A. Well, now, I can't tell you definitely the date. I would say it was 60, approximately 60 days prior to the time we were called to the sales meeting and that was in June.

Q. You were called to the sales meeting in June?

A. Yes, and I saw this in April, I think, March or April.

Q. Is there any way of fixing the date by reference to any documents?

A. I sure haven't because all those trips was made at that time to be sure our accounts were together.

1319 Q. For any other reason?

A. Well, of course, naturally there was such things as working out details on plates.

Q. For the cartons?

A. For the cartons, and the main purpose was to keep the account in order and at the same time we were up there we talked about other things too.

Q. Did you talk about servicing the machines?

A. Yes.

Q. You had quite a bit of trouble with servicing?

A. Yes, several service men were doing that.

Q. But at that time prior to May, 1953, or April, 1953, and during the year 1952 particularly you had a lot of trouble with servicing the machines?

A. Not in 1952.

Q. How about 1953?

A. Had quite a bit of trouble in 1953.

Q. One of the difficulties you had was the cartons leaked, isn't that right?

A. Of course, that is always true on any paper carton.

Q. I am speaking of these machines. One of the difficulties you had was after the staple was driven through

1320 it still leaked?

A. Yes.

Q. And you had a lot of complaints because you couldn't clean the valve, isn't that right?

A. I would like to modify that to a certain extent. Mississippi and Louisiana wouldn't approve of this CP machine.

Q. Why not?

A. The valve was one thing.

Q. You had trouble with the board of health of those states?

A. In fact, we can't sell this machine in Louisiana at the present time.

Q. And you called Mr. Brasile a good many times about that and tried to get it straightened out?

A. Most of the service work had been handled with Mr. Allen. My job has been more to promote sales and keep things rolling. It might be we ran into some difficulty and I would have the service man call Mr. Brasile or Mojonnier-Dawson direct and get them to answer the problems. I

am not a mechanic and I think I can use my services to better advantage other ways.

Q. Another difficulty you had was you couldn't
1321 put a brush through the valve because of the foam deflector?

A. I couldn't say.

Q. Condensation formed on the plate and water dropped in the carton?

A. That was a requirement made by the State of Mississippi that they would put a restriction shield running form here to here so all the work was done under a restriction shield.

Q. When you say from here to here, you mean from a point marked '1' to a point marked '2'?

A. I would say right where it comes out of the stapler.

Q. Now, in this pilot machine you saw in May or April of 1953, which Mr. Brasile showed you, Mr. Brasile demonstrated this so-called movement, do you remember that, that automatically moved the cartons from step to step after they were dropped in place?

A. Yes.

1322 Q. That was a feature that appealed to you quite a bit, isn't that right, because it required less handling of the cartons?

A. That could be a good feature.

Q. It was an important feature to you?

A. Yes.

Q. Do you remember when he demonstrated the operation of the machine shown in Plaintiff's Exhibit 113 he dropped cartons in between the fingers you see here?

A. I can't say that.

Q. And didn't he then, when he turned it on it automatically moved the carton along until they came to this sticking out like a finger above this for opening cartons? Isn't that what he did? Didn't the cartons move along over this shoehorn which opened the cartons as they were pulled along?

A. This was all being done by hand.

Q. What was being done by hand?

A. Pushing the cartons.

Q. Were the cartons dropped in the machine when you saw it in May of 1953?

A. I can't tell you.

Q. When you saw it in June, 1953, was the machine

1323 in the same condition then as shown on the photograph?

A. This, as I recall, is the machine we saw at the sales meeting.

Q. On June 10, 1953?

A. Yes.

Q. And this picture, Plaintiff's Exhibit 113, truly and correctly shows it?

A. Yes.

Q. That was a galvanized can?

A. Yes.

Q. Held by a couple of straps?

A. Yes.

Q. Was there anything in this when you saw it? There was no water or milk in the can, was there?

A. No.

Q. Didn't they take the cartons to a faucet and fill them with water? Do you remember them doing that?

A. No.

Q. You don't remember Mr. Brasile or somebody connected with him taking the cartons over to the faucet, turning the faucet on and filling the carton with water and bringing it back to the machine?

A. No, I sure don't.

Q. You have forgotten about that?

1324 A. I wouldn't say. I don't remember seeing that act performed. As I recall the cartons were put through dry.

Q. When the cartons were put through there wasn't a carton dropped in each space provided between those fingers you see here?

A. No, I don't think that is true.

Q. What was done?

A. The cartons were pushed from this side here and they were not placed by any finger.

By Mr. McCanna: The witness is using his finger starting from the left to the right.

A. As I recall you stated you fed the cartons in here, and as it moved along each carton pushed the one before it.

Q. Did the machine move along by motor? Was it driven by motor or pushed by hand?

A. I think it was moved by hand.

Q. Who pushed it by hand?

A. The carton as they put it in the machine in here. I may be absolutely wrong on this. I am trying to remember.

Q. Do you remember whether the carton was inserted in the machine on the left of the photograph?

1325 A. It was placed on the edge of the track starting in the machine and moved to the right.

Q. Was it moved to the right by a motor or by hand?

A. As I recall it was moved by hand.

Q. Who pushed the cartons through by hand?

A. The one putting the cartons on. As he would put one on it would push the next one.

Q. Who did that?

A. Maurey Brasile and Jack Richardson.

Q. Jack Richardson wasn't there when that demonstration was made.

A. He was called in before it was completed because they had trouble with the stapler.

Q. Before Jack was called in who put the cartons in by hand?

A. Maurey Brasile.

Q. Isn't it a fact, Mr. Brooks, that Maurey Brasile took three cartons and filled them with water, then brought them to the machine and showed you how they moved along and over to the stapler and stapled three of them when the shear pin broke?

A. I have no recollection of water being put in them.

Q. Do you remember the rest of it?

A. I remember the shear pin broke. I don't believe 1326 it was the shear pin. I remember they had trouble with the stapler and they called Jack Richardson to repair it and he tried to demonstrate it some more but couldn't get the stapler working correctly.

Q. Look at this picture again and show me where the solenoid was on the machine at the time you saw it on June 10.

A. I can't tell you.

Q. Is there a solenoid on the machine in the photograph?

A. I can't tell. I am not a service man. I don't know enough what the different parts are.

Q. Did you see a timer on the machine at the time and do you see one in this photograph?

A. I don't see any in the photograph.

Q. As a matter of fact there wasn't a timer on the machine when you saw it on June 10, 1953?

A. I can't definitely state.

Q. You didn't see the timer operate at that time, did you?

A. I don't recall of any timer being on the machine. Of course, there was some timers around the office at that time.

Q. I am now speaking about the machine.

1327 A. That was the reason they used it by hand.

Q. Isn't it a fact that Mr. Brasile demonstrated the stapler and closer mechanism to you? That was the thing he was trying to let you see where the improvement was.

A. Well, now, I can't tell you about that one statement there, but I can tell you something about the closing.

Q. What about the closing?

A. Because one of the machines we had out—I believe it was at Ardmore, Oklahoma, we were having trouble with that machine and Maurey Brasile said he would furnish us a new type opener and new type closer and he sent one down and it didn't work and on one of the trips up there, I think it was the sales meeting, we took it back up there and he was supposed to have another opener and closer made, but he didn't, and he promised he would have it the next day, and we came back the next day and he didn't have and Maurey Brasile wouldn't come to the office and talk to us.

1328 Q. At that sales meeting when they demonstrated the machine shown in the photograph, Plaintiff's Exhibit 113, one thing he demonstrated was the closing mechanism, wasn't it?

A. I don't recall he pointed that particularly. I think he was calling attention to the whole machine, the operation of the machine.

Q. What did he say about the operation of the machine?

A. He said it would be easier and faster than the old machine.

Q. In what way would it be easier and faster?

A. Easier to operate and more than likely cause less leakers.

Q. The leakers are caused by the failure of the closing mechanism?

A. Not necessarily.

Q. What caused the leakers?

A. So many things they tell me will cause leakers. Even if the carton is bent just a little bit or creased or

bruised it causes trouble. Of course, there are two ways, I understand, they try to keep from having leakers, 1329 by heating the wax and closing it with wax and staplers put in there and ordinary caution. Regardless of this machine or Ex-Cell-O machines you are going to have leakers. There is no machine we have found that has been perfect.

Q. What was there about this machine to interest you? Their price was well above the CP price.

A. One thing this was supposed to be a faster machine.

Q. Automatically filled?

A. Automatically filled.

Q. Wasn't this machine supposed to eliminate the manual operation of moving the cartons from here to the filling station?

A. Yes.

Q. And all a man had to do was drop the carton in place and it automatically opened and filled and sealed it?

A. By pushing the carton along.

Q. What was the thing that was of interest to you?

A. The speed they could get. In a CP you only get five or six a minute and there was a demand for a machine that will fill ten or more a minute."

By Mr. Kipnis: Unless you want me to read the 1330 rest of it, I was going to skip part of this.

By Mr. McCanna: It is all right with me. No, I am not stipulating.

By Mr. Kipnis: No, I just asked you if you wanted it read in.

By Mr. McCanna: I am not asking anything.

By Mr. Kipnis: O.K.

By Mr. McCanna: What page are we on?

By Mr. Kipnis: We will go over to page 53, the second question from the bottom.

"Q. After Jack Richardson came in the machine was no longer demonstrated?

A. That's right. I wouldn't say no longer demonstrated. He was trying to repair it and of course trying to put more cartons through. You might say that wasn't for demonstration.

Q. You saw him do that?

A. That's right.

Q. You never saw the machine after that?

A. Yes.

Q. You saw the machine again after June 10?

A. It was setting out in the shipping room. We backed our car up to the warehouse door and they had
1331 the machine there crating it.

Q. You saw them crating it?

A. They didn't have boards on it but had boards together and had a carton there and a fellow said they were getting it ready to go to Detroit."

By Mr. Kipnis: Now down to the last question on page 54.

"Q. How many cartons were run through it?

A. I don't want to say. It was a few cartons. I would say they might have got ten or fifteen or twenty-five, something like that. We didn't count the cartons.

Q. You go on and say in your affidavit:

'Said filler machine contained—' "

By Mr. McCanna: Just a minute. Is there any affidavit in evidence in this case?

By Mr. Kipnis: Yes. You produced an affidavit.

By Mr. McCanna: There is nothing in this case in the way of an affidavit that I know of. If your Honor please, there is no affidavit that has been introduced by this witness, nor did the opposing party nor did I introduce or offer any affidavit.

1332 By the Court: I can't tell. The question wasn't complete. I don't know what the question is.

By Mr. Kipnis: (Reading.)

"Q. You go on and say in your affidavit 'Said filler machine contained a tank.' That is true, it had a tank?

A. Yes.

Q. And a float—"

By Mr. McCanna: That is what I am objecting to.

By the Court: I don't see anything objectionable so far.

By Mr. Kipnis: (Reading.)

"Q. And a float. Where is the float?

A. Inside the tank.

Q. Did you see the float?

A. Yes.

Q. As a matter of fact it wasn't in there?

A. I can't tell you. I know the float was mentioned.

Q. You were told they would have to have a float?

A. Yes, they would have to have a float seemingly, but they had another tank there. I don't remember
1333 whether that was at this meeting or not.

Q. Let's stick to this meeting. You don't know whether there was a float there?

A. At one meeting up there I saw a float in a tank."

By Mr. Voland: If the Court please, we have a procedural problem about which I would like to consult defendants' counsel and perhaps with plaintiff's counsel.

I wonder if we could have a short recess at this point.

By the Court: We will take a short recess.

(Whereupon a short recess was taken.)

1334 By Mr. Kipnis: I refer to page 49.

By Mr. Clement: I don't have 49, Mr. Kipnis.

By Mr. Kipnis: All right. You don't need to refer to it. The third question, I asked Mr. Brooks:

By Mr. Kipnis: (Reading.)

"Q. Have you a copy of this affidavit you signed?"

By Mr. Kipnis: And at that time I handed Mr. Brooks the affidavit, a copy of which was furnished to us by Mr. McCanna before we went down there, for the purpose of seeing whether we couldn't stipulate that if called, he would testify as set forth in the affidavit.

I now ask that this affidavit be marked for identification as Defendants' Exhibit 40.

By Mr. McCanna: Your Honor, I object to this. This was not introduced in the taking of this deposition and the purpose for which he offered that affidavit or submitted it to Mr. Clement was in an attempt to stipulate some testimony or stipulate some facts, and along with that, I submitted a photograph of the machine which Mr.

1335 Clement had never seen before and if we had stipulated facts, we would have adjusted the facts according to a stipulation and certainly that is an entirely different matter from trying to bring this affidavit into evidence here in this trial.

By Mr. Clement: If the Court please, this affidavit was submitted to me for the purpose of possibly eliminating the necessity for taking this deposition. Now, there are a number of statements in this affidavit which are entirely contrary to what was adduced at the time of the deposition.

That is why they are relevant, so far as we are concerned.

By Mr. McCanna: That is correct, your Honor, and I submitted along with this affidavit, this photograph which Mr. Clement had never seen before and the facts that are in this photograph, I was going to adjust with him in our stipulation.

For that reason, I can't see where an effort made to stipulate some facts has any bearing on the use of an affidavit in this case.

1336 By Mr. Voland: Mr. McCanna, didn't you stipulate to the facts of the affidavit?

By Mr. McCanna: No, I didn't. I submit, these two matters—

By Mr. Voland: That the facts in the affidavit were correct?

By Mr. McCanna: We hadn't sat down to consider them. I was being very generous giving you this material, which you had never seen before and I was very hopeful at the time that we could avoid a trip down to Joplin and to West Monroe to take these depositions, that is the trip that Mr. McKnight had gone down on earlier.

By Mr. Kipnis: If your Honor please, the purpose of referring to the affidavit at this time is to lay the basis for the questions that followed. I examined the witness with respect to the statements made therein, and to show there was an inconsistency in the statements he made in the affidavit as compared to the testimony that he gave on direct examination and that is the only purpose for which I want to use it at this time.

1337 By the Court: Well, how was it the affidavit got into it?

By Mr. Kipnis: I showed it to the witness and asked him if he had a copy of it and I referred to various pages of it and asked him questions about it. It isn't marked as an exhibit, but there isn't any question about the facts.

By Mr. McCanna: There isn't anything of the kind.

By Mr. Kipnis: This is what I said:

"Have you a copy of this affidavit you signed? I notice on page 2 you say that in the month of May, 1953 U. S. Filler Equipment by Mr. Maurice J. Brasile requested a representative of Brooks Supply Company to attend a sales meeting."

By Mr. McCanna: That is the question, but he didn't answer anything in that respect.

By Mr. Kipnis: Just a minute. I didn't finish.

"Was that request made after you had seen the machine as shown in the photograph Plaintiff's Exhibit 113 or before?"

The answer:

1338 "We had seen—I wouldn't say—"

We go on examining him for a few pages about this affidavit, quoting from this affidavit, and asking him questions concerning it.

By Mr. McKnight: Why don't you read the whole thing: "I wouldn't say it was the exact copy of this" and so forth?

By Mr. Kipnis: (Reading.)

"I wouldn't say it was the exact copy of this but we had seen another machine similar to this at the garage there."

And then we go along. That is the photograph, your Honor, that he is talking about, and then we go on and ask him about this photograph and all these questions concerning statements he made in the affidavit. He is confronted with those and he is asked to explain it and we just show the inconsistency of his statements he made under oath when he made this affidavit and his statements on direct examination.

1339 By Mr. McCanna: At no place is the affidavit introduced in evidence or is it admitted.

By Mr. Kipnis: We won't introduce it now.

By Mr. McKnight: It isn't in this case.

By Mr. McCanna: I don't see how you can introduce an affidavit now after this deposition was taken and I, in good faith, submitted that affidavit with this photograph in the hopes—

By the Court: He isn't questioning your good faith. Nobody is questioning your good faith.

By Mr. Kipnis: Mr. McCanna was there. The witness had the affidavit in front of him. We all knew what we were talking about. There isn't any doubt about what we were discussing.

By the Court: You are endeavoring to lay a basis for impeachment, is that it?

By Mr. Kipnis: Yes, your Honor, showing inconsistent statements under oath.

By the Court: Well, I guess you have a right to endeavor to do that. Now then, when it comes to offer-

1340 ing the affidavit, that will be another thing.

By Mr. Kipnis: I will ask that the affidavit be marked Defendants' Exhibit 40 for identification.

(Thereupon said document was marked Defendants' Exhibit No. 40 for identification.)

By the Court: Are you undertaking to impeach him on a material matter?

By Mr. Kipnis: Well, your Honor, yes. His recollection is faulty with respect to this machine. He testified it had a timer and that it had a solenoid and so on, in the

affidavit. Now he admits it didn't have it at the time he saw it.

By Mr. McCanna: Those are the matters I was going to clear up in the stipulation if we had prepared it, your Honor. I submitted this material myself, voluntarily.

By Mr. Clement: Your Honor, this was not—

By Mr. McCanna: (Continuing.) Not for any impeachment.

By the Court: If inconsistent statements were
1341 made under oath by the witness and you have read what he said on his direct testimony and it is material, they have a right to show it.

By Mr. McCanna: It wasn't a statement under oath in this case or in any case.

By Mr. Kipnis: It was a statement under oath.

By the Court: Whether it was a statement in this case or in any case, it was a statement made under oath that he has undertaken to show. The objection is overruled.

By Mr. Kipnis: May we borrow your copy for a second? Turn to page 52. Turn to page 53, the fourth question from the top.

By Mr. Kipnis: (Reading.)

"Q. Now, to go on, in your affidavit you state at said sales meeting there were present Maurice J. Brasile, Jack Richardson, Carl Allen, yourself and seven salesmen. Jack Richardson was there only for a short time, isn't that right?

A. Jack wasn't there at the original start but he
1342 came in.

Q. When the machine broke down?

A. Yes.

Q. After Jack Richardson came in the machine no longer was demonstrated?

A. That's right. I wouldn't say no longer demonstrated. He was trying to repair it and of course trying to put more cartons through. You might say that wasn't for demonstration.

Q. You saw him do that?

A. That's right.

Q. You never saw the machine after that?

A. Yes.

Q. You saw the machine again after June 10?

A. It was setting out in the shipping room. We backed

our car up to the warehouse door and they had the machine there crating it."

By Mr. Kipnis: Turn to the top of page 55.

By Mr. Kipnis: (Reading.)

"Q. You go on and say in your affidavit 'Said filler machine contained a tank.' That is true, it had a tank?

A. Yes.

1343 Q. And a float. Where is the float?

A. Inside the tank.

Q. Did you see the float?

A. Yes."

By Mr. Kipnis: Going over to page 56.

By Mr. Kipnis: (Reading.)

"Q. You were speaking in your affidavit of the machine and you say it had a float. Now, you are not sure whether it had a float?

A. I am not going to say there was a float at that particular time.

Q. Then you were incorrect when you said it did have a float?

A. No, I am not.

Q. I am speaking about the machine demonstrated.

A. No, I saw a tank.

Q. Not at that time?

A. I can't remember whether it was exactly at that time or what time but they had a tank with an opening on the side with a float in there.

Q. The machine demonstrated to you didn't have a timer on it, did it?

A. They didn't use a timer because they didn't fill it with liquid.

1344 Q. This statement in your affidavit that the machine demonstrated had a timer on it is incorrect?

A. I don't believe it is incorrect because they had timers there. If I remember correctly they had a timer on the wall. It wasn't hooked up because they didn't put any liquid through the machine.

1345 Q. Your affidavit says:

'in addition to other parts said filler machine contained a tank, a float, a timer, and a solenoid.'

This is incorrect, isn't it?

A. I wouldn't say so at all.

Q. Where do you find the timer on the machine?

A. Of course, the timer is never on the machine.
Q. Where do you find it in connection with the machine?
A. It is always at the back on the wall.
Q. Where do you find the solenoid on Exhibit 113?
A. It shows you here where the timer is (indicating). The timer is not directly on this."

By Mr. McCanna: The witness is pointing to an Electronic timer on Plaintiff's Exhibit 113.

"Q. I am only trying to get the facts. We are talking about the machine you saw at the sales meeting in June of 1953. We are agreed, I believe, that it didn't have a timer, didn't use a timer at the time it was demonstrated?
A. According to my best recollection they had a timer on the wall. It wasn't hooked up to run because they were
1346 putting no liquid through it. They showed us a tank similar to this tank here (indicating) they were going to put on the filler.
Q. But the filler actually—
A. (Interrupting.) This tank was only a make-shift tank.
Q. And it didn't have a valve on it, did it?
A. I can't tell you whether it had a valve on it.
Q. It didn't have a solenoid on it, isn't that right? As a matter of fact, it didn't, did it?
A. According to the information that Maurie Brasile gave when he demonstrated the machine it was brought out it was going to have a solenoid valve.
Q. I am not talking about what he told you, I am asking if it had it.
A. Yes.
Q. You are sure of that?
A. Yes.
Q. Are you as sure of that as you are the rest of your testimony?
A. I think so.
Q. You said you wouldn't know a solenoid if you saw it
A. I am telling what he told me. As far as me pointing out the solenoid valve—it is an electrical attachment
1347 on the machine.
Q. On Plaintiff's Exhibit 113, what you say is a true and correct reproduction of the machine you saw at the June, 1953, meeting, please point out where the solenoid is?
A. I can't do it.
Q. Point out where the timer is.

A. The timer was on the wall behind it.
Q. There is no timer shown in the picture?
A. No.
Q. Point out the float.
A. If it was not in this tank it would be—
Q. In another one?
A. Yes.
Q. You are referring to a picture which you say is an artist's conception and when was this picture furnished to you, Plaintiff's Exhibit—" what is Exhibit "F"?
By Mr. McCanna: 112.

By Mr. Kipnis: (Reading.)
"Plaintiff's Exhibit 112?
A. After the sales meeting.
Q. It wasn't furnished to you at the sales meeting?
A. No.
1348 Q. In your affidavit you say that at said time and place Maurice J. Brasile did furnish photographs of said filler machine to said Brooks Supply Company. That's not correct, is it?
A. I believe that is correct. They had this drawing there, of course, and he was going to have more copies mailed to us.
Q. You are sure Mr. Brasile had the drawing, Plaintiff's Exhibit 112 with him at that meeting?
A. Yes.
Q. But he didn't give it to you then, did he?
A. He might have given—
Q. (Interrupting.) If you don't remember, say so.
A. I don't remember whether I brought one back or not. I know I tried to get one and if we did get one I don't know just who got it. Mr. Allen might have had one.
Q. Did you get one at that time?
A. I am not going to say I got it right that minute.
Q. You are not sure?
A. I am going to say we had it within a few hours after the sales meeting.
Q. How was it delivered to you?
A. We got some by parcel post.
1349 Q. A few hours after the sales meeting?
A. I would say the next day or two. How many we brought in with us from the sales meeting I am not going to say but I know we wanted enough to go around and we got some in by parcel post, and I believe we had

one or two come back with us. I am not going to say under oath, but Maurie Brasile had some of these and showed us the picture of how it was going to look at the sales meeting."

By Mr. Voland: May I interrupt? If the Court please, we have a witness who is planning to leave town on urgent business and I would like to know how Mr. McCanna would feel about our putting him on now, out of order. I don't know how much time it will take but I think we could conclude today, if we put him on out of order.

By Mr. McCanna: I think we could accommodate him on an out-of-town witness.

By Mr. Voland: The witness isn't an out-of-town witness. Let there be no mistake about that. The witness is leaving tomorrow on urgent business. It is Mr. Geiss.

By Mr. McCanna: Well, I would like to have more
1350 time, then, than we have today for the examination of Mr. Geiss. I would like to have an opportunity to talk to Mr. Geiss. We subpoenaed him as a witness. I would like to have an opportunity now to talk with Mr. Geiss if Mr. Geiss is here.

By Mr. Voland: He is here. You had him under subpoena too, did you not?

By Mr. McCanna: Yes. I didn't know he was going to be here today. I would like a chance to talk with him.

By Mr. Voland: We had him under subpoena for our case. We can put him on in the regular order. If we can't do it today, he should be instructed to return tomorrow.

By Mr. McCanna: Could I see Mr. Geiss?

By Mr. Voland: Surely. The gentleman is here, Mr. McCanna.

By Mr. Kipnis: Shall we proceed with this? Is it all right, your Honor? May we continue with the reading of the deposition, your Honor, or shall we wait?

By the Court: You better wait.

1351 By Mr. McCanna: If your Honor please, Mr. Geiss said he would return at 10:00 o'clock tomorrow morning as a witness.

By Mr. Voland: All right.

By the Court: Very well.

My Mr. McCanna: Mr. Kipnis, are you finished with my copy of the record?

By Mr. Clement: I put it there (indicating). Thank you.

By Mr. Kipnis: We stopped at page 60.

By Mr. McCanna: What page?

By Mr. Kipnis: We referred to the second answer on page 60. Now we are going over to page 61, the third question—the second question—I am sorry, the third question: By Mr. Kipnis: (Reading.)

"Q. Did it have the table on the right that is shown in this picture, Exhibit F, at the time you saw it?

A. No. It had this."

By Mr. Kipnis: Wait a minute. Are you reading in the right place? That is one, two—the third answer to the third question on page 61. It says "I can't tell you."

By Mr. Clement: I am sorry.

1352 (Reading):

"A. I can't tell you.

Q. That was drawn in by the artist?

A. I can't tell you about that.

Q. You don't remember?

A. I don't recall whether it had a table on it or not."

By Mr. Kipnis: Now going over to page 62, the last question on the page:

(Reading):

"Q. When did you make the last purchase from U. S. Filler Company of any of the Mojonnier-Dawson fillers?

A. As far as that is concerned, I don't recall the last one we got. There are several we had to cancel orders on because they couldn't deliver them. I can't tell you right offhand.

Q. When was your last order for a Mojonnier-Dawson filler through U. S. Filler Company, will you tell me that?

A. I can't from memory."

By Mr. Kipnis: Now on page 63, the sixth question from the top:

(Reading):

1353 "Q. Can you tell me when you made your first purchase of these models from U. S. Filler or anybody else?

A. I will have to get the records."

By Mr. Kipnis: The last question—the next to the last question:

(Reading):

"Q. Now, the machine that was demonstrated to you is the one shown in this photograph, Plaintiff's Exhibit 113?

A. Yes.

Q. And this picture actually shows the machine as you saw it at the time of the demonstration?

A. To the best of my memory.
Q. I realize it was sometime back.
A. Yes.
Q. That was almost a year ago, isn't it?
A. Yes.
Q. It is hard to remember all the details.
A. It was over a year ago.
Q. Almost two years ago?
A. Yes.
Q. After this demonstration did you go over to Mojonnier-Dawson Company in June of 1953?
1354 A. No."

* * * * *

"Q. When was the first time you talked to Mr. Mojonnier about the Mojonnier-Dawson filling machine?
A. It was at the time that Lewis was entered into the picture.
Q. That would be when, shortly after this machine was shown to you?
A. It was on the time we went to Detroit.
Q. That would be in July, 1953?
A. We went up there and met Lewis and didn't get any satisfaction.
Q. Then did you go to Mojonnier-Dawson?
A. Yes.
Q. Did you talk to Mr. Mojonnier?
A. Yes.
Q. Who was present at that meeting?
A. All I remember is we just went in for just a few minutes.
Q. Who went in?
A. Mr. Allen, myself, and I believe Mrs. Brooks went with me and our thought was wondering what we could do."

* * * * *

1355 "Q. That was sometime in July, 1953?
A. Yes.
Q. Was it before or after July 4, 1953?
A. It was after the sales meeting we had there in the office. The following day we came back to get this closure and the opener he had for this machine and he didn't have it and I had the girl in the office call Maurey and Maurey didn't come down. He wouldn't come down to talk to us. We tried to see Jack and he said, 'I have instructions not to give it to you.' We should get ahold of Gene Blum

and he talked to Maurey over the telephone and Gene told us Maurey was there but he didn't come down. He said he didn't know why he was acting like that.

"By Mr. McCanna: I don't understand when that was. I think there is some confusion.

"A. This is the day following the meeting with Lewis in July."

By Mr. Kipnis: At the bottom of page 67:

(Reading):

"Q. When did you place your first order with Mojonnier-Dawson?

A. I can't tell you that.

1356 Q. Where did you make your arrangements with Majonnier-Dawson Company to handle their machines? Where did you do it, in Chicago or by mail or how did you do it?

A. I can't even tell you that.

Q. You did make arrangements to handle them?

A. Yes. I would think it was done over the telephone. I am not positive of that but I would think it was probably the way it was done."

* * * * *

"Q. That was after the sales meeting. I mean after the meeting with Lewis.

A. After July, 1953."

By Mr. McCanna: Where is that question, please?

By Mr. Kipnis: I am sorry. That was an answer that I read.

By Mr. McCanna: But I mean, what page?

By Mr. Kipnis: Page 68, the fourth one from the bottom.

Now, page 69, the third question:

By Mr. Kipnis: (Reading.)

"Q. Did you hear about the patent lawsuit later?

A. Yes, I have heard that but the direction that

1357 came from I can't tell you.

Q. You don't know who told you about that?

A. I would like to stress one point. Our main thought was we wanted fillers and that was the only thing we were interested in. We weren't interested in anything between Maurie Brasile and Albert Mojonnier. The only thing we wanted was fillers."

By Mr. Kipnis: Now over to page 72, the second question from the top:

By Mr. Kipnis: (Reading.)

"Q. Mr. Brooks, do you remember signing an affidavit for use in a suit entitled U. S. Preforming Corporation *vs.* Mojonnier-Dawson Corporation, No. 52"—

By Mr. Kipnis: That's what it says. The correct title is 53 S, the correct title, 12115, in the Superior Court of Cook County.

By Mr. McCanna: I don't know whether that is the correct title.

By Mr. Kipnis: Here it is right here in the affidavit.

By Mr. McCanna: But there is no proof of the affidavit.

By Mr. Kipnis: Are you going to question that title or do you want to admit it?

1358 By Mr. McCanna: I don't know, but I have heard of several suits over there.

By the Court: Well, go ahead.

By Mr. Kipnis: What was the answer?

By Mr. Kipnis: (Reading.)

"A. I signed an affidavit.

Q. Who asked you to sign it?

A. Mr. Mojonnier came down and Mrs. Mojonnier and wanted to look at our records on sales of machines. We just piled our records on the table and let them look at them, like I told you I had when you were here before, and they looked at the records and then asked me if I would make an affidavit on the case, which I told them I would be glad to tell the truth to the best of my recollection but times and dates was pretty hard to remember and we would have to go through a lot of records to get them.

Q. When was that, do you remember?

A. I sure don't. I guess the affidavit would be dated there.

Q. The affidavit is dated June 11, 1954.

By Mr. McCanna: I can tell you when it was, it was about the middle of May, 1954.

Q. I want to get one thing clear, Mr. Brooks, you
1359 cannot give me the exact date when you first told someone representing Mojonnier-Dawson about this demonstration in June of 1953?

A. No."

By Mr. Kipnis: Now, going over to page 77, the third question from the bottom:

By Mr. Kipnis: (Reading.)

"Q. You now are a jobber for Mojonnier-Dawson Company?

A. Yes.

Q. Did you enter into an agreement with them in writing?

A. No, sir.

Q. No agreement in writing?

A. No, sir.

Q. You order machines and they ship them to you?

A. That's right.

Q. Have you some exclusive territory assigned to you?

A. We have a protective territory but I don't know whether it is exclusive or not.

Q. What do you have? Tell me what you have.

A. Well, we were supposed to have protection in Tennessee, but we didn't receive it.

Q. You were supposed to have protection in Ten-
1360 nessee by whom?

A. Mojonnier-Dawson said they would sell us the only fillers to go in Tennessee but they did sell to others.

Q. How about Missouri?

A. I don't know of anyone else that has sold Mojonnier-Dawson in Missouri.

Q. Have you any agreement concerning the territory you are to serve?

A. We have an agreement with Mojonnier-Dawson we will work nine states.

Q. The states you mentioned before?

A. Yes, and in those states we will sell fillers to the best of our ability and Mojonnier-Dawson will ship to us in that territory.

Q. They will not sell to anybody else?

A. That is the way we understood it but evidently it is not because it is not being carried out."

By Mr. Kipnis: Then we go over to the bottom of page 81:

By Mr. Kipnis: (Reading.)

"Q. Now, when you had this meeting with Mr. Brasile in June of 1953, I believe you testified Mr. Brasile told you he wasn't satisfied with the Mojonnier-Dawson
1361 machine and was going to replace it with some other machine, is that your testimony?

A. Well—

Q. What did Mr. Brasile say to you about the Mojonnier-Dawson machine at that time, in June, 1953?

A. He said he was going to build a better filler.

Q. Were you interested in getting a better filler?

A. We are always interested in getting a better anything.

Q. There must have been some good reason for taking ten men up there. Why did you go up there when you had a filling machine to sell?

A. He was supposed to have an automatic machine.

Q. And the one you were selling was not automatic?

A. That's right."

By Mr. Kipnis: Going to the second question from the bottom on page 91:

By Mr. Kipnis: (Reading.)

"Q. Mr. Brooks, when you saw the demonstration they didn't fill anything from the filler?

A. No.

Q. It had no milk in it?

A. No.

Q. Had no filling mechanism?

1362 A. That's right.

Q. Now, in this machine shown in Plaintiff's Exhibit 113, Mr. Brasile told you at that time it was designed so that the operator could take a carton, break it open, stick it on the machine and it would automatically go through and fill the carton and seal it?

A. That is the thought.

1363 "Q. You showed a keen interest in their machine, didn't you, at the time?

A. Yes.

Q. And this machine shown in this photograph, Plaintiff's Exhibit 113, as explained to you by Mr. Brasile in June of 1953 was an improvement over the Mojonnier-Dawson machine, wasn't it?"

• • • • •

"A. I wouldn't want to go that far. We never saw it operate. We will say the thought was an advance.

Q. As a matter of fact, you had been talking to Mr. Brasile and urged him to improve the Mojonnier-Dawson machine?

A. We wanted a faster machine and wanted more machines.

Q. You kept urging him to go ahead and improve the Mojonnier-Dawson machine?

A. And wanted an automatic machine.

Q. And you urged Mr. Brasile to develop one? You kept asking him to get you one?

A. We kept wanting a machine. I don't know whether I urged Maurey to do that. We wanted a faster machine and more machines.

Q. And that order you sent to U. S. Filler Equip-
1364 ment Company on June 26, 1953, was never filled, was it?

A. No, sir.

Q. And you never saw an actual machine like the one shown in Plaintiff's Exhibit 112?

A. No."

* * * * *

"Q. Mr. Brooks, if you will look at your record you have before you, can you tell from that when you made your last purchase of a Mojonnier-Dawson filler from U. S. Filler, Inc.?

A. June 10, 1953.

Q. And this check which is marked Defendants' Exhibit 7 for identification is the check you issued in payment of that filler?

A. Yes."

By Mr. Kipnis: I will ask that the check there referred to as Defendants' Exhibit 7 be marked Defendants' Exhibit 41 for identification.

(Thereupon said document was marked Defendants' Exhibit No. 41 for identification.)

1365 (Reading.):

"Q. Subsequent to that date you didn't buy any fillers from Mr. Brasile and his company?

A. That is correct according to our records.

Q. Have you examined your records also to ascertain when you made the first purchase of a Mojonnier-Dawson filler from Mojonnier-Dawson Company?

A. About thirty days later.

Q. And you have a check here—

A. (Interrupting.) The date is July 3, 1953.

Q. That is the first machine you bought from Mojonnier-Dawson Company?

A. Yes.

Q. You made the first purchase from Mojonnier-Dawson on a Mojonnier-Dawson machine on July 3, 1953?

A. Yes.

Q. What models were those, all CP models?

A. All CP models.

Q. And you have continued to buy Mojonnier-Dawson machines from Mojonnier-Dawson Company up to the present date, is that right?

A. These checks will give you a fair example of the two charges. That is why I said there wasn't
1366 much difference, but it will give you an idea.

Q. Didn't Mojonnier-Dawson Company reduce the price to you? They reduced the price later?

A. Yes, later.

Q. They reduced the charges for a CP machine—Mojonnier-Dawson reduced it to $1211.20 per machine?

A. That must have been—

Q. (Interrupting) They did reduce the charges to that amount, is that correct?

A. Yes, that's right.

Q. And they have continued to charge you that amount right along up to the present time?

A. Yes, that's right."

By Mr. Kipnis: That's all.

By the Court: Are you through?

By Mr. Kipnis: That's all.

By the Court: 10:15 tomorrow morning, gentlemen.

By the Marshal: This Honorable Court now stands adjourned until 10:00 o'clock tomorrow morning.

(Thereupon at 4:30 o'clock p. m., Tuesday May
1367 31, 1955, an adjournment was taken in the above-entitled cause until 10:15 o'clock a. m., Wednesday June 1, 1955.)

* * * * *

1369 And thereupon the following further proceedings were had herein:—

By the Clerk: Case on trial.

By the Court: Proceed.

By Mr. McCanna: Good morning, your Honor. I thought that the defendants had called a witness to be here at 10:00 o'clock this morning, but I don't see him.

By Mr. Clement: He is here. We would like to call him at this time.

And Thereupon the Defendants to Maintain the Issues on Their Behalf Introduced the Following Evidence, to Wit:

ALBERT E. GEISS, called as a witness on behalf of the Defendants herein, having been first duly sworn, was examined and testified as follows:

Direct Examination by Mr. Clement.

Q. Would you state you full name, please?
A. Albert E. Geiss.
Q. Where do you live, Mr. Geiss?
1370 A. 411 North Edgewood Avenue, LaGrange Park, Illinois.
By the Court: What is your first name, sir?
By the Witness: Albert. Albert Edward Geiss.
By the Court: Very well.

By Mr. Clement:

Q. By whom are you employed, Mr. Geiss?
A. By the Bowman Dairy Company of Chicago.
Q. And what is your position there?
A. I am production manager.
Q. What is the nature of your duties?
A. I supervise the processing, receiving, bottling of fluid milk products, ice cream, and so on.
Q. Are you acquainted with the Mojonnier-Dawson Company, the plaintiff in this case?
A. Yes, I am.
Q. How long have you been acquainted with the company?
A. Since the early part of 1948.
Q. What was the nature of your first contact with the company?
A. We were interested in 1947 in the development
1371 of a special type of container for processing or the dispensing of whipped cream. This special container required a special type of filler.

We had a filler that was originally built by the Mojonnier Brothers Company, with whom I believe Mr. Mojonnier was at one time associated, and knowing that he had something to do with the development of that earlier filler and further having heard that he was in business for himself

in another company, we contacted him to see whether he could build a similar type of filler to suit our purpose—not necessarily to build a similar type of filler, but to see what he could do to help us design a filler for this special purpose that we had in mind.

Q. Did you get in touch with Mr. Mojonnier regarding this problem?

A. Yes, we did. I believe I talked to Mr. Mojonnier either in January or February of 1948.

Q. Did you have any correspondence with Mr. Mojonnier regarding this proposed filler?

A. There was very little correspondence as I recall. We have none on record. We have looked for it. But
1372 I specifically recall that there was very little if any because we had nothing at that stage to write about. We were discussing the development of a piece of equipment.

By Mr. Clement: I have asked Mr. McCanna to produce a document. Do you have it, Mr. McCanna?

By Mr. McCanna: Here it is.

By Mr. Clement: This purports to be a letter from the Bowman Dairy Company to Mr. Albert Mojonnier.

1373 By Mr. Clement:

Q. I hand that letter to you, Mr. Geiss, and ask you if you recall signing that letter and if that is your signature on that letter.

A. Yes, that is my signature.

Q. Was that letter sent on or about the date which it bears?

A. Yes. It evidently was sent on the 9th of March. At least, it was written on that date.

Q. This letter contains a sentence:

"Enclosed is an order for two tables to be used in the whipped cream filling operation with which you are familiar. We would like the filler recently ordered mounted on the larger of the two tables," and so on.

Is that referring to the filler you referred to a moment ago as the one which you were getting from Mojonnier-Dawson Company?

A. That is correct.

Q. And what is the date of this letter, Mr. Geiss?

A. March 9, 1948.

Q. Do you recall the approximate date upon which this

filler would have been ordered from the Mojonnier-
1374 Dawson Company?

A. We had a copy of that order about two months ago and for some reason or somehow or other it has been misplaced. So because we had the order so recently it is fresh in my mind. The date of the order was March 1st, 1948.

Q. March 1, 1948?

A. March 1, 1948.

By Mr. Clement: I will ask the reporter to mark this letter of March 9, 1948 as Defendants' Exhibit 42 for identification.

(Thereupon said document was marked Defendant's Exhibit No. 42 for identification.)

By Mr. Clement:

Q. Mr. Geiss, you mentioned the order. Did you send that order?

A. It was sent through regular channels from the Bowman Dairy Company. I signed the order.

Q. Was the nature of the order one that was commonly used in your business, as far as the form of the order was concerned?

A. That is correct.

Q. You had a regular order blank, did you?

1375 A. That is correct.

Q. What occurred after the sending of the order to the Mojonnier-Dawson Company on the writing of this letter of March 9 in connection with the purchase of this filler?

Do you recall when the filler was delivered to the Bowman Dairy Company, or was it delivered?

A. Yes, it was delivered. The precise date I am not exactly certain of. It was sometime in April of 1948, I believe.

Q. Was it on or about the middle of April?

A. The date April 14th or 15th is in my mind, but I am not positive of it.

Q. What was done with this filler upon its delivery to the Bowman Dairy Company?

A. The filler was ordered for the special containers to which I have previously referred, and we were not ready at that time to go into production because the can and the component parts had not yet been completed and fully developed.

So we ran some experiments to test the filling accuracy of the filler for the first, during the first two or three days after delivery of the filler.

We also intended to use it and did, I would
1376 say within a week or ten days after the filler was delivered, we began using it for filling another type of container which we were marketing at that time.

Q. When you mentioned the first type of container, were you talking about the so-called Quick Whip can?

A. That is correct.

Q. What was the nature of that can?

A. The Quick Whip can is a one trip tin container with a special valve attached to it so that after filling with a certain amount of cream, the container may be charged with a certain pressure with nitrous oxide gas. In actual use the gas acts as a propellent to get the cream from the can and tends to fluff up or impart an overrun to the cream.

1377 Q. Was that Quick Whip can for retail use?

A. Not necessarily. The economics at that time indicated retail use, however, because of the alterable—I mean, because of the single trip feature of the can.

Q. You mentioned, I think, a second type of container. What was the designation or description of that container?

A. That was the so-called M-100 unit designed by the Aerated Products Company. It was a stainless steel container which was used in connection with nitrous oxide gas. The container was charged and its use was specifically to restaurants and drug stores.

Q. Were you selling the Quick Whip cans at that time when you purchased the filler?

A. No, we were not.

Q. Were you selling or did you have any commercial use of the M-100 containers at that time?

A. Yes, we had, for quite some time.

Q. How had you been filling the M-100's prior to the purchase of this filler, if you recall?

A. Well, there is a history to that. It goes
1378 back some several years, but the M-100 container at that time was being filled by hand, that is, filling a measuring cup with a given quantity and then pouring the contents from the measuring cup into the M-100 container.

Q. And when did you start using this filler which was purchased from the Mojonnier-Dawson Company to fill the M-100 containers, approximately?

A. I can't remember exactly, but we began use about a week or ten days after delivery of the filler.

Q. That would put it in the latter part of April, 1948, is that correct?

A. That is correct.

Q. Do you recall how much you paid for this filling machine of the Mojonnier-Dawson Company?

A. I believe it was $385.00.

Q. When did you pay for this machine, if you recall?

A. I don't recall, but we do have a voucher on file which I did not bring with me today, showing the exact date of payment. I believe it was in the latter part of April, the early part of May.

1379 Q. Was it paid for in the regular course of business?

A. That is right.

Q. Wsa it necessary to adjust the timing mechanism with the type of use you were going to make of this filler, if you recall?

A. Would you repeat that?

Q. Yes. This mechanism, I believe you recall, has a timing mechanism on it. Do you recall that?

A. Yes, I do.

Q. And you were using whipping cream in the filler, initially, is that correct?

A. That is right.

Q. And you had had no experience with this type of machine prior to that time?

A. No.

Q. Now, do you recall whether it had been necessary or was it necessary at that time to determine how the timer should be adjusted to make the proper dispensing of the whipping cream?

A. It was necessary to adjust the timing device, depending upon the amount of product that was necessary to fill into the container.

If you are referring more specifically to problems 1380 we had, it was necessary all during the early stages of the work of the filler, to continually adjust it. It wasn't working entirely properly.

1381 But what I am referring to now is I guess we would call it calibration of the machine to the use you were making of it.

A. Yes, it was necessary to calibrate the filler, that's right, calibrate—

Q. That was the so-called experimental problem?

A. That is right.

Q. That would be the case with this machine in using it with any product, would it not, any liquid?

A. Yes, that is correct.

Q. Mr. Geiss, did you see this machine prior to its delivery to the Bowman Dairy Company?

A. It was customary for us to inspect the equipment before it was shipped from the manufacturer. I don't specifically recall whether we inspected the equipment before we permitted the shipment.

Q. Was there any testing of this equipment or model of this equipment prior to the delivery of the actual machine purchased by you or any of your representatives?

A. Before giving a purchase order for the equipment, I visited Mojonnier-Dawson Company's plant and—

Q. What time? Do you recall when this was?

A. It was in February.

1382 Q. In 1948?

A. 1948, that's right. Mr. Mojonnier had a device similar in general features to the filler that we purchased.

Q. Was there any testing done on that machine?

A. We used—yes, we ran some tests on the machine with water and with cream.

Q. In the Mojonnier-Dawson plant?

A. That is right.

Q. Who was present?

A. We made two or three visits to the plant and in the course of the three visits there were two other members that I can recall, of the Bowman Dairy, present. One is Mr. Owen Paddock and another was Mr. Ernest Stark, both employed by Bowman.

Q. Did you actually fill containers at that time of those visits?

A. We weren't—yes, we did fill containers for the purposes of testing the accuracy of the fill.

Q. Do you recall any additional correspondence concerning this device prior to its delivery, Mr. Geiss, either a letter from you or a letter from Mr. Mojonnier to you?

A. I recall a sketch. I am not certain—I believe

1383 a letter accompanied the sketch. It might have been a handwritten note on the sketch that was sent to me, showing dimensions and general design of the filler that was to be supplied.

Q. Mr. Geiss, I hand you a group of sketches which

have been introduced as Plaintiff's Exhibit 35 and ask you if you have seen these previously, if you recall. Would you please tell me what the title of the group of sketches is on the first page?

A. "The Special Filler for Bowman Dairy Company Promised by April."

Q. It is almost illegible, I think.

A. April—yes, it is, April, 1948, April 1st, it looks like, or April 9, 1948.

This first sketch looks familiar. I can't recall where I have seen it before, but it does look familiar. I may have seen these sketches, but I am not positive.

Q. Do these sketches represent the machine that was purchased by the Bowman Dairy Company?

A. In essence, yes, they are the same; they represent the filler.

Q. You do not recall receiving any communication from Mr. Mojonnier in the form of a letter relative to this
1384 machine?

A. I stated that I had received a sketch and I am not certain whether—I am not positive that there was a letter of attachment. If there was not, there—

Q. There is none in your file, I take it?

A. That is correct, nothing in our files.

1385 Q. Were there any sketches delivered to you before you placed the order, if you recall?

A. I believe at the time the order was placed, Mr. Mojonnier discussed with me certain basic ideas that he had regarding the construction of the filler and I recall that there was some penciled sketches made at his plant to represent, oh, the possible size and so on, of the filler. The reason for that would have been, as I recall, we were concerned about the space requirements of the filler. We were concerned about the height that the filler would be mounted above the floor, and so on.

Q. Mr. Geiss, I hand you a photograph marked Plaintiff's Exhibit 36 and ask you if you can identify the machine in that photograph.

A. This looks very similar to the machine that was delivered to us in April of 1948.

Q. You do not know if it is the same machine?

A. No, I couldn't say that it is. It could very well be the same machine.

Q. Are there any differences apparent from this photo-

graph, from this machine shown in the photograph,
1386 from that which was delivered to the Bowman Dairy Company?

A. No, no, no differences in appearance at all.

Q. Is the machine which you purchased from the Mojonnier-Dawson Company still in use by the Bowman Dairy Company?

A. Yes, it is.

Q. Has it been substantially altered in any way?

A. No, not at all, as I recall.

By Mr. Clement: That is all.

1387 *Cross-Examination by Mr. McCanna.*

Q. Mr. Geiss, you stated, I believe, that you knew Mr. Albert Mojonnier prior to this filler machine you have just been telling about, prior to your placing that order?

A. I did not know him personally, but I knew of him by reputation since we had been dealing with the company, Mojonnier Brothers, by whom he was originally employed.

Q. Now you mentioned something about a filling machine that you contemplated using in this whipped cream filler line. I will ask you whether you know anything about this photograph which I am handing you, marked Plaintiff's Exhibit 13.

A. That is a picture of a filler which I believe was built by Mojonnier Brothers for a person by the name of Thoms.

Q. How do you spell that name?

A. T-h-o-m-s. Mr. Thoms had sometime prior to the period that I became involved in this development project, that would be prior to 1947, had attempted to develop a process for filling tin cans with whipped cream and charging them with gas.

1388 This equipment was to be used for that purpose and I don't believe—it is hearsay on my part, as far as I am concerned—I don't believe that this machine was ever actually put into use.

Q. Did Bowman Dairy Company buy one of these machines?

A. No, we didn't buy one. We had been interested, as I explained earlier, in the potential of the single trip whipped cream container for several years. We had recognized its potential and had been in touch with Mr. Thoms.

This I learned from officials of the company. I had nothing directly to do with Mr. Thoms.

An agreement was reached between Bowman people and Mr. Thoms to store this filler at one of our bottling plants during the years 1944, '45 and '46 as we felt, that is the Bowman Company felt that it might possibly have an application after the war was over and commercial tin plate and tin cans were again available.

Q. You are now talking about the machine shown on the photograph, Plaintiff's Exhibit 13?

A. That is right.

Q. When you were on this development project for the whipped cream containers, did you consider using this equipment or this machine shown on Plaintiff's Ex-
1389 hibit 13?

A. We considered using it, but there were certain features of it, both in its basic design and in its production speed, which did not lend itself to our type of operation.

Q. Could you tell us more about that? Why didn't it lend itself?

A. As I recall, this filler was designed to run at a speed of approximately 60 containers per minute, both filling and charging. We did not doubt that the filler would fill cream into the containers at that speed since we had at that time Mojonnier-type fillers in our bottling plants. But the charging mechanism which was a part of this filler did not lend itself to charging the containers with the proper amount of gas, so we felt that the filler was over sized and would not do the job.

1390 Q. On what principle did this filler operate, shown in Plaintiff's Exhibit 13?

A. It worked on a vacuum principle. It was necessary with this type of dispenser to fill the container only partly full, perhaps half full, and because of that it was not possible to take advantage of the volume of the container and fill directly to the top. It was necessary to have a special design to accomplish this half filling, which was accomplished by use of a tube which dropped into the can, and as the vacuum was pulled in the filler bowl the product was pulled into the can and then back out through the siphon tube, and as the can left the filling head a certain amount of cream was left in the can.

Q. Now will you tell us more in detail the nature of this development which you mentioned here in connection with filling the whipped cream into containers? What

kind of a project was that at Bowman's and what were you trying to do?

A. In 1947 the Crown Can Company brought to us a rather inexpensive tin container which had the capacity for containing high gas pressures. That container then represented the first basic step toward the develop-
1391 ment of a practical single trip container, since to properly and efficiently pack cream and gas together in combination to produce this so-called aerated cream, it was necessary to have a container which would hold pressures of 75 to 100 pounds.

When we received that container we discussed with some other individuals who were attempting to manufacture valves which could be used with this container, discussed with those people the possibility of procuring valves. We also undertook a valve development project ourselves.

We could see that as things progressed we could market this container within a relatively short period of time if we could find filling and capping and gassing equipment to do so.

The Mojonnier filler, the Thoms filler that we have just been talking about, was not acceptable for the reason that I have just explained: That it would not put enough gas into the can after capping and filling with cream. So we had to look for other equipment to fill the container with cream, to put a valve on the container itself, and swedge it or clinch it in place, and also a piece of equipment
1392 was necessary to put gas into the can.

We had all three of those things to find. I had talked to Mojonnier Brothers earlier about the possibilities of construction of a simple filler. There were other types of small hand fillers which were on the market, but they were not suitable for this purpose for sanitary reasons.

I made a trip to Buffalo, New York, to visit a company which had a small hand operated filler, but that was not acceptable.

This was a problem because of the need to fill the container half full. There were lots of fillers on the market that would fill the container with cream right to the top, and in the course of my search I learned from Mojonnier Brothers that Al Mojonnier had played a big part in the development of this Thoms filler. Learning that Al Mojonnier had started his own company, I contacted him.

1393 Q. Now, Mr. Geiss, I would like to have you explain this: Was this the first venture of the Bowman Dairy Company into a project of this kind? I mean the commercial filling of whipped cream or whipping cream into containers.

A. No, indeed. We had been filling whipping cream into stainless steel returnable type containers for many years. Those containers were for restaurant and drug store use.

Q. And that was the hand filling where you had a measuring cup or something and filled the cream into the containers by hand?

A. That is right. As an earlier phase of that project, however, we did have a mechanical hand operated filler, which to me is hearsay. I never did see the filler. It was in service for perhaps six months or a year, and it filled the cream into these stainless steel containers. But it was so unsanitary and so unsatisfactory that we abandoned that particular filler.

Q. Now, will you please tell us more in detail the scope of the equipment that you were planning to use on this project? I mean as to size and number of people that would be involved in operating it and the capacity

1394 of it.

A. Well, as with any new development project, our primary interest was to get into a pilot operation, so to speak, at the lowest possible cost to determine the practicability of that product from an economic viewpoint and from a production viewpoint.

For that reason we were interested in equipment that would be semi-automatic and would fill at 10, 15, 20 cans per minute.

I might add that the limiting factor all the way through in the development of this equipment was the time required to charge the cans with gas, and since a certain amount of time was required it necessarily limited the number of cans that we needed to have filled with cream at any one time.

Equipment that we had designed in our own shop indicated that we could charge with gas about 15 cans a minute, so we needed a filler that was no faster than that. At least, at this stage in our project.

Q. Did you personally plan this project or lay it out?

A. That is right. This entire project was under my direct supervision.

1395 Q. And the plan as you contemplated it when it would be finished and in commercial operation would involve the attendance of how many operators, for example?

I mean, when you planned this, what did you contemplate in the way of operators for running this equipment?

A. Aproximately five for the total operation.

Q. And so far as you were concerned and the Bowman Company was concerned, this was entirely a test project that you planned?

A. It was a test project, as I have explained, to the extent that we had a product. We thought we had a package. We wanted to produce that package and distribute it on a limited basis for purposes of market testing and package testing and product testing.

We do that with all new products, so it was an experiment as all of our development work is conducted in the early stages as an experiment.

1396 Q. And at the time this was planned, do I understand your testimony that you did not know of a satisfactory filler to go into the production line?

A. I think that is a fair statement on the basis that we ordered this filler, that we placed an order for this equipment. Nothing else was as satisfactory. Other means could have been used, but they would have involved high costs. We could have filled by hand, as we were doing our stainless steel containers.

Q. You mean by putting a group of operators ahead of the machine?

A. That is right.

Q. They could have filled the cream and then the containers could have gone into the line?

A. That could have been done.

Q. Yes. Now you told about getting in contact with Mr. Albert Mojonnier, and that was in your search for a satisfactory filler, is that correct?

A. That is right.

Q. Now you have told about going over to the Mojonnier plant early in 1948. I would like to have you tell us what you recall of what you actually did over there

1397 when you first went there?

A. We had made arrangements to have this meeting as a result of a telephone conversation, during which Al Mojonnier expressed the thought that he might have a piece of equipment which would fill our requirements. He

said he had been working on the development of a type of filler.

So I visited the plant, and in the plant he had a piece of equipment sitting on a work bench, as I recall, which he filled with water and demonstrated the principle on which the filler would work.

Q. Can you tell us how he demonstrated? Do you recall that?

A. Well, I recall the equipment fairly well. It was a tin can. It was a container or tin can with a solenoid mounted on the top edge and a filling spout mounted directly under it, in the bottom of the tin can, and a rod moving through the solenoid down to the filling valve.

That was all there was to the equipment aside from a timer that actuated the solenoid.

Q. Do you recall anything about how the demon-
1398 stration or test was actually made? I mean what do you remember about that.

A. Well, as Mr. Mojonnier explained the principle on which the filler would work, we used water for the demonstration and he had a beaker or a glass of some kind, and as the switch was tripped, the solenoid was actuated, a certain amount of water would drop into the container.

1399 Q. Do you recall what he did with that after the dropping—after this glass vessel was filled?

A. Well, we began—we got into that later. In the course of this demonstration, I pointed out to him, and I presume, I suppose he knew it already, that as the volume of the water in the container, in the tin can, lowered, the container would dispense less water because the head was not above—the filling was not the same, and he pointed out that that could be adjusted by a float and we conducted future experiments by always pouring back the same amount of water that was taken out.

Q. That piece of equipment that you saw there, could that have been used in your line at Bowman for commercial operation?

A. I don't believe it could have. It would have had to have been—well, from the sanitary standpoint, it was unacceptable at all, but if a float had been put in it, the principle would have been the same as the filler that we eventually got.

Q. Well, then, that was not a complete filling machine in itself that you saw there?

A. No, it was not.

Q. You have told about placing an order and I
1400 believe you said—that is, an order from Bowman to Mojonnier Brothers, for supplying a filler according to this principle that Mr. Mojonnier told you about?

A. That order was issued to Mojonnier-Dawson Company.

Q. Mojonnier-Dawson Company, I beg your pardon.

A. That's right. That's right.

Q. Now I believe you said that the form of the order was such as you regularly used. You mean a printed form of the order?

A. That is correct.

Q. Do you recall the wording of that order? Do you recall anything about it, the specific wording of that order? You said, I believe, that you had the order a few months ago.

A. I could not recall it. I have seen it a few months ago, but it specified a Mojonnier-Dawson Electromatic filler, I believe that was the wording used, in accordance with a letter, a letter from Mojonnier-Dawson Company dated—and I have forgotten the date now, but I think it was February 20th or 22nd, or something like that.

Q. So that this order, then, specified beyond just the description of the filler, that it was p[illegible]ed, as you say, in accordance with the letter. Now, a letter from
1401 whom?

A. From Mr. Mojonnier.

Q. To the Bowman Dairy Company?

A. That is right.

Q. And do you know, or do you recall in general why that was stated there or what the letter had to do with the order?

A. I have already pointed out that I don't—I am a little vague on the letter, except I do recall sketches, a sketch that was submitted. It is customary in all types of development projects of this sort, particularly on the ordering of new equipment, equipment which has not been field tested and accepted by sanitarians and by the Public Health Service and has not been proven in actual service, it is customary for us to have a clear understanding with the manufacturer that this is on a trial basis; either it works—because the filler hadn't been actually designed yet; we had to take Mr. Mojonnier's word for it that he would build a filler that would do the job, and so the order was

one of condition, that the filler either works or we don't pay for it.

Q. Mr. Geiss, do you recall a meeting at your office last December, I believe it was December 3rd, attended
1402 by Mr. and Mrs. Mojonnier and you, Mr. Stark and I believe your attorney? What is his name?

A. Mr. Zeiler.

Q. Mr. Zeiler?

A. That is right.

Q. And myself, at which you took out your entire file on this subject?

A. That is right, I do recall.

1403 Q. And do you recall that you produced at that time an original carbon of the order that you are talking about now?

A. That's right.

Q. Do you recall that I made a copy of that order?

A. Yes, I do.

Q. I will read this into the record.

"Bowman purchase order No. P2318. March 1, 1948. One single head electronically operated—"

"One single head filler"—

By Mr. Clement: Excuse me, your Honor. What is the nature of this?

By Mr. McCanna: The witness has testified that at a meeting on December 3, 1954, he produced an original of the order that we are talking about and I am asking him if he now recalls. I am going to read this and ask him whether or not that was the subject-matter of that original order. He has already said that he cannot find it, that it has disappeared, and I think the Court is entitled to
1404 know the facts as to that order. That is the best evidence there is. I will subsequently ask him what further he knows about the order.

By Mr. Clement: You already asked him if he recalls the language of the order?

By Mr. McCanna: Yes, I have, and he has told about the order specifying a letter.

I will reread this.

"One single head filler"—

By the Court: Now, this purports to be a carbon copy of the order?

By Mr. Clement: I believe he is reading from penciled notes, your Honor. That is why I wanted to know what the nature of the reading was.

By the Court: This purports to be a copy of—a copy you made of a carbon copy of an order Mr. Geiss produced in his office on December 3, 1954, is that it?

By Mr. McCanna: That is right, your Honor.

By the Court: Why don't you hand him the paper 1405 and ask him if it refreshes his recollection.

By Mr. McCanna:

Q. I hand you this paper and ask whether this refreshes your recollection of the contents of that order?

A. Yes, it does.

Q. I will read it.

By the Court: Ask him if it refreshes his recollection. Then ask him what his recollection is.

By Mr. McCanna:

Q. I ask you what your recollection is.

A. Well, our specific problem, as I pointed out earlier, was to fill two different sizes of containers. This order refers to filling two sizes of containers, one six ounce and one fourteen ounce.

The six ounce was the Quick Whip can and the fourteen ounce was the stainless steel drug store unit and that is all there is in the order beyond that except that it states: "As per your letter of February 20, 1948."

Q. And that is the letter to which you have testified?

1406 A. That is right.

Q. Do you know what became of that order or that copy that we looked at that day?

A. No, I don't. I—we had no records whatsoever and we had very few records of everything that transpired at earlier stages of development and we had a considerable time in finding the only, apparently the only remaining carbon copy of that order and I am afraid I searched again this morning before coming down and I had three or four other people doing the same thing, but, I am afraid that I can't find it.

Q. Now after this—what do you know about the installation of the filler which was delivered on that order, the installation at Bowman?

A. Well, we were concerned, as I previously explained, with filling two sizes of containers, the one, the stainless steel unit and the other, the six ounce unit. The smaller six ounce unit, the Quick Whip unit had not been perfected,

so even though we had hoped that by the time the filler was delivered, we would be ready for production, so the only container we had to concern ourselves with, with filling as soon as possible, was the stainless steel con-
1407 tainer and after the filler was delivered, experiments were run to test the filling accuracy of the filler and, as I recall, there was some initial problem, but it was, I would say, a week after the filler was delivered that we began filling the stainless steel container on a routine basis, daily.

And then, there was some trouble, I think with overheating of the solenoid and the exact time that that occurred, I don't recall, but it was soon after the filler was installed and was in service.

Only after prolonged use during any one interval, did this overheating occur. And Mr. Mojonnier was over on two or three occasions and it was finally—the condition was finally remedied.

1408 Q. Was that filler in an experimental line at the time of this experimenting that you are talking about?

A. No. I would not say it was in the experimental line, considering that we were filling the stainless steel containers. Once we got started on that phase of it, that part of the project was completed. We had not yet—we had not yet completed the project in development on the Quick Whip container. That came several months later.

Q. Was this filler used on the Quick Whip development?

A. Yes, it was used on the Quick Whip development.

Q. And was it taken off of this line and put on some other line?

A. No. This filler was mounted on a table and containers were put under the filler by hand, both the stainless steel container and the Quick Whip container. Once we had tested the filler in, oh, the weeks immediately following the delivery and found that it would fill satisfactorily and overcame the overheating problem, then you might say that filler was for commercial use for the stainless steel container.

Now, when we eventually went—eventually devel-
1409 oped, completed our project on the Quick Whip container, which was some months afterwards, the filler position was not changed. Some adjustments were made on it, the filler nozzle had to be changed between one size container—between running one size container and the other, and then we would fill Quick Whip containers.

Q. Did your company receive the approval of any health authorities with respect to this equipment that involved this filler?

A. Yes. The health authorities—it is customary, with all new equipment installations, to have the health authorities present on the day of installation or at least on the day of first use, so, I recall that they were present. Exactly when they were present, I don't know, but it was some time following the installation.

Q. Do you recall when this whip cream line actually went into regular commercial operation, approximately?

A. The Quick Whip line was put into commercial operation in October, 1948.

Q. So that in the period in between, from October back to this April and May date that you are talking about, you were still preparing in getting and working on the 1410 line, is that it?

A. That is right.

By Mr. McCanna: I believe that is all.

Redirect Examination by Mr. Clement.

Q. Mr. Geiss, this device we are speaking of is merely used for filling the containers. It has nothing to do with the gasifying of the container?

A. No. That's right.

Q. Or the capping?

A. That's right.

Q. Is the device that was delivered to you very similar to this Plaintiff's Exhibit 37 machine?

A. Yes, sir.

Q. Without this tank (indicating)?

A. Yes, sir, it is.

Q. (Continuing.) 16?

A. Yes.

Q. Did this filler mechanism work from the day that it was delivered to the Bowman Dairy Company?

A. Pardon?

Q. Did the filler mechanism work from the day it was delivered, so far as you know?

1411 A. No. I have already stated that there was a period of testing. We ran into some problems of overheating.

Q. Well, Mr. Geiss, I mean, in terms of dispensing liquid.

A. Oh, yes, it dispensed liquid the first day, yes.

1412 Q. You mentioned a testing program. I think it was with reference to the Quick Whip cans and the consumer reactance and so on. You had, however, already been filling M-100's for quite a long time?

A. That is right.

Q. And you went directly into filling the M-100's with this machine?

A. That is right.

Q. I believe you mentioned a company policy of a trial basis on equipment or at least you mentioned that this equipment was on a trial basis, is that correct?

A. That is correct.

Q. And that would be the same with any major equipment that the company purchased, I assume?

A. Any equipment which had not been field tested and proven and used in the dairy industry, it was necessary for us to have an understanding with the supplier that this machine must do the things you say it will do; it must be accepted by health authorities or we will not accept it.

Q. Were the problems encountered with this filler of substantially the same general nature as the prob-

1413 lems with any new piece of equipment?

A. Well, to the extent that it has to do a certain job. Any piece of equipment must do the job for which it is purchased and if it doesn't, it is unacceptable.

Q. But I am referring to the adjustments that you had to make in the machine; in other words, you have a shake-down period with any piece of equipment, don't you?

A. That is right.

Q. And you have to compensate for certain problems that arise?

A. That is right. Yes, that is correct.

By Mr. Clement: That is all. Thank you, Mr. Geiss.

By Mr. McCanna: That is all.

(Witness excused.)

By Mr. McCanna: Your Honor, can we have a few minutes recess to get ready?

By the Court: Yes.

(Whereupon a short recess was taken.)

1414 By Mr. McCanna: Your Honor, while Mr. Geiss was on the stand, he testified about this photograph, Plaintiff's Exhibit 13. Mr. Mojonnier also testified about that. It hasn't been offered. I would like to offer it into evidence.

By Mr. Clement: No objection.

By the Court: It may be received.

(Said document, so offered and received in evidence, was marked PLAINTIFF'S EXHIBIT NO. 13.)

By Mr. McCanna: I would now like to offer in evidence the deposition of Carl F. Allen, which was taken on behalf of the plaintiff.

By the Court: Is that C. A.?

By Mr. McCanna: Carl, C-a-r-l F. Allen. It was taken at the office of Brooks Supply Company of Louisiana, Inc., 609 Montgomery Street, West Monroe, Louisiana, on April 8, 1955, pursuant to notice dated April 4, 1955.

I took the deposition, and Mr. Kipnis attended by special arrangement for all of the defendants.

I would like to have Mr. Pillote read the answers.

1415 May we have the original deposition?

"CARL F. ALLEN, the witness, having been duly sworn to tell the truth, the whole truth, and nothing but the truth, testified as follows:

Direct Examination by Mr. McCanna.

Q. Please state your name.

A. Carl F. Allen.

Q. And your age?

A. I will be forty-eight the twenty-fifth of this month.

Q. Your residence?

A. 2505 Kentucky Avenue, Joplin, Missouri.

Q. And your occupation?

A. Vice President and Sales Manager of the Brooks Supply Company.

Q. Is that the same Brooks Supply Company, of which Mr. Frank C. Brooks is President?

A. Frank C. Brooks is President; Mabel C. Brooks is Secretary-Treasurer, and I am Vice-President. I might add that is Brooks Supply Company of Missouri with headquarters at Joplin, Missouri.

1416 Q. How long have you been associated with Brooks Supply Company?

A. Since the early part of 1940.

Q. State briefly the nature of your duties.

A. My duties are as Sales Manager, to do whatever work is necessary toward promoting sales. Also, I have

charge over the service in the Southern Division and at the present time, I am setting up the preforming operation at Monroe and installing branch warehouse and office at Jackson.

Q. When you say preforming operation, what do you mean?

A. To preform Pure-Pak cartons, ready for the small dairies and medium size dairies to fill, seal and staple and dispense his wares to the consumer from precut and printed flat cartons, which are manufactured under Ex-cell-o patents.

Q. This preforming machine which you have here, made by Ex-cell-O, actually fills milk into the cartons?

A. It would if it had additional equipment installed upon it. However, these machines which we have in operation here were sent out for preforming operations and therefore, the filling and stapling equipment was
1417 not installed.

Q. I hand you a contract marked Plaintiff's Exhibit 98 and ask whether you are familiar with that?

A. I have seen this contract before. In fact, I was present when the original contract was presented and the arrangements were made at Woodstock, Illinois, in the fall of 1952, immediately following our visit to the National Dairy Show at Chicago.

Q. Would you like to elaborate on the contract, or agreement?

A. You mean with reference to the signing of the agreement?

Q. Yes, if you know anything that would be proper.

A. We met in the offices—

Q. When you say, 'we', whom do you mean?

A. Mr. and Mrs. Brooks and I, namely, Frank C. Brooks, M. C. Brooks and myself journeyed to Woodstock to keep an appointment we had made with Maurice Brasile. We stayed at the Ace Motel, which was a pre-arranged reservation. We were to meet him the following morning. We met at his office at—I would say around eleven o'clock in the morning because he had been out the night previous late, and we discussed this agreement or contract covering the sales of fillers in the territory which we traveled
1418 or represented other manufacturers. Mr. Brasile stated that he didn't want to complete the agreement at that particular day due to the fact his secretary, or steno, was not at the office and that he would have to have

another member of the organization sign the agreement. However, we insisted that we have a working agreement before we left Woodstock due to the fact we were anxious to make this filler available to the small and medium size dairies, which were in distress due to being unable to meet competition.

Q. We will go into that later, but if you have anything to say about making the contract, you can proceed.

A. Mr. Brasile left the office in company with a young fellow, a purported employee of the U. S. Filler Company, and returned sometime later with the agreement which I presume and believe is this agreement.

Mr. and Mrs. Brooks signed one copy and gave it to Mr. Brasile. He, in turn, gave them a copy. We were each to place corporate seals on the copy which we held in exchange for the other party's files. By that, I mean that Mr. Brasile stated that he did not have the corporate seal available. We, in turn, did not have a corporate
1419 seal with us on this trip, which agreement was in harmony with both parties concerned. We had a mutual understanding that this agreement would go into effect immediately.

Q. And you have operated under this agreement?

A. We operated under this agreement until—well—sometime in June or July of the following year, at which time we could get nothing but promises from U. S. Filler Equipment and we knew Mojonnier-Dawson was making shipments. We could not understand why they were not making shipments to us. We were not behind in our accounts we had requested. They were shipping to us sight draft order bill of lading. Therefore, there was no chance for discrepancy in payment for filling machines."

By the Court: Therefore what?

By Mr. McCanna: (Reading.)

"Therefore, there was no chance for discrepancy in payment for filling machines.

Q. Now, Mr. Allen, I don't believe you have mentioned anything about what filling machines you were talking about. What were they?

A. The filling machine which was discussed and which was mentioned under our agreement is what is known
1420 as a Model CP, Mojonnier-Dawson Electromatic Filler. This machine was manufactured by Mojonnier Dawson Company of 9151 West Fullerton, Franklin

Park, Illinois, but was available to us only through U. S. Filler Equipment, Incorporated, who claimed they had exclusive rights for sales of same throughout the United States. However, later and with no notice, the U. S. Carton Forming Corporation started invoicing us for filling equipments and parts. However, since we had no contract with such a corporation, although I understood it had practically the same set of officers as U. S. Filler Equipment Corporation, Incorporated, we did not honor payment of such invoices to U. S. Carton Forming Corporation, and to the best of my knowledge, all checks were made payable to U. S. Filler, Incorporated and were accepted as payment of such invoices.

1421 Q. Mr. Allen, this contract mentions that the brochure is attached to it and is incorporated as a part of the contract. Do you find that brochure attached?

A. The brochure was not attached at the time. By reason of explanation, new brochures were to be made available in the very near furture and it was, more or less, understood that this new brochure would become a part of the contract.

Q. Prior to this contract, had you seen any literature put out by U. S. Filler Equipment, Inc. showing this Mojonnier filler?

A. I had not.

Q. Do you recall the first such literature that you saw?

A. The first such literature that we saw was a black and white brochure sent to us from—through U. S. Filler, Incorporated, but came directly from the printers; one of the reasons for this being firmly established in my mind was the fact that they came in C. O. D. Mr. Brasile asked us to accept these, paying the C. O. D. charges, and giving us the privilege of deducting such charges from our invoices.

1422 Q. Can you identify that piece of literature?

A. Yes, there were two types of them. They were imprinted with the Brooks Supply Company, name and address on the back of them, one of them giving our Dallas addresses; the other one giving the Joplin, Missouri, addresses. These were to be used for letter stuffers, for mail advertising and also for salesmen uses.

Q. I hand you a circular marked Plaintiff's Exhibit 99 and ask whether you can identify that.

A. This is one of, or similar to, the package which we received at our Dallas branch. It has the Dallas address

on it. We received a similar package at our Joplin offices for distribution in the Joplin area.

Q. Those are the C. O. D. packages you referred to?

A. That is correct.

Q. And what connection does that Mojonnier-Dawson filler have with the filling device, which is mentioned in this contract of October 1, 1952, Plaintiff's Exhibit 98?

A. The agreement describes the Majonnier-Dawson filler, and I would say, more or less, in its entirety.

1423 Q. Is that the same filler as shown on Plaintiff's Exhibit 99?

A. It is the same, showing the Electromatic timer, which is—you might say—the heart of the machine, the bowl or reservoir which holds the milk and the solenoid coil, which operates the valve and controls the flow of the milk to a given sized orifice to produce an equal fill, or quantity, each time the timer has been actuated.

I might add that Mojonnier-Dawson builds several type fillers and by using this descriptive manner in which I have described this—it's the manner which I would know to point out this particular filler.

Q. You mean at the time this contract was entered into, Mojonnier-Dawson built several types of fillers?

A. Mojonnier-Dawson was building fillers for aerosol equipment for filling paints, sprays, shaving cream, and so forth and so forth, but in order to describe and particularly point out any one type filler, it must be described.

Q. Mr. Allen, I believe you mentioned a while back something about small dairies being in distress be-

1424 cause of competition at this time. Would you explain that, please?

A. That is one of the important factors as to why we were anxious to make this agreement with the U. S. Filler Company; this filler being so simple and easy to operate and low in price would enable the small and medium sized dairies that could not have paper carton facilities in their plant, due either to lack of funds in order to make the large investment necessary for other types available, or inaccessibility to purchase this type of filler. There had been no one to introduce and push the sale of this type filler in the territory we represented and it was not well known in our territory until we started advertising through mail and word of mouth by our salesmen.

Q. Now, Mr. Allen, at that time, did you know of any

other milk filler available for these small dairies for the needs that you were talking about?

A. The only other filler available that would fill all sizes as described in the circular, which you recently handed me, Plaintiff's Exhibit 99—the only other filler available for all sizes was very expensive equipment
1425 owned and controlled by Ex-cell-O Company, requiring initial investment, monthly rental over a period of months and minimum royalty payments based on the amount of units produced. This placed this machine out of reach of the small and many medium sized dairies, whose volume was not large enough to equal the minimum payment they had to make to obtain such equipment.

Q. At that time, what kind of containers did these small dairies usually use for their milk?

A. The small dairies had very little choice. They could use either cone-shaped bottles—cone-shaped quart bottles—and smaller sizes manufactured and controlled by Sealright Company, Incorporated, or a few dairies were able to obtain cartons from American Can Company, but this supply was very limited. Both sizes were available only in quart and smaller sizes.

Q. How did the small dairies fill these cartons that you are talking about?

A. Each had to be filled on either special equipment or special attachments for some of their present equipment.

Q. Are these cartons you are telling about made of glass or paper?

1426 A. They are preformed cartons, manufactured on specially designed equipment, which is owned or controlled by the companies holding patents for same.

Q. At that time, wasn't it common for the small dairies to use glass bottles also for milk?

A. Most of the smaller dairies were bottling in glass, but glass was becoming more and more obsolete and unacceptable to the consumer trade, especially to the housewife who made her purchases at the corner market or the super market. Also, the groceryman in the market objected to handling glass containers, knowing that paper was available. Therefore, he would direct his purchases from the dairy that made his product available in paper, or maybe we should say single service containers.

Q. What do you mean by single service containers?

A. Once used and then disposed of.

Q. You mean these paper containers, or cartons, that you are telling about?

A. Once it is used—once it is opened, the paper container then cannot be really sealed without special equipment. The glass bottle, which we term as the many trip container—all the housewife has to do is to cover it
1427 and it can be used over and over again, but the paper container has to have special equipment to reseal it once it has been opened.

Q. Mr. Allen, you said something about the special equipment available at that time for filling paper cartons by some other suppliers than Mojonnier-Dawson. Do you know whether that other equipment operated on the same principle as the Mojonnier filler?

A. To my knowledge, part of the other fillers were similar in completion, or the end means. However, each has its own method of handling the paper, or carton, from the time it is paper until it is filled and in the cooler. Some types are filled with displacement, but the Mojonnier filler is filled with a valve or controlled orifice operated by a timer, which measures the milk.

Some fillers furnish their own wire and use different temperatures for sealing, while Mojonnier-Dawson machines use preformed staples. The Sealright carton, to which we referred, used a cover cap similar to a glass milk bottle.

Q. Now, Mr. Allen, I hand you a photograph
1428 marked, for the purpose of identification, Plaintiff's Exhibit 113, and ask you to tell me—to state briefly whether you could identify that machine.

1429 A. I can identify this machine. I have seen it before and seen it partially operated—

Q. Did you say you haven't seen it before?

A. I have seen it before upon three different occasions. I first saw this machine in a machine shop at Woodstock, Illinois, in the early spring of 1953. I saw it again two or three months later with a few changes, then, I saw it the last time in the month of June, 1953, immediately after we had attended a sales meeting consisting of Mr. Brooks, myself and six of our representatives, at the request of Mr. Brasile. The last time I saw this machine, I helped crate it for shipment to Ex-cell-o Corporation of Detroit, Michigan whom I was told would manufacture this machine.

Q. Who told you that?

A. Mr. Maurice Brasile.

Q. And where did he tell you that?
A. In Woodstock, Illinois.
Q. At what time or place?
A. At several meetings, it was mentioned—in his office and also having dinner with him one evening.
Q. At what time was this in relation to the three meetings, or occasions, you have told about?
1430 A. What—clarify your question, please.
Q. At what of these three occasions of having seen the machine, did Mr. Brasile tell you that it was to be made by Ex-cell-o?
A. On the first time it was disclosed to me, he was developing a filler of his own. We discussed it and talked over different features to be involved. I asked him who was to manufacture it. At that time he was not decided and thought they might manufacture on their own if they could get proper financing. However, he asked that we do not disclose his plans or intentions to the Mojonnier-Dawson Company with whom he knew I was personally acquainted.
1431 "The second time we discussed this machine, he stated that Ex-Cell-O was interested and were sending a couple of their representatives to look the machine over. At another time, he stated that their conception of the machine was very favorable and that they would like for him to send it to Detroit. This was over a telephone in a conversation between Mr. Brasile and myself, at which time we discussed the sales meeting, which eight of us attended. We asked that he hold up shipment of this pilot model to Ex-Cell-O until it could be displayed to our salesmen, to which he agreed.
Q. Did you—what did you do in response to this request?
A. To which request do you refer?
Q. Well, as I understood, Mr. Brasile wanted you to see this machine. Did you and your associates comply with that?"
By Mr. Kipnis: And this is my statement:
"Mr. Kipnis: I understood that the witness last said Mr. Brasile told him he was going to ship the machine to Ex-Cell-O and he asked him not to do it and wait until
1432 Mr. Brooks and some of the salesmen could look at it. Is that not right, Mr. Allen?
"The Witness: That's correct.
"Mr. McCanna: I see. Go on, Mr. Allen.

"The Witness: Mr. Brooks, myself and six salesm drove to Woodstock; we stayed at the Ace Motel and we attended a sales meeting in the offices of U. S. Filler Equipment, Incorporated, at which time they displayed this machine as shown. However, the machine did not operate satisfactorily. They didn't use milk or liquid in the tank, but filled them with tap water.

"Mr. McCanna: Q. Filled what?

A. The cartons. They filled the cartons with tap water from a faucet, pushed them through the machine and let the machine shear a safety pin, which involved repair and which we did not wait to see, but they did seal and staple two or three cartons, which our boys returned with them. We asked Maurice Brasile if it was agreeable with him that we take photographs of this machine and offer it for sale immediately, to which he replied that the machine as shown would not be very presentable to the trade. Therefore, he would give us photographs, which had been

1433 retouched, before we left Woodstock if they were available. Otherwise, he would mail us a supply for our representatives to carry, and that we could start immediately taking orders and that he thought the machine would be available for delivery in three or four weeks. However, we discussed delivery promises he had made in the past and warned our representatives not to make any definite statements as to any promise of delivery. Also, we failed to warn them not to make promises that Ex-Cell-O would manufacture, which we later learned was a misleading statement because for some reason or other, Ex-Cell-O refused to manufacture the machine as they deemed it not practical either from an engineering or operating standpoint—viewpoint. The latter was discussed in Detroit with Mr. Scott or Mr. Huffman in July 1953. Immediately after this sales meeting, our boys were all enthused and started talking to all the customers about this new filler and seeking orders for the same, which resulted in one firm order from Broadview Dairy, Topeka, Kansas, which order was requisitioned in due course from U. S. Filler and which order was never filled.

1434 Q. Is this the order, Plaintiff's Exhibit 100, about which you have just testified?

A. This is a copy of our—what we term our factory requisition, which covers said order to Broadview Dairy, which calls for one automatic Ex-cell-o Pure-Pak carton filler to fill half pints, third-quarts, and half gallon cartons.

Q. To whom was that sent?

A. This was sent to U. S. Filler Company, Box 71, Woodstock, Illinois. We later received acknowledgment from this asking that we forward a down payment of a thousand dollars on this filler. We had not been in a habit, or when we initially started selling fillers, U. S. Filler Company only asked for ten per cent down payment with orders. Later, when we requested that they ship us order bill of lading, and in order to keep our accounts and bookkeeping straightened out with them, we did not send any down payment. Machine was shipped sight draft for the full amount. Therefore, we could not understand why that they requested the thousand dollars down payment unless we were going to have to finance the building of this machine, and up until this time, we had no assurance that the same would operate.

1435 Q. Is this the communication to which you refer—this letter, Plaintiff's Exhibit 101?

A. That's right. That's the letter from U. S. Carton Forming signed by H. L. Menzies. I answered the letter to him stating that if he would give me a definite delivery date and satisfaction that the operation would be satisfactory, that then we would ask the customer for a down payment.

Q. Is this the letter to which you refer, marked Plaintiff's Exhibit 102?

A. That is right. However, I also asked for guaranteed delivery price too, something which has not been settled on before. All we had was an estimated selling price.

Q. Did you personally write this letter, of which this Plaintiff's Exhibit 102 is a carbon copy?

A. I dictated the letter. My steno wrote the letter; I signed it.

Q. Now, Mr. Allen, I would like to have you go back to the sales meeting in June of 1953 and tell whether anything was said about the Mojonnier Company in connection with this proposed filler, shown on Plaintiff's Exhibit 113.

1436 A. The only thing we were told in regard to Mojonnier-Dawson Company was that Ex-cell-o was going to manufacture it. Therefore, they asked that we keep, more or less, secret their intentions from Mojonnier Dawson Company. However, I might go back and add that from the time that this machine was first talked about, there was some discussion as to whether or not it would

work without the timer and solenoid control. I discussed with them where that we were going to obtain parts, where we were going to obtain a timer, etc., since I was under the impression that Mojonnier had the patents on the timers and I wasn't aware that there were any other manufactured. They informed me—by they, I mean Gene Boone"—

By Mr. McCanna: Might I say here, your Honor, that all through this deposition, the reporter has written Gene Blum as B-o-o-n-e and may we have the name Gene Blum?

By Mr. Kipnis: That is agreeable.

By the Court: That is agreeable, very well.

By Mr. McCanna (Reading):

"Q. * * * I mean Gene Blum, Maurice Brasile and myself, in Woodstock, were having this discussion that the RCA lookup and the timer, which was the basic principles
} of the timer that Mojonnier was using, was available
1437 for anyone to use. Also, Gene Blum stated that one of his relatives had perfected a timer, which was more sensitive, much more compact and more trouble free than the timer which Mojonnier was using.

This was all to be kept secret because if the cam-operated control did not operate satisfactorily, they would have to resort to a timer and solenoid method of control of the measure of milk in the filling of their cartons.

1438 "Q. At any of these meetings—these three occasions which you have testified meeting Mr. Brasile at Woodstock—did you see any electronic timers, or filling equipment, of the type used in the Mojonnier-Dawson filler?

A. On several occasions, I saw Mojonnier-Dawson timers in U. S. Filler's office. However, I assumed that they were timers, which had been brought in for exchange or repair on the way to Mojonnier-Dawson's office. However, in July, on a trip by Mr. and Mrs. Brooks and myself to Woodstock at the request of Maurice Brasile for a meeting with Mr. Lewis, there were several timers in the office. These were at different points in the office and several looked as though they had been apart, or were being repaired. At this particular meeting, there were several Mojonnier-Dawson fillers, or parts of fillers, disassembled and laying on desks, tables, etc. as if they were being measured, or repair parts discussed, which could mean that they were doing their own repair work, and during this meeting, or rather during the time that I was in Woodstock at this time, there was much sketch work and dis-

cussions of drawings and parts going on. Also,
1439 Maurice Brasile was interrogating small, independent manufacturers, or workmen—I am going to have to go back there; that was on another trip. I got two trips entangled in that one. That was the trip before."

* * * * *

"Mr. McCanna: But Mr. Allen, go ahead and explain what you saw and what you did."

* * * * *

"The Witness: Mr. Brasile was discussing with different spinners prices on floats and tanks, presumably toward the manufacture—"

By Mr. McCanna: I believe you missed an answer there. It is "On the trip" there.

(Reading):

"The Witness: On the trip before the last trip—in other words, in June, he was discussing—

Mr. McCanna: Mr. Brasile?

The Witness: Mr. Brasile was discussing with different spinners prices on floats and tanks, presumably toward the manufacture of a small semi-automatic filler and while I was in his office, one manufacturer brought in a spun
1440 tank which had a float and valve arrangement attached. Mr. Brasile explained to me the features of this float and valve and discussed the superior features it had over the float and valve assembly which was being used by Mojonnier-Dawson inasmuch as it would control and operate against higher pressures, which were desirable in many of the plants where we have made installation of the fillers under discussion.

By Mr. McCanna:

Q. At that time, Mr.—did Mr. Brasile say how the valves were to be operated?

A. There was some discussion as to how to compensate for wear on the cam-operated type valve and he expressed assurance it would work all right on the automatic machines. However, since we had to have a low priced, smaller filler for the small dairyman, it would be necessary to build a filler similar to the one Mojonnier-Dawson was manufacturing and since it would not be motor operated, it would necessarily be operated with a solenoid coil, micro switch and timing device.

Q. Mr. Allen, I believe you have said something about having been furnished a quantity of these photographs,

Plaintiff's Exhibits 112, by Mr. Brasile. Do you have
1441 any further recollection of the making of that photo-
graph in connection with your meeting in June, 1953,
in Woodstock?

A. This photograph, Exhibit 112, is the one that I discussed earlier and which I said was promised to our representatives on the sales meeting trip to Woodstock. This is an artist's conception, or touch-up of the filler, Exhibit 113. This was made by taking the photograph, Exhibit 113, and touching up, which is an artist's trade, to bring out what you eventually hope that the finished piece of equipment will look like. These were furnished to us in a small quantity.

Q. Do you still have some of these photographs that were supplied at that time?

A. I still have two or three and the original packing that these were sent to me. As I recollect, however, they gave us a few of these before we left Woodstock. The larger quantity was later sent to us through the mail to be distributed.

Q. Mr. Allen, you have mentioned a meeting with a Mr. Lewis. What Lewis was that?

A. How, where and when Mr. Lewis entered the
picture of the U. S. Filler Company, we were not
1442 informed. However, we were called to the meeting
at Woodstock. This meeting was delayed one week at Mr. Brasile's request, so we drove to Woodstock on Sunday and on Monday, met in the offices of U. S. Filler. Present were: Maurice Brasile, Gene Blum, and Mr. and Mrs. Brooks, myself, and later, Mr. Lewis.

Q. Was that Albert A. Lewis?

A. I believe that that is his full and correct name.

1443 Q. Will you go on now?

A. Before the meeting was—before Mr. Lewis' arrival, Mr. Brasile would not make a definite statement nor a definite answer and seemed very dejected. Also, Mr. Blum had the same attitude. Their only answer to any question we might ask would be, 'Mr. Lewis will answer that.' Mr. Lewis came in; he discussed several things with Mr. Brasile and Mr. Blum seemed very excited and allowed us very little time; he told us that they had made a few commitments and that some of these would be impossible for them to carry on and we were, more or less, led to believe that our agreement was no longer of any value. He assumed, or led us to believe that he—

Q. Who?

A. Mr. Lewis led us to believe that he was in full command, although we had been informed of no changes, of both U. S. Filler Company and U. S. Carton Forming Company. To any question which we would ask him, we would either get a 'no', or an elusive or evasive answer. We left very disgusted and feeling that the investment we had built up and the organization to push these fillers were probably—

Q. By these fillers, you mean what?

1444 A. The filler which the U. S. Carton Forming Company had been furnishing us, namely, the Mojonnier Dawson Model CP fillers.

Q. I don't recall whether you have fixed the time of this meeting with Mr. Lewis. What is your best recollection of the time of this meeting with Mr. Lewis and this group?

A. It was in the month of July and it was in the latter part of July. The exact date I do not recall.

Q. Do you have any recollection of its relation to your trip to Ex-cell-o in Detroit, to which you have testified?

A. We arrived in Woodstock on Sunday evening; we met with Mr. Lewis on Monday and I believe it was Wednesday night of the same week that we spent the night in Detroit. Nevertheless, it was the same week. I am not certain just which night it was, but it was all in the same week because we only made one trip to Detroit that year.

Q. And what was the outcome of that trip to Detroit?

A. We had found that we had been told so many tales, or stories, or untruths, by the U. S. Carton Forming Company, that we had, more or less, lost confidence. In

1445 order to check on their stories, we decided it was best to make the trip to Ex-cell-o and find out from them firsthand whether or not they were going to manufacture the filler for U. S. Filler Corporation as we had been led to believe.

Q. What did they tell you?

A. They told us that they were not going to manufacture, at least in its present form; that if they presented them with a filler that was practical, they would manufacture it. They discussed with us the labor charges, etc., the manufacturing, etc., on this trip. In other words, Ex-cell-o is the manufacturing concern and sell their time and services for the manufacture and development of different types of equipment.

Q. Do you have any other literature put out by Mr. Brasile, or his company, or companies, relating to the Mojonnier Dawson filler?

A. On one of the trips to Woodstock in 1953—I believe it was in May or June—the printers had just delivered to the U. S. Filler office several packages of a new, colorful brochure—red, white, and blue in design—advertising the Mojonnier Dawson filler.

1446 Laughingly, I asked Maurice Brasile why that he was spending so much money on this brochure when he was figuring on coming out with his own filler. He stated these had already been to the press; he was committed on them, but he didn't think he would send them out, but would use the same wording to a certain extent to advertise his new machine. However, he did give me two packages of these brochures to use in our territory.

Q. Did you use them?

A. We put out nearly all of them.

Q. Do you have one of these brochures?

A. Yes, I have one. This is it."

By Mr. McCanna: At this point, your Honor, the witness produced this brochure and I am asking that it be marked as Plaintiff's Exhibit 114 for identification and I offer it in evidence.

(Thereupon said document was marked Plaintiff's Exhibit No. 114 for identification.)

By the Court: Is there any objection?

By Mr. Kipnis: No objection, your Honor.

By the Court: It may be received.

1447 By Mr. McCanna: Your Honor, I believe it has been marked before and we will just withdraw that last notation.

It was marked Plaintiff's Exhibit 108 and I believe it was identified by Mr. Lewis. It is being offered as Plaintiff's Exhibit 108.

By the Court: Very well. It may be received.

(Said document, so offered and received in evidence, was marked PLAINTIFF'S EXHIBIT NO. 108.)

By Mr. McCanna: That was all of the direct examination.

By Mr. Kipnis: This is cross-examination.

By Mr. Kipnis: (Reading):

"Cross-Examination by Mr. Kipnis.

Q. Mr. Allen, as I recall, this contract you referred to with U. S. Filler Equipment Corporation was dated October 1, 1952; is that not right?

A. That's right.

Q. Now, that's Plaintiff's Exhibit 98.

I suppose after this contract was entered into, you went ahead and started to promote the sales of these machines; is that correct?

1448 A. That's correct.

Q. And by February, 1953, you had sold a number of them, I assume?

A. February of 1953, yes.

Q. And had installed them?

A. That's right.

1449 Q. Had some experience with the customers and their operation?

A. Correct.

Q. And did you find that the machines needed improvement in various respects?

A. I never saw a machine yet that couldn't stand improvement. However, we had considerable trouble when we first got started, but it was due more to a lack of educational training in our servicemen, which we later realized.

Q. Did you have service men?

A. We had service men. In fact, I did the major portion of the service work myself until I could train my fellow workers.

Q. How many did you have all together?

A. At the present time, which is about the same as we had a year ago, we have five trained men.

Q. Did any of them go up to Chicago to learn how to service these machines from U. S. Filler Equipment, Incorporated?

A. U. S. Filler Equipment didn't have what we called, or termed, in our opinion, competent service men at that time.

Q. I see. Now you did have complaints about the 1450 slowness of the operation of the machines?

A. Correct.

Q. And didn't you also have complaints about the fact

that the stapling mechanism didn't always seal up the carton properly?

A. No.

Q. You didn't have any trouble with them leaking?

A. That is not right in one sense of the word. The stapler does not seal the carton. The carton is sealed by the heater.

Q. And then drive a staple through it to hold it?

A. At the same time.

Q. Yes. Well, did you have some difficulty with the mechanism that performed that function?

A. We had trouble with it until we learned to service it and to properly adjust it.

Q. Yes. Now, when you had trouble, particularly these complaints which we have discussed, you told Mr. Brasile about them, didn't you?

A. We discussed them with him and asked for his advice as to how to correct them.

Q. And did you tell him you thought he ought to do something about improving the operation of the
1451 machine so that it would fill more cartons per minute than it did fill?

A. We told him that there was very much demand a market for a filler with more speed, or as we term it, more filler capacity.

Q. I see.

A. More units per hour."

By Mr. Kipnis: Now go over to the next page, the first question:

(Reading):

"Q. Now Mr. Allen, as I understand you, the first time you saw the pilot model of the machine was sometime in the spring of 1953; is that correct?

A. That is correct.

Q. And when you saw it, did it look like the machine shown on the photograph, Plaintiff's Exhibit 113?

A. Not the first time I saw it.

Q. Did it differ in any way?

A. Yes.

Q. What were the differences?

A. The differences were in the way that the cam was operated, the difference in the way that the cartons
1452 were transported in the machine, and the difference in the opener and closure.

Q. Now, while we are talking about that, when you say the difference in the way the cam was operated, do you mean the cam was operated by a cam arrangement?"

By Mr. Kipnis: It says "cam," but he means "the valve."

(Reading):

"* * * the valve was operated by a cam arrangement?

A. The valve was operated by a cam arrangement.

Q. That's right. And was there a cam arrangement on the machine when you saw it later in June, 1953?

A. Yes.

Q. It had a cam on it?

A. That's right.

Q. And this mechanism that has been marked, apparently with an 'A' pointing to it, and has some perpendicular fingers spaced evenly along this horizontal bar,—was that on the machine in February, 1953, when you saw it?

A. No, it was not.

Q. And that mechanism was on the machine, however, when you saw it in June of 1953?

A. Yes, sir, because the explanation they gave me
1453 was that you could not push the number of cartons necessary to operate this filler and fill up the track without pressing the cartons.

Q. Yes. So they had these little fingers to separate one carton from another?

A. That fact we discussed, using this method of furnishing power, motive power to the cartons."

By Mr. Kipnis: Go over to the last question on page 33.

(Reading):

"Q. Now, Mr. Allen, as I understand it, this mechanism that we were talking about that has these perpendicular fingers was—wasn't it your understanding that it was for the purpose of speeding up the operation; that is, moving the cartons along automatically?

A. Just to furnish motive power. There is no way you can speed it up. It is the same type of feeding arrangement that we have used for years and years.

Q. Yes. Now, as I understand it, in this machine that was shown to you in June, 1953, what Mr. Brasile told you he was trying to do was to speed up the movement of the cartons to the machine and thereby fill more cartons
1454 per minute than with the machines you had been selling? Is that not correct?"

* * * * *

"The Witness: The principal reason given me for developing this type of machine was to make it more automatic.

Mr. Kipnis: That's right.

The Witness: To use less labor."

By Mr. Kipnis: Now go over to the last question on page 38.

1455 By Mr. Kipnis: (Reading.)

"Q. Well, at least, we understand each other. First, you fill it and then you seal it.

Now, in this machine that Mr. Brasile showed you and which is shown in the photograph, Plaintiff's Exhibit 113, his intention was to break the carton open and drop it in this conveyor and allow the conveyor to carry it first to the filling station and then to the heating and sealing station; isn't that right?

A. I can't tell you whether that's right or not.

Q. Did he tell you that that was what he wanted to do?

A. No, sir, he didn't say anything about breaking it open.

Q. Well, did he explain how the carton was going to be opened so that you could fill it with milk?

A. He had an arrangement on there that he contended would open it.

Q. Oh, automatically.

A. But as far as seeing it open and seeing it work, I never have."

By Mr. Kipnis: We go over to page 40.

By Mr. Kipnis: (Reading.)

1456 "Q. In other words, that demonstration at that meeting was a demonstration of a pilot model, or a crude model; wasn't it?"

By Mr. McCanna: Where are you reading from on page 40?

By Mr. Kipnis: Page 40, the first question: "In other words, that demonstration—"

By Mr. McCanna: My first question starts: "Well, I think that's correct, Mr. Allen."

By Mr. Kipnis: Well, I left that out.

By Mr. Kipnis: (Reading.)

"Q. * * * In other words, that demonstration at that meeting was a demonstration of a pilot model, or a crude model; wasn't it?

A. It was the model as shown in Exhibit 113.
Q. Well, it wasn't in operating condition, was it?
A. Supposedly.
Q. It didn't actually work, did it?
A. It didn't work for us. It sealed two or three bottles; however, we were led to believe that it had been operating.
Q. I see. But you didn't see it work?
A. I didn't see it work.

Q. I think you said that when you saw the machine
1457 at various times that you mentioned and I am referring to the machine as shown in photograph Exhibit 113 and the other models that you referred to, it didn't have a solenoid on the machine, did it?
A. No, sir.
Q. There was no solenoid on the machine?
A. No, sir.
Q. And there was no timer connected to the machine, was there?
A. No, sir.
Q. It wasn't connected to a main supply line, or supply tank, was it?
A. To what do you refer?
Q. Well, to a larger tank; was this tank on the machine connected to a larger tank?
A. No, sir.
Q. The tank on the machine was a galvanized iron tank; was it not?
A. Right.
Q. And such a tank cannot be used in the dairy industry, can it?"
By Mr. Kipnis: It should be "can it?" She has got it wrong.

By Mr. Kipnis: (Reading.)

1458 "A. Not legally.
Q. You have to have a stainless tank, don't you?
A. Right, seamless.
Q. Seamless? And this tank shown on the machine as you saw it didn't have the legal type of tank, did it?
A. No, sir.
Q. And do you remember—there was no valve in the bottom of the tank, was there?
A. Yes, sir, there was.

Q. There was? There was no float in this tank, was there?

A. That I cannot answer. I do not believe there was. No, there wasn't.

Q. And there was no switch on the machine to actuate the solenoid to open the valve, was there?

A. No, sir."

By Mr. Kipnis: Then we go over to page 46, the fourth question from the bottom.

By Mr. Kipnis: (Reading.)

"Q. I don't recall what you said. Did you testify that at that meeting on June 10, 1953, Mr. Brasile gave you one or two photographs like Plaintiff's Exhibit 112?

1459 A. Not at the meeting, but later in the week.

Q. Later in the week?

A. That's right.

Q. Did he give them to you personally?

A. Right.

Q. And do you recall about how many he gave you?

A. No, but I don't think it would exceed ten.

Q. I see.

A. And I received another bunch, which I would say contained about fifteen perhaps, in the mail."

By Mr. Kipnis: Now go over to page 49, the second question from the bottom.

By Mr. Kipnis: (Reading.)

"Q. And did you contact Mr. Mojonnier and try to get deliveries from him?

A. I have, but not to get deliveries through him. We contacted him several times and he would tell us that we would have to contact Mr. Brasile. Mr. Brasile had arrangements for shipping and that Mr. Brasile would change our orders around at several times different times when fillers were on the floor and were even tagged to be shipped to us, and then, Mr. Brasile, for some reason of his own, would change and ship them to one of our other competitors, not exactly a competitor, but into another territory.

1460 Q. Well, did the situation get worse sometime around February of 1953?

A. Yes, sir, it did."

By Mr. Kipnis: Now go over to page 54, the third question from the bottom.

"Q. Now, I believe you testified that you told Mr. Mojonnier about the machine shown in the photograph, Plaintiff's Exhibit 113, in July of 1953; is that right?

A. Either July or the first part of August; it was within the week of our trip to Detroit.

Q. And what did you tell him about—what did you tell him about it?

A. I just verified the statement that they were working on a filler of their own. He had already been informed of it. He asked us if we knew anything about it."

By Mr. Kipnis: Over to page 56, the fourth question from the top.

(Reading):

"Q. I believe in describing the filler shown in Plaintiff's Exhibit 99, you are referring to the fact that the solenoid coil operates a valve, which controls the
1461 flow of milk through a given sized orifice; is that correct?

A. Correct.

Q. Is there any indication of the size of the orifice on this circular, Plaintiff's Exhibit 99?

A. Any indication as to the size and dimensions? No. There are no dimensions given.

Q. Yes. Just what size orifice does it have to be to operate? Do you know?

A. That would depend.

Q. Depend on what?

A. On the size of the carton that you were going to fill, the amount of pressure that was exerted on it and the product that you were going to fill.

Q. But there is nothing in this circular that gives you that information, is there?

A. Do you mean nothing that gives you the dimensions?

Q. Yes.

A. No, there is nothing that gives you the dimensions because you would have to have too many dimensions. You would have to have a separate dimension for every product that could be filled with this filler."

By the Court: How much more have you?

1462 By Mr. Kipnis: I skipped quite a bit, your Honor, and there are about fifteen pages. There isn't very much more.

By the Court: Well, we will recess at this time until 2:00 o'clock.

By the Marshal: This Honorable Court now stands at recess until 2:00 o'clock this afternoon.

(Thereupon, at 12:30 o'clock p. m., on Wednesday, June 1, 1955, a recess was taken until 2:00 o'clock p. m. of the same day.)

1463 Chicago, Illinois,
Wednesday, June 1, 1955,
2:00 o'clock p. m.

Court convened pursuant to a recess.

Present:

Mr. McCanna,
Mr. McKnight,
Mr. Pillote,
Mr. Allen,
Mr. Clement,
Mr. Voland,
Mr. Houghteling,
Mr. Bernat,
Mr. Kipnis,
And other Counsel.

1464 And thereupon the following further proceedings were had herein:

By the Clerk: Case on trial.
By the Court: Proceed.

CARL F. ALLEN, the witness, having been duly sworn to tell the truth, the whole truth, and nothing but the truth, testified as follows:

Cross-Examination (Cont.) by Mr. Kipnis.

At the bottom of page 60, the last question.

By Mr. Kipnis: (Reading.)

"Q. You did give an affidavit, do you remember that?
A. I did.
Q. And who talked to you above giving the affidavit?
A. I am not sure at the present time as to who it was. It was one of his attorneys.

Q. One of Mr. Mojonnier's attorneys?
A. Yes.
Q. Did he come down here or phone you?
A. He phoned me and I told him the outline of what that I would like for him to write up and he wrote it as I gave it to him. He took it down and made an out-
1465 line of it and then, because I was going to be in Mena, Arkansas, where they didn't have a stenographer or anything, it was typed and sent to me to approve and have it notarized and so on.
Q. And you did get it signed and you sent it back to him?
A. That is right.
Q. I assume you read it over?
A. I read it over.
Q. And you assumed everything it contained to be correct?
A. That is right.
Q. Since then you have found that there were a few errors, is that right?
A. There was one particular error.
Q. What was that?
A. That was on the machine having the solenoid valve and the float in it at the time that we saw it displayed.
Q. And in your affidavit you said that those elements were on the machine, and now you say you were mistaken when you made that statement?
A. That is right.
Q. In your affidavit you also say that:
1466 'In addition to the other parts, said filler machine contained a tank, a float, a timer and a solenoid for filling by the timed orifice principle.'
Now that you say wasn't correct? That wasn't on there at the time?
A. That is right. I was confused between that trip and the next trip.
Q. What do you mean by 'timed orifice principle'?
A. The amount of time which you hold an orifice open to let the amount of liquid flow through it that you want to.
Q. Is that new?
A. No, it is not new. Filling milk with that principle is new.
Q. Filling milk with that principle is new?
A. To a certain extent.

Q. You say also in the same affidavit that the filling machine demonstrated on June 10, 1953 was more complete than said pilot model which was seen by—"

By Mr. Kipnis: It says "client" but we meant "affiant."

By Mr. Kipnis: (Reading.)

1467 "—seen by affiant in February, 1953 and said filling machine also employed an electrical timer and solenoid in lieu of the cam operated orifice control?

A. They had told me that it would be that way.

Q. Yes, but—

A. But it still had the cam operated control on it in June but they didn't work it, which I assume was for that reason.

Q. Yes.

A. They didn't have any liquid in it.

Q. Now further along in your affidavit you say that Maurice J. Brasile did furnish at that time and place, that is the time you were shown the machine, furnish photographs and artist's drawing to said Frank G. Brooks and seven salesmen of Brooks Supply Company.

Now how many photographs did he furnish you?

A. I can't say exactly how many of these retouched photographs, as Plaintiff's Exhibit—

Q. 112.

A. Exhibit 112 that he furnished.

Q. He didn't furnish them at the time he showed you the machine, did he?

1468 A. It was within a week. It was on the same trip.

1469 Q. The same trip. And he didn't furnish them to the salesmen, did he?

A. He gave them to me to give to the salesmen because I am the sales manager and I represent the salesmen to him, not him direct to them.

Q. And when you say he furnished photographs, you are referring only to the photograph, Plaintiff's Exhibit 112, is that right?

A. That is all he furnished

Q. Yes.

A. One of our men had taken several photographs.

Q. Have you got those photographs?

A. I haven't got them, no.

Q. Do you know where they are?

A. They may be in Dallas. I couldn't say.

Q. Now, do you know who took the pictures?
A. Maurice Cole.
Q. Now in your affidavit you go on and say that Exhibit 98, which is now Plaintiff's Exhibit 112, is a true representation of the filling machine demonstrated to this affiant and other representatives of the Brooks Supply Company on June 10, 1953, as aforesaid with the exception that the base enclosure only had been changed by artist's
1470 drawing. Now that statement is not correct, is it?
A. It is according to how you terminate the base enclosure.
Q. For instance, you call the shelf—what do you call that?
A. That is part of the foundation and this is the collector table.
Q. The collector table, you think, is part of the base?
A. It shows here that it is welded to the base.
Q. And that is what you had in mind when you said that?
A. This spring and the dressing up of the tank.
Q. The dressing up of the tank?
A. Of the tank.
Q. I see. Well, in other words, that was not on the machine when you saw it and so this statement in here is not correct, is it?
A. It was on the machine when I saw it but it was retouched.
Q. It didn't look like it looked in that picture.
A. No, neither did the base."
1471 By Mr Kipnis: Then over to page 71, the third question:
"Q. You produced a folder marked Plaintiff's Exhibit 108.
A. Right.
Q. When did you get this folder from Mr. Brasile?
A. I believe it was in June of 1953.
Q. How do you fix the date?
A. Because it was at the time that we were ready to make the announcement that we had his fillers for sale because the discussion came up that why would we advertise the Mojonnier-Dawson filler if we were going to sell a filler that was manufactured by U. S. Filler Company.
Q. So you got this circular, Plaintiff's Exhibit 108, from Mr. Brasile in June of 1953. Is that the best date you can fix?
A. I believe that is right.

Q. And you got about how many?

A. About two bunches of them, and I would imagine that there was about a hundred to the—that is, they were wrapped in packages and I would say there were about a hundred to the package.

Q. And of course they were sent to you for use in selling the CP machines?

1472 A. They weren't sent to us. I picked them up in his office.

Q. And what were you going to do with them?

A. Distribute them to our trade.

Q. And you did distribute them to the trade?

A. We did.

Q. And that distribution was made after June 10, 1953, is that right?

A. That is right."

By Mr. Kipnis: That is all.

1473 By Mr. McCanna: I wish to read into the record, your Honor, some of the cross examination by Mr. Kipnis of this witness, Mr. Allen, which Mr. Kipnis omitted in his reading.

If you will please turn to page 30.

By Mr. McCanna: (Reading.)

"Q. About how many times a month did you call Mr. Brasile for service?

A. For service, we didn't call Mr. Brasile very often. We were usually talking to him and any questions that we had in mind, or anything regarding service, we discussed during our regular conversations, which was anywhere from—you might say, once to three or four times per week."

By Mr. McCanna: Will you now turn to page 34, the last question:

By Mr. McCanna: (Reading.)

"Q. Well, in the Mojonnier—in other words, with this machine shown in Exhibit 113, it was Mr. Brasile's hope that he could use it—that one operator could more efficiently operate it; that is, turn out more cartons per minute. Isn't that right?

A. It wasn't exactly given to me to understand that one operator could operate it inasmuch as the op-

1474 erator would have to drop, individually, the carton into the machine and the machine would be too long for the same operator to reach and take off the other cartons.

Q. Well, didn't he suggest the possibility of putting in a table over here to the right?

A. No, that was never mentioned.

Q. It was not mentioned?

A. No, neither was a conveyor of any type, or anything to convey the bottles away.

Q. Was anything mentioned—but the mechanism was for moving the cartons, wasn't it, after they were placed between these perpendicular members?

A. Yes, that is, on the original machine, they were trying to push the cartons.

Q. Which one are you referring to?

A. The one that I saw in February.

Q. And here, they have mechanism for doing it?

A. That's right. I explain that this photograph has had many changes.

Q. That's Plaintiff's Exhibit 113, is it not?

A. This photograph, Plaintiff's Exhibit 113, has had many changes from the machine as I first viewed it in the machine shop.

Q. In February, 1953?

1475 A. In February, 1953.

Q. When you say the photograph, you mean the machine shown in the photograph; is that correct?

A. That's correct.

Q. The photograph as it is has not been changed, has it?

A. No, that's the only photograph that I have.

Q. And that photograph correctly shows the machine when you saw it in June of 1953?

A. Correct.

Q. Now, this circular, Plaintiff's Exhibit 99, shows I believe you testified, the type of machine you bought from U. S. Filler Equipment during the time you were buying from that company; is that correct?

A. That's right.

Q. Is that the CP model?

A. That's what we term the CP model.

Q. Did you also buy from U. S. Filler a DP model?

A. No, sir.

Q. This is the only model you bought?

A. The one that is shown in this picture, yes, sir.

Q. Now in this machine shown in the circular, Plaintiff's Exhibit 99, in operating it, the operator takes a carton, breaks it open by the breaker mounted on the

1476 machine to the left; is that right? Is there a breaker there—some mechanism for breaking the carton open?

A. He inserts it into a holder and then by exerting pressure at the right point, opens the carton.

Q. Yes. Then he physically takes the carton and moves it under the nozzle; is that correct?

A. He raises it.

Q. Manually?

A. Yes, he manually raises it.

Q. And then at the same time, manually pushes it up against the switch; is that right?

A. That's right.

Q. And that actuates the solenoid and the timer and then the carton is filled with milk?

A. Right.

Q. Now, after it is filled with milk, doesn't the operator then again pick it up by hand and move it over to a heating station?

A. Right.

Q. He sticks it under the heater?

A. Correct.

1477 Q. And after it is heated, doesn't the operator once again take the carton filled with milk over to the stapling machine?

A. No.

Q. Is it stapled right there?

A. Right.

Q. It's a three-step operation, in other words; is that correct?

A. It is according to where you started.

Q. Well, I mean first you break open—

A. There are two basic operations which we agree on. One is filling; one is sealing.

Q. Also breaking the carton open?

A. That is done automatically as it goes under the filler.

Q. But it is an operation?

A. It is a continuous operation. If you say I'm going across the street, you are not going to say I'm going out to the street and step down and go across the street; you just say I'm going across the street."

By Mr. McCanna: Now, turn to page 79, the fourth question from the top:

1478 "Q. But he did intend that the carton would be dropped in place and that the conveyor mechanism

would carry it first through a breaker, or opener, then under the filling spout, then over to the heater and then the stapler?

A. He told me that was the way he expected it to work; however, he originally told me that he expected it to work with a pusher paddle and it didn't work so I had no reason to believe that this would work."

1479 By Mr. McCanna: Then Mr. Kipnis said in a question:

"Well, I think that is correct, Mr. Allen."

By Mr. McCanna: Now please turn to page 42, the first question:

(Reading.)

"Q. Now, you spoke of a filler. When you speak of a filler, do you mean the entire machine as shown in Plaintiff's Exhibit 99?

A. We use practically the same terms that they use. They call the whole machine a filler.

Q. Yes. Now, what do you call the mechanism that does the filling of the carton? You call that the filling mechanism, do you?

A. It could be stated as filling mechanism.

Q. I just wanted to understand the terms.

So, the mechanism which is actuated by the switch and which causes the carton to be filled, including the tank, is what you call the filling mechanism; is that right?

A. Right.

Q. And is it your understanding that the entire machine is patented? Was that your understanding?

A. Right.

1480 In fact, we were never told that it was patented, but I just assumed that anyone with an idea revolutionary and as much in demand would have had it patented.

Q. Did you ever discuss this question of patenting the machine, or whether it was or wasn't patented, with Mr. Mojonnier?

A. No. We weren't buying the fillers from Mr. Mojonnier.

Q. You are buying them from Mr. Mojonnier today, aren't you?

A. Right.

Q. From the Mojonnier-Dawson Company?

A. Right.

Q. You remember when you started buying them from the Mojonnier-Dawson Company?

A. It would be in July or August, to the best of my knowledge, of 1953.

Q. Well, I have an exhibit here that Mrs. Brooks gave me, which I will show you, and perhaps it will help you refresh your recollection.

I show you a check dated July 3, 1953, of the Brooks Supply Company—I should say a photostatic copy of the check—and the original was given to me by Mrs.
1481 Brooks yesterday and it is a sight draft for $1,402.50, given to Mojonnier-Dawson Company in payment of the first machine purchased by your company. Would that be about right, July 3, 1953, when you made your first purchase of a Mojonnier-Dawson machine from that company?

A. I couldn't answer that offhand. I will still have to say it was along in July or August.

Q. Of 1953?

A. Right.

Q. And when Mr. Brasile showed you the machine, shown in Plaintiff's Exhibit 113, and that was in June of 1953, he told you, didn't he, that his main purpose was to improve what he called the movement—is that what he called it?

A. I do not recall.

Q. You don't remember his calling it the movement?

A. No.

Q. He did explain to you, however, that what he was trying to do was to improve the way the cartons were fed along the machine so as to speed up the filling; isn't that right?

1482 A. The principle of the operation of the filler, or his principal desire to obtain from this filler, was less manual power and perhaps at the same time, fill faster, as he explained it to me.

Q. That was supposed to be what you refer to as an automatic machine?

A. That's right; the elimination of manpower would make it more automatic, or make a motor do the power.

Q. As I recall your testimony, you first saw the genesis of this machine, shown in Plaintiff's Exhibit 113, in February of 1953?

A. That's right, I think.

Q. Who was there at that time?

A. Maurice Brasile, Jack Richardson, and an employee

of the machine shop that had been working on the machine. There were several other people in the building, of course.

Q. Well, was Mr. Lewis there?

A. No.

Q. And was Mr. Brooks there?

A. No.

Q. Now, then, you saw it again. Do you know about when you saw it for the second time?

A. Oh, I would say a couple or three months later.

1483 Q. That was about May of 1953?

A. In fact, I made a trip on the average of once a month from the time we signed our contract until the termination of our contract, when U. S. Filler terminated the contract. Up until that time, we would average one trip a month to Woodstock to keep up on developments, to get our accounts straightened out, to try to smooth over any differences, etc. It seemed like our account was always being fouled up.

Q. I see. And on that second occasion when you saw the machine, was Mr. Lewis there then?

A. No, sir.

Q. Do you recall who was there at that time?

A. Mr. Brooks, Maurice Brasile and myself and I am not sure whether Jack Richardson was there at the time or not.

Q. On the third occasion that you saw it at this meeting in June, 1953—that was the third occasion on which you saw this machine; was it not?

A. That's right. And at that time, it had been brought over to the office; it had been brought out of hiding.

Q. Yes, and was Mr. Lewis there at that time?

A. No, sir.

1484 Q. You were there?

A. Right.

Q. And Mr. Brooks was there?

A. That's right.

Q. And who else?

A. Six of the other employees.

Q. Can you give me their names?

A. Lloyd Kidd, John Ball, Kermit Eisert, Morris Cole, Frank Isbell and Frank Brown."

By Mr. McCanna: Now please turn to page 47, the second question:

By Mr. McCanna: (Reading):

"Q. I see. Now, this machine—this photograph about which you have testified is an artist's drawing; isn't that correct?

A. It is a touched up photograph. Part of it, as the artist and Mr. Brasile explained to me, was from the original photograph and then, they added—drew in—what he wanted to make it appear that it was going to be when completed, what the finished product was hoped to appear.

Q. Now, can you point out the parts that were drawn in by the artist?

A. We can easily find those by comparing Exhibit 1485 112 with Exhibit 113.

Q. The parts that appear on Exhibit 112 and are not shown on Exhibit 113 are the parts that the artist drew in: is that not correct?

A. I assume that is correct, yes.

Q. After you had that meeting in June of 1953, did you go back to Joplin that week, or how soon after that?

A. In June of 1953?

Q. Yes.

A. I did not.

Q. How long did you stay in Woodstock?

A. About a week.

Q. You had other business to transact that you took care of?

A. Some.

Q. Now, after you got back to Joplin, do you recall Mr. Brasile telephoning you about an Ilreco filler?

A. Offhand, I do not.

Q. There was an Ilreco filler on the market, wasn't there?

A. There had been sometime prior to that.

Q. Yes. And that was for filling nested type containers, wasn't it?

1486 A. That's right.

Q. And don't you recall Mr. Brasile calling you, telephoning you, and telling you that the Ilreco filler might be made to fill crown type, or gable type carton?

A. No, sir.

Q. You don't remember that?

A. No, sir. I don't recall ever having discussed it with him.

Q. Did you solicit this order, shown in Plaintiff's Exhibit 100? Can you tell me who took the order?

A. Robert Mort.
Q. Mr. Robert Mort?
A. Yes, sir. He was our representative.
Q. Yes. Well, doesn't this order, in fact, cover this so-called reconstructed, or remodified Ilreco filler?
A. No, sir.
Q. Which was to fill the gable type carton?
A. It couldn't possibly be tied with such a connection because we had never been offered the sales and distribution of an Ilreco filler.
Q. About that time, you were having trouble getting deliveries, weren't you?
1487 A. We were always having trouble getting deliveries from the time we started in operation of this agreement."
1488 By Mr. McCanna: Now, please turn to page 50, at the top:
(Reading):
"Q. And as I recall in Mr. Brooks' testimony, sometime around that time, or shortly after that, you had quite a few machines on order and couldn't get deliveries.
A. That's true.
Q. He said, I think, some twenty-one or twenty-five?
A. I would say approximately that, maybe not quite that many. However, during that time, we had so many on order, I contacted Mr. Mojonnier and Mr. Mojonnier said, 'We have shown a steady increase in our production. We are equipped this month'—that was in May, I believe —'We are equipped to produce fifty machines and we have enough material and all on order to produce a hundred machines for the next month.'
Q. Do you recall when that conversation was?
A. I can't say exactly, but it was either of three months. It was either April or March or—it was April, May or June, along in one of those three months.
1489 Q. I see. Did you go to see Mr. Mojonnier when you were there in June of 1953?
A. Yes, sir.
Q. And you saw this machine?
A. Yes, sir. I had other business to transact over there. In fact, we had been making purchases from Mr. Mojonnier practically ever since he has been in business for himself.
Q. Yes. And at that time when you called on Mr.

Mojonnier, you discussed this matter of getting CP machines?

A. That's right, getting delivery.

Q. Getting delivery. And did you then discuss your relations with Mr. Brasile?

A. No, sir.

Q. And I assume you told him about the machine you had seen?

A. I did not.

Q. You didn't teh him about that?

A. No, sir.

Q. When was the first time you told him about that?

A. In July.

Q. Of 1953?

1490 A. Right.

Q. Just about the time you bought the first machine?

A. At the time, Mr. Lewis politely informed us that he didn't care about whether he did business with us or not, or maybe not in so many words, but he left that impression with us.

Q. Well, Mr. Brooks fixed the date of that meeting as July 29, 1953, or thereabouts. I think he said he was in Detroit at that time.

Now, right after your meeting with Mr. Lewis, you went over to see Mr. Mojonnier and made arrangements to buy the machines from him; isn't that right?

A. That's right.

Q. Now, you must have made arrangements to buy the machines from him prior to July 3, because he shipped you a machine on that date.

A. I couldn't say we made arrangements with him to buy on open account, or such as that, but in a telephone conversation with Maurice Brasile, Maurice told us if we could get fillers any faster than he was shipping them to us to go ahead, or words to that effect.

Q. Yes.

1491 A. But as far as actually making arrangements, we stuck to our contract as long as we could, not that we were getting anything out of it—I mean not that he was giving us any benefit or any help as far as service and sales were concerned. He did—let me add this: He did make arrangements that the fillers would be shipped from Mojonnier-Dawson sight draft to Brooks Supply Company for the amount of money agreed upon between

Maurice Brasile and Mojonnier and that the difference between what Mojonnier was charging U. S. Filler would be applied to their account. That was my understanding.

Q. And pursuant to that, did Mojonnier-Dawson Company ship you some machines?

A. Not until that final agreement was made.

Q. After you had your meeting with Mr. Lewis?

A. No, I didn't say that. I said before the meeting, when Maurice Brasile was giving us the runaround and making all kinds of excuses, telling us the machines were shipped when we would check and find out they had not been shipped, promising us delivery on a certain day and causing us to make commitments, which we couldn't

1492 fulfill. Then, we discussed it with Mojonnier and with Maurice and made the arrangement that Mojonnier would ship them for the U. S. Filler account direct to us sight draft for the amount we had been paying U. S. Filler; the remittance would be made to Mojonnier-Dawson and the difference between what they had been selling them to U. S. Filler would be applied to U. S. Filler's account.

Q. That was—do you know when that arrangement was made?

A. I can't say for certain, but I imagine it was prior to this check to which you refer that was in payment for a filler.

Q. Well, now, you met Mr. Lewis for the first time at that meeting in the latter part of July?

A. First, last and only time, and as far as I am concerned, it can still be the last time.

Q. You feel that way about Mr. Brasile too, I take it?

A. Not exactly. Maurice has likable features.

Q. But he caused you a lot of annoyance?

A. That's right.

Q. And caused you a lot of expense?

A. That's right.

1493 Q. And you lost a lot of money because of his inability to keep his delivery schedule?

A. That's right, but if Maurice would stick to the truth and live up to what he says, I have very great respect for him as a man and as a salesman.

Q. Now Mr. Allen, when was the first time you were told that the machine Mr. Brasile is now selling fringes the Mojonnier patent?

A. I was never told that."

By Mr. McCanna: Now please turn to page 55—or, I will read the last question at the bottom of page 54:

By Mr. McCanna: (Reading.)

"Q. Did you tell him about this order that you sent up there?

A. Later, we did. All he asked us about was the machine and I wouldn't lie about it to anybody.

Q. And did you tell Mr. Mojonnier about this order Plaintiff's Exhibit 100?

A. We did not because we did not have the contract with Mr. Mojonnier; our contract was with U. S. Filler Company.

Q. When did you make this contract with Mr. Mojonnier?

A. We never made a contract with Mr. Mojonnier.

1494 Q. Did you have an understanding of some sort?

A. We buy some of his products; we have no contract or agreement.

Q. Did you tell anybody else connected with Mojonnier-Dawson Company about this machine shown in Plaintiff's Exhibit 113 before you spoke to Mr. Mojonnier personally about it?

A. I did not.

Q. In your testimony, I believe you testified that this agreement, Plaintiff's Exhibit 98, describes the Mojonnier-Dawson filler in detail, or something to that effect. Will you look through it and find out wherein a reference was made to a Mojonnier-Dawson filler? I can't find any reference to it in there.

A. I didn't say that it—what do you mean? Do you mean that it specifies specifically Mojonnier-Dawson?

Q. Yes.

A. It doesn't, no. The only thing that it specifies was that the attached brochure that was supposed to have been attached.

Q. But wasn't?

A. No.

Q. And you never saw the brochure until after

1495 you signed the contract?

A. That's right."

By Mr. McCanna: Now please refer to page 65, the last question:

By Mr. McCanna: (Reading.)

"Q. Yes. Did Mr. Brooks see you help crate the machine for shipment to Ex-Cell-O Corporation?

* * * * *

"By the Witness: I can't tell you what he saw and what he didn't see.

Q. Well, was he there at the time?

A. He was in Woodstock at the time.

Q. Was he at the plant at the time?

A. Part of the time. I can't say he was there all the time.

Q. You testified, as I recall, that when you were in Woodstock on one of your trips, there was much sketch work being done and discussion of drawings. How do you know that?

A. Because I had been loaned a closing unit to help pass the CP filler in the State of Mississippi.

Q. What do you mean by that?

A. So that it could be closed without the aid of the fingers.

1496 Q. Without the aid of the human hand, you mean?

A. That's right.

Q. I mean without touching the mouth?

A. Without touching the lips. When I returned this and asked for six more, after it had been okayed by Mr. Whitehead, Director of Milk Control in Mississippi, to Woodstock, they agreed to have six of them ready for me Friday of that week. When I returned for them, they said they could not ship them out; that Mr. Lewis had impounded all the drawings, closures and everything pertaining to this machine and they could not do anything about it.

Q. You never saw the drawings?

A. No, sir.

Q. Who did you talk to?

A. I talked to Maurice; I talked to Blum; I talked to Jack Richardson.

Q. Those were the only people you talked to?

A. They were the only ones that had charge there.

Q. Yes. And that was when; after the first meeting with Mr. Lewis?

A. Right. I saw Jack Richardson with the drawings and perfecting drawings.

Q. But you don't know what they showed?

1497 A. The only drawing that I paid much attention to was an opener and closing unit, but I didn't go into it in detail.

Q. Now, you said Mr. Brasile was interrogating small, independent manufacturers, or workmen; is that right?

A. That's right.

Q. Was that at the same time when you were there?

A. That was on the same trip.

1498 Q. You didn't hear the conversations?

A. No. He told me, however, that the one that he was interrogating—

Q. Who told you?

A. Maurice.

Q. In whose presence?

A. I believe there were just he and I.

Q. Where?

A. In his offices. That is on Lake Street.

Q. That was all after your first meeting with Mr. Lewis in July of 1953; wasn't it?

A. I am not sure which meeting—no, I believe it was in June. Wait a minute. I am almost positive it was in June.

Q. How do you know?

A. Because in July, we didn't spend too much time up there. We were made to feel that we were not wanted.

Q. But it might have been in July?

A. I am sure it was in June.

Q. Before you met Mr. Lewis?

A. Yes, sir.

Q. And you also spoke about Mr. Brasile discussing the different spinners, prices on floats and tanks. 1499 Did you hear this discussion?

A. Part of it.

Q. Who were the people he was discussing it with?

A. I don't know.

Q. When was that?

A. In June.

Q. Of what year?

A. 1953.

Q. Where was it?

A. In his office on Lake Street in Woodstock, Illinois.

Q. Who was present at that time?

A. Maurice Brasile, the man with whom he was holding the conversation, and myself.

Q. He was just sitting there and you overheard him; is that it?

A. I was standing there admiring the work that this

man had brought in, the sample that he had brought in of a float and a tank, showing the float valve.

Q. Now, you didn't know whether these parts were going to be used as replacement parts, or as parts for the Mojonnier-Dawson machines, or some other machine; did you?

1500 A. I was led to believe and was told that they were trying to get the cost to where they could manufacture machines similar to the Model CP that Mojonnier-Dawson was building and that it was fixed up so that they could manufacture this machine and put it on the market for approximately $750.00 to $800.00.

Q. Who told you that?

A. Maurice Brasile.

Q. When?

A. In May or June of 1953.

Q. How do you fix the date?

A. Because it was either when we were up there at the sales meeting or the meeting before when we were discussing how soon that the machines would be available.

Q. Which machines would be available?

A. The ones that he was contemplating manufacturing, the machine, Exhibit 113, and the one that we had discussed that he never did show me and I never did see the drawings of, which would be the manually operated model. In fact, he even called me on the phone and asked me to cancel all the orders we had placed for Mojonnier-

1501 Dawson machines and enter orders for his machines.

Q. Was that at the time you couldn't get delivery on the Mojonnier-Dawson machines?

A. It was the time that he wasn't making delivery.

Q. Yes. Those machines that you are talking about—they are the ones that were cam-operated; is that right?

A. The machines I am talking about were the CP model, Mojonnier-Dawson fillers, which are not cam-operated, but are electrically timed and solenoid-operated.

Q. The ones that Mr. Brasile was telling you that he was building—they were to be cam-operated?

A. They were not to be cam-operated because you could not build a machine operated with a motor and a cam, etc., for that price and make any profit out of it.

Q. Do you know whether you can build a machine that is solenoid-operated like the CP machine is at that price?

A. I do not know, no. We are not in the manufacturing business.

1502 Q. In those discussions though, you did discuss, as I recall your testimony, as to how to compensate for wear on the cam operated type valve?

A. He told us we wouldn't have to worry about it."

By Mr. McCanna: Please turn to page 72. There are only several more pages, your Honor. This was cross examination.

By Mr. McCanna: (Reading.)

"Q. You are familiar with these models of the Mojonnier-Dawson filler shown in the circulars, marked Plaintiff's Exhibit 1, 2 and 3, are you not? You have seen these before?

A. I am familiar with this literature."

By Mr. Kipnis: If your Honor please, they are irrelevant. They are some documents that were attached to the affidavit of Mr. Mojonnier, as I recall, and I asked him some questions about that, but we are not going to offer them here. As far as I can see they are irrelevant.

By Mr. McCanna: If they were attached to the Mojonnier affidavit, you mean at the time of the motion to dismiss?

By Mr. Kipnis: Yes.

By Mr. McCanna: Then they are in the record 1503 in this case.

By Mr. McCanna: (Reading.)

"Q. You have seen those before?

A. I am familiar with this literature.

Q. But you never sold that type of machine, did you?

A. No.

Q. Did you sell these Models: Model BP, Model AP, and Model BA?

A. We have sold the Model BP and we have sold the Model AP.

Q. Just one or two?

A. A few.

Q. Do you know when you made the sale; during what year?

A. I would say 1953, 1954 and 1955.

Q. Was it before you sold the CP machines, or after?

A. We started selling CP machines in 1952.

Q. So, these came afterwards?

A. It would have to. 1953, 1954 and 1955 comes after 1952.

Q. Mr. Allen, I show you photograph marked Plaintiff's Exhibit 4—"

By Mr. McCanna: That would also be in this earlier Mojonnier affidavit?

1504 By Mr. Kipnis: Plaintiff's Exhibit 4, I think, is a photograph that was taken of the machine by someone else, and I believe the witness couldn't identify it. Is that right?

By Mr. McCanna: We didn't have any Plaintiff's Exhibit 4.

By Mr. Kipnis: The court reporter made a mistake.

By Mr. McCanna: I will rephrase that.

By Mr. Kipnis: The witness couldn't identify it.

By Mr. McCanna: I will rephrase that question:

By Mr. McCanna: (Reading.)

"Q. Mr. Allen, I show you photograph marked Defendant's Exhibit 4. That's the photograph, is it not, of the machine as it appeared when you saw it on June 10, 1953?

A. I cannot say."

By Mr. Kipnis: Your Honor, I object to any questions relating to Defendants' Exhibit 4 because the witness couldn't identify the photograph.

1505 By Mr. McCanna: You asked these questions on cross examination.

By Mr. Kipnis: That doesn't make them relevant here.

By the Court: What is the relevancy of this? It seems to me we are going into a lot of repetitious matter of no consequence anyhow.

By Mr. Kipnis: That is why I omitted it, your Honor.

1506 By Mr. McCanna: Mr. Kipnis has some kind of an idea, I don't know exactly what it is myself, about Brooks and Allen—

By the Court: If he doesn't know and you don't know, I assure you I am not going to try to find out.

By Mr. McCanna: I will be glad to end this here because we are right at the end of the deposition, your Honor.

By the Court: All right.

By Mr. McCanna: We will close for the plaintiff.

By Mr. Kipnis: Does the plaintiff rest now?

By Mr. McCanna: Except for offering some exhibits, I think, that may not have been offered, according to the Reporter's notes.

I would like to offer all the exhibits that I have identi-

fied here, and I believe that these depositions should be marked for identification.

By the Court: You have read them.

By Mr. McCanna: All right, sir.

By the Court: You have read the depositions.

1507 By Mr. McCanna: Plaintiff rests.

Thereupon the plaintiff rested its case.

* * * * *

1593 And thereupon the defendants, U. S. Dairy Sales Corporation, Purity Pack Corporation, Milk Container Equipment Corporation, Maurice J. Brasile and Eugene Blum, to maintain the issues on their part, introduced the following evidence, to wit:

By Mr. Clement: I would like to call Mr. Deletzke.

NORMAN E. E. DELETZKE, called as a witness on behalf of the Defendants, having been first duly sworn, was examined and testified as follows:

Direct Examination by Mr. Clement.

Q. What is your full name?

A. Norman E. H. Deletzke, D-e-l-e-t-z-k-e.

By the Court: Norman?

By the Witness: E. H. Deletzke.

By Mr. Clement:

Q. How old are you, Mr. Deletzke?

A. I am forty-six.

1594 Q. What is your occupation?

A. I am an attorney.

Q. Mr. Deletzke, I will ask you to keep your voice up as much as you can, please, so we can all hear.

Where is your office, Mr. Deletzke?

A. 10 South LaSalle Street, Chicago, Illinois.

Q. Would you please state what education and experience you have had which qualifies you to advise the Court in connection with mechanical and engineering and patent matters, particularly such matters as are involved in this present patent suit?

A. My education includes a mechanical engineering training at the State University of Iowa, at the close of which I received a Bachelor of Science degree and I did

graduate work in mechanical engineering, for which I received a Master of Science degree at State University of Iowa and the regular law school training at the close of which I received a J. D. degree, Juris Doctor.

By Mr. Voland: Would you please try to raise your voice a little bit more, Mr. Deletzke?

By the Witness: All right.

1595 By Mr. Clement:

Q. Do you specialize in any particular form of practice?

A. Yes. I specialize in patent practice.

Q. And you are admitted to practice before the Patent Office?

A. I am, in the United States and in Canada,

Q. What experience if any have you had with structures and engineering problems such as are involved in the time control dispensing devices which are concerned in this patent suit?

A. For the period of 1936 to 1952, I was the patent counsel for the Cherry-Burrell Corporation, Chicago, Illinois.

Q. How do you spell that?

A. C-h-e-r-r-y—B-u-r-r-e-l-l Corporation and I believe I am correct in saying that they are probably one of the world's largest manufacturers of dairy machinery for use in processing dairy products.

Q. In that connection, would you have had occasion to work with inventors and engineers on equipment of the same general character as is involved in this

1596 suit?

A. Yes. That was a constant procedure in this particular position. The Cherry-Burrell Corporation were one of the larger manufacturers of milk bottle filling machinery. In fact, their factory at Milwaukee, Wisconsin, was devoted almost solely to the manufacture of milk bottle filling and capping machinery.

Q. And you had occasion to inspect and examine such machinery?

A. Yes. I visited that factory a great many times. I have worked with designing engineers and inventors in that factory and applied for patents on their various inventions, dealing with milk bottle filling machinery.

Q. Then you have filed, prepared and filed a number of patent applications on mechanisms of the same general character as is in this suit?

A. Yes, quite a number. I don't know just how many, but over a period of sixteen or seventeen years, it was a constant procedure of development and obviously we filed applications for patents on those inventions which appeared to be patentable.

1597 Q. In those years that you were with the Cherry-Burrell Company, were you exposed to the development of paper containers in the dairy industry?

A. Yes. I would say that during the entire period that I was with that company, the matter of the use of paper milk bottles by the dairy industry was a matter of constant consideration.

At the time when I first came with the company in 1936, the paper milk bottles were of relatively little concern. Most milk that was bottled at that time for the regular distribution, was bottled in glass bottles.

At that time, the paper milk bottle had not become popular. There were various factors which probably influenced the lack of popularity of paper milk bottles at that time, for the reason that at that time the dairy industry laid great emphasis on what was referred to as the cream line in the milk. That particular phase refers to the rising of the cream in the neck of the bottle so that the customer could see that there was considerable cream in the bottle.

1598 The processing machinery for processing milk such as pasteurizers, were designed so as to cause the cream to rise in the neck of the bottle in such a fashion as to give the maximum depth of cream.

As the homogenization process became more popular in subsequent years, the dairy industry discontinued emphasizing the cream line factor for the simple reason that in homogenized milk you do not have a cream line.

As the homogenized milk became more popular, it was then more feasible, in my opinion, to use paper cartons or receptacles for the bottling of milk for the reason that the housewife was no longer looking for the cream line in the milk bottle and obviously, in a paper bottle, you can't tell how much cream, if any, happens to be in the milk.

Q. Was there some difficulty initially in the construction of the containers, the paper containers themselves?

A. Yes. I think initially there was a great deal of opposition to the paper containers by the processers as well as by the customers, due to the fact that paper containers had a tendency to leak and could not be handled as readily in

the same fashion as they were accustomed to handling the glass bottles.

Q. Could you tell us briefly, Mr. Deletzke, the
1599 history of bottling in the dairy industry, starting with the time prior to the use of paper containers, but only very briefly.

A. Well, the development of the automatic bottle filling machinery obviously was preceded by the use of smaller machines, commonly referred to as hand fillers, in which a small quantity of milk, probably a few gallons of milk, would be dumped into a tank and filled from that tank through filling valves very much the same as are used today, into bottles, by the actuation of levers which would either raise the bottle against the valve and open the valve, or lower the valves against the bottles.

Obviously, at that time, most of the milk was filled into glass bottles. Though, even prior to my experience with the dairy industry, paper bottles were used in connection with certain kinds of products sold by the dairy of the more expensive class. I am referring now to the Seal Cone type of paper bottles.

Those bottles were used on regular bottle fillers of the same type on which glass bottles were filled. They were not popular in such a sense that they displaced the glass
1600 bottles, for the simple reason that they were appreciably more expensive.

Q. More expensive than glass?

A. Than glass, yes. Seal Cone bottles, as any paper bottle, can be used only once, while a glass bottle, depending on the particular locality in which the bottles are distributed, may be used 25 to perhaps even 50 times before it is broken or has to be replaced.

1601 Q. Was there a difference in the manner of activation of the filler with respect to glass bottles as against paper cartons?

A. Yes. In some machines, the paper cartons were filled without the use of the bottle to actuate the valves. I believe the Seal Cone Company, who were the manufacturers of the Seal Cone bottle, offered a machine which—

By the Court: What is that word, Seal Cone?

By the Witness: Seal Cone, yes.

By the Court: C-o-n-e?

By the Witness: Yes. The bottle is made like a cone. It is a conical-shaped bottle with, as I recall it, a tin bottom

and a tin flange around the top to receive the bottle cap, with a plug very much of the type that you put in a regular glass milk bottle.

By Mr. Clement:

Q. You mentioned activation of the filling valve by the bottle itself. Could you explain that, briefly?

A. Yes. In the conventional type of bottle filler
1602 for use in connection with glass bottles, the bottle is—

I am referring now to an automatic type of filler which, we will say, is by far the most popular, the most commonly used. The bottle is supplied to the machine by an automatic conveyor, say in a continuous stream or line of bottles.

The bottles are automatically moved into filling position under the filling valve by what is referred to as star wheels, conveyor elements. The bottle is activated, positioned on a bottle lifter or pedestal.

As soon as the bottle has been thus positioned, the continuing motion of the filling table causes the lifting mechanism in many of the forms of fillers to engage a cam and that cam either raises or permits the raising of the bottle pedestal in a vertical direction until the mouth of the bottle engages a rubber gasket at the base of the bottle filling valve.

As the vertical motion of the bottle continues, the valve is opened and the liquid starts to drain out of the filler reservoir through the valve into the bottle. That filling
procedure continues while the bottle rides around the
1603 filling table of the filling machine, until it reaches, approximately reaches the discharge station.

At that station, that is, at that discharge station, the bottle pedestal is again lowered and as the bottle is lowered, the valve closes. As soon as the valve is closed, the bottle will have reached the discharge station and at that station, suitable cam mechanism will engage the bottle, push the bottle off of the bottle pedestal, usually onto a slide table, over which the bottle is slid by another set of star wheels and into the capping station.

Most of the automatic bottle fillers that are used today are actually a combination of bottle fillers and cappers and some form of a cap is usually applied to the filled bottle immediately after its removal from the pedestal below the bottle filling valve.

1604 Q. What causes the milk or other liquid to flow into the bottle?

A. In a gravity type of bottle filling machine, the milk flows into the bottle solely as a result of the pressure of the milk—we will say it is milk you are filling—or fluid in the reservoir.

Q. Is that the type of flow that is utilized in the plaintiff's machine, such as is exhibited in Plaintiff's Exhibits 37 or 39?

A. It would be precisely the same type as used in Plaintiff's Exhibits 37 or 39, or any of the other many varieties of gravity type bottle fillers. They all operate on the same principle of using a predetermined depth of liquid in the reservoir to cause the liquid to flow through the valve into the bottle at the desired speed so as to fill the bottle completely by the time it has reached the discharge station on the bottle filler.

Q. You are speaking now of automatic fillers. Were there any hand-operated fillers on the gravity principle to your knowledge?

A. To my knowledge all of the hand-operated fillers are of the gravity type. At least, those with which I am
1605 particularly familiar were. There may have been others, but at least the common variety of hand-operated fillers supplied to the dairy industry were of the gravity type. In other words, the type in which the liquid ran out of the reservoir, through the valve, into the bottles, solely by the influence of gravity.

Q. How was the level of liquid being filled into the bottle determined in such a hand-operated gravity form of filler?

A. In the hand-operated type, the level of the liquid could be determined by the operator by actuating the valve, which raised the bottle against the valve to open the valve. More commonly, however, it was determined merely by filling, permitting the bottle to stay below the valve until the bottle was completely full. That is in the hand-operated gravity type filler.

Q. What would happen if the bottle were maintained in filling position until it was completely full and then withdrawn? What would happen to the flow of liquid?

A. Well, in those type of machines to withdraw
1606 the bottle, you had to release the pressure on the valve, and that would automatically close the valve, while you removed the bottle from below the valve.

Q. In those which you described which actually depended upon the operator to determine the level to which the liquid was filled in the container, would you say the operator was doing in such an instance what is done in this device by the timer and the solenoid that operates the valve?

In other words, is this a mechanized version of that type you have described? Does the timer not determine the time of filling so that it is shut off after the container is filled to a proper level?

A. Well, I should say, I believe, that in the filling of bottles such as the Seal Cone type of paper bottle, or certain other receptacles, the operator with the hand type filler could watch and permit as much liquid as he liked to run into the bottle. But the common practice was not to fill a glass bottle in that fashion, by watching the level of the liquid. It was filled until it was full.

1607 But the operator certainly could determine with the hand type of filler, could fill the bottle half full, a quarter full or completely full, because he could shut it off, just like you would shut off the spigot on a water hydrant when you got ready to.

Q. When he did this, would he be accomplishing the same function as the timer and the solenoid on this device?

A. Precisely. He would be opening and closing the valve as he saw fit.

1608 Q. Now with respect to paper cartons, could the type of machine you just described in which the valve was opened by contact with the bottle itself be utilized successfully?

A. Oh, yes, indeed. That is the way it was used a great deal. In other words, the Seal Cone type of paper bottle was filled on the same type of machines on which the glass bottles were filled.

Q. Then the Seal Cone bottle had a structure as far as rigidity is concerned similar to the glass bottle, is that correct?

A. It had sufficient to actuate the valves. I wouldn't say it had the same rigidity, but due to the fact that it was a cone shape and seal, the heavily waxed paper body of several layers of paper, provided with a flange at the bottom portion usually made of metal or sometimes made of metal, and a metal flange at its mouth, the resulting Seal Cone bottle was sufficiently rigid to enable its regular use on the conventional type of milk bottle filler.

Q. Was that true of other types of paper containers?

A. No. The rectanguiar type of paper container, particularly the type with the completely opened top, could not be used to actuate a spring loaded valve
1609 of the type commonly found on the automatic milk bottle filling machines.

Q. What company makes that type of bottle, if you know?

A. Well, the—

Q. Are you familiar with the American Can form of bottle?

A. Well, I am familiar with American Can and with the Sealright, and of course, I think it is the American Paper Company, a subsidiary of Ex-Cell-O Corporation. American Paper Company manufactured the type of bottle that has been discussed here during the last few days.

Q. Is that known as the Pure-Pak bottle?

A. I believe that is known as the Pure-Pak bottle.

Q. What other types of flow were there other than the gravity? I don't believe you have mentioned any others.

A. Well, there were the strictly vacuum type of filling machine made by the Mojonnier Brothers Company here in Chicago, in which the milk was drawn from a receptacle by vacuum through a filling nozzle into the bottle until the bottle had been filled.

Then there are other machines which are the so-
1610 called gravity-vacuum machines, in which both the vacuum principle and gravity principle of filling are combined to hasten the filling of bottles.

Q. Are you familiar with machines which not only do the filling but also the forming of paper bottles?

A. Well, yes.

Q. Are there any such machines?

A. That do the forming and the filling? Well, yes, a machine manufactured by the Ex-Cell-O Corporation, which has been previously mentioned here, is such a machine which manufactures the bottle or forms the carton from a paper blank, waxes it, fills it and seals it.

Q. Is that a rather large, expensive machine?

A. Those are large and expensive machines. At least certain varieties. They do now have smaller varieties which are much less expensive, but the original machines that were put on the market were of a large capacity and are expensive.

Q. Are the American Can cartons made in the same type of machine that you just described?

A. Well, the American Can cartons are not made in the dairy. They are made at the paper companies or the can companies' factories, and come to the dairy pre-

1611 formed.

Q. Preformed?

A. Preformed.

Q. So they are in effect box manufacturers, in a sense, in that the carton is a small container?

A. The carton is a complete container ready for use, and the same applies to the very similar type of carton made by the Sealright Company. I believe they are a subsidiary of Oswego Falls Corporation.

Q. Mr. Deletzke, have you made a study of the prior art which has been cited by the defendants in this case, and have you studied the patent which is in suit, both the reissue and the original patent?

A. Yes, I have studied the patent in suit and the original patent and the file histories of the applications which matured in both those patents.

When you say did I study the art cited by the defendants, I believe I studied all of the art cited by all of the defendants.

1612 Q. Are you prepared to testify with respect to the patents which were designated as those upon which the defendants would rely in this case, the relatively small number of patents of that number?

A. Did you say was I prepared to testify on that?

Q. Yes.

A. Yes.

Q. Mr. Deletzke, I would like to discuss with you now the question of the possible invalidity of the claims of the patent in suit which are in issue, claims 1, 6 and 7 of the reissue patent 23,830.

I am directing these questions primarily to the possibility of lack of invention over disclosures in the prior art. In other words, we are now going to consider the question of possible anticipation by this prior art.

I would like to look briefly, first of all, at these patents, the ones which the defendants are going to rely upon, and which volume has been identified as Defendants' Exhibit 6. I believe the copy which your Honor has is the one which was so identified. It is in a looseleaf black book. I

1613 would like you to first look, Mr. Deletzke, at the Engels patent 2,542,239—

By the Court: I don't see the Reporter's mark on this. Do you want to put it on?

By Mr. Clement: Yes, I would like to, your Honor. I thought it was there.

I will ask the Reporter to mark this copy of the compilation of patents to be relied upon at trial by the defendants as Defendants' Exhibit 6 for identification.

(Thereupon said document was marked Defendants' Exhibit No. 6 for identification.)

By Mr. Clement:

Q. Now we are referring to the Engels patent, Mr. Deletzke, 2,542,239, which I believe is the second from the last in the book. Do you have that before you?

A. I have it.

Q. I am referring now particularly to Figure 1 of that patent, Mr. Deletzke. Could you tell me first of all what this mechanism is?

A. The Engels patent refers to a machine for de-
1614 livering measured quantities of dough to baking pans which ride along below the machine on a conveyor to carry the pans filled with measured quantities of dough to an oven.

Q. Does it also refer to batter, cake batter?

A. Well, when I say dough, the patent refers to material used in baking cakes and various other things, the type that are baked in commercial bakeries.

Q What is the element which is marked 20 in Figure 1 of this patent, Mr. Deletzke?

A. The element marked 20 is a supply hopper.

Q. A supply hopper?

A. Or tank or reservoir.

Q. What is the element 24 and element 22?

A. Element 24 is a valve stem. The element 22 is a valve element. The element 24 is in turn connected at its upper end or associated at its upper end with a solenoid 26 for actuating the valve element 22.

Q. When you say actuating, does that mean opening and closing?

A. By that I would mean to open and close the orifice or discharge opening at the bottom of the tank, supply
1615 tank 20.

Q. And what is the element 10, Mr. Deletzke?

A. The element 10 is the tank into which the material

is discharged from the supply tank 20, and from which in turn measured quantities of material are discharged through the orifice 14 as and when the valve element 16 is opened to open the orifice 14.

Q. How is that valve element 16 opened?

A. Valve element 16 is opened by a valve element actuator 18 which may be, as I recall, according to the specifications, either a pneumatic or electrical device, such as a solenoid, and the energization of the actuator 18 is in turn controlled by the timing mechanism disclosed in appreciable detail in Figure 4 immediately below Figure 1 of the Engels patent 2,542,239.

1616 Q. Briefly, what is the nature of this timing mechanism shown in Figure 4?

A. Briefly, the timing mechanism consists of electrical motor, I presume that is No. 222, gear reducer No. 224, and the power transfer mechanism consisting of the shaft 226, pinions and gears 228 and 230, which in turn transfer the rotary motion generated by the motor 222 to the shaft 206, which shaft 206 in turn is equipped with a series of cams used to actuate the control mechanism 134—no, 154, 153, and so on.

Q. And what do those control mechanisms do?

A. Those control mechanisms in turn control the action of the various solenoids, which in turn control the movement of the various valve mechanisms associated with the tank 10, from which the material is discharged through the orifice 14.

Q. Is the control of the element 18 established in that way?

A. The control of the element 18 is established in that way.

Q. What is 18?

A. 18 is the actuator of the valve, cut-off valve 16.

1617 Q. Is there a method of varying the time which the valve 16 is opened?

A. Obviously, since you have the gear reducer 224, and gear reducers very commonly are adjustable, by the adjustment of the speed of the pinion 228.

Q. I call your attention, Mr. Deletzke, to column 13 of this patent—

By the Court: Let's take a recess at this time until 2:00 o'clock.

(Whereupon a recess was taken in the above-entitled cause until 2:00 o'clock p. m. of the same day, Thursday, June 2, 1955.)

1619 And thereupon the following further proceedings were had herein:—

By the Clerk: Case on trial.

By the Court: Proceed.

By Mr. Kipnis: If your Honor please, may I state that the findings of fact will be typed and they will be here in a few minutes.

By the Court: Very well.

By Mr. Clement: Your Honor, we have a witness that I would like to put on. I would like to withdraw Mr. Deletzke for a few minutes. This witness has been under subpoena for some time.

By the Court: Is that agreeable?

By Mr. Clement: I would like to withdraw Mr. Deletzke for a few minutes and put on Mr. Dawson.

Mr. Dawson, will you take the stand, please?

LYNN SCOTT DAWSON, called as a witness at the instance of the Defendants, having been first duly
1620 sworn, was examined and testified as follows:

Direct Examination by Mr. Clement.

Q. Would you state your full name, please?

A. Lynn Scott Dawson.

Q. Where do you live, Mr. Dawson?

A. In Addison, Illinois.

By the Court: Speak a little louder, please.

By the Witness: Addison, Illinois.

By Mr. Clement:

Q. By whom are you employed, Mr. Dawson?

A. G. Barr & Company.

Q. And how old are you?

A. Forty-one.

By Mr. Clement: Your Honor, I am reminded that we are calling Mr. Dawson under the statute.

By the Court: Very well.

By Mr. Clement:

Q. Were you ever employed by or connected with Mojonnier-Dawson, Mr. Dawson?

A. Yes, I was.

Q. At what time was that?

1621 A. Well, I left there, it would be about four years ago.

Q. What was your position with that company?

A. Vice president.

Q. Vice president?

A. Right.

Q. When did you begin your association with that company?

A. Well, I don't remember the exact date.

Q. Approximately when, the year?

A. 1946 or 1947, I guess. I am guessing at it. I don't remember the date.

Q. Were you with the company from its date of organization?

A. Yes.

Q. What was the nature of your duties with the company?

A. In charge of sales.

Q. You were familiar with the products sold by the company, then?

A. Yes, that's right.

Q. Do you recognize these two devices, labeled Plaintiff's Exhibits 37 and 39, these two devices here as being two of the products of that company at the time you

1622 were employed or associated with them, either one of these (indicating)?

A. Yes, similar products, not exactly that. This is probably a later model than the one I am familiar with.

Q. Could you try to speak up just a little bit, Mr. Dawson?

A. I say, it looks very familiar. This is perhaps a later model than I am familiar with.

1623 Q. In any event, there were being sold devices closely similar to this device, Plaintiff's Exhibit 37? I am referring to this one that is nearest to you.

I might add that this tank has been added; this tank, numbered 16. I am referring only to the portion without this tank.

A. I believe so, yes.

Q. You know Mr. Albert Mojonnier, Mr. Dawson?

A. Yes, I do.

Q. Was he also connected with the Mojonnier-Dawson Company at the time of your association with it?

A. Yes.

Q. What was his capacity?

A. He was president.

Q. Do you have any recollection of a device similar to the one we have just been discussing, Plaintiff's Exhibit 37, being in the plant of the Mojonnier-Dawson Company prior to the time of the sales of this device being started?

A. Will you—

Q. Was there a model of this kind of a device at any time in the plant of the Mojonnier-Dawson Company

1624 prior to the actual selling of this device, if you recall?

A. There might have been a working model or an experimental model. It is, usually, I believe, made up prior to sale.

Q. You do recall a model of this type, of this general type of machine, being in the plant?

A. Yes, I believe so.

Q. Do you have any idea of the date that would be?

A. No, I don't.

Q. Would it have been in 1946?

A. I really can't recall.

Q. You don't have any recollection?

A. I don't remember.

Q. Did you actually sell this device as we have described it, that is similar to Plaintiff's Exhibit 37, yourself?

A. I believe I sold a few of them, yes, but my connections were mainly in the aerosol field.

Q. Wasn't this device used in the aerosol field also?

A. Well, as a different model, yes.

Q. What was it used for in the aerosol field?

A. For filling aerosol containers.

Q. Do you know whether or not this device was

1625 made the subject matter of a patent application?

A. Will you repeat that, please?

Q. I will rephrase it. Do you know whether or not there was a patent application filed on this device?

A. That I don't know.

Q. Do you know whether or not the devices which you have testified to as resembling Plaintiff's Exhibit 37 had a name plate on them?

A. Well, I don't remember on this type, on this 37.

Q. On any of the devices that you sold, was there a name plate, or that the company sold?

A. On the aerosol fillers, I had put the company name on some of the machines myself.

Q. How did you do that?

A. By sandblasting.

Q. Do you mean the Mojonnier-Dawson Company name?

A. Yes, it was the Mojonnier-Dawson Company, with an MD, as I remember it, in the center.

Q. Was there a name plate that was used by the company on any of the products of the company?

A. I don't remember whether there were or not.

Q. You don't recall whether or not there was a name plate on any of the products made by the company,
1626 the Mojonnier-Dawson Company?

A. No, I don't.

Q. Mr. Dawson, would you step down and look at Plaintiff's Exhibit 37 and see if you find a name plate on that device?

A. There is one on the leg.

Q. You you speak up, please?

Address the Court, please.

A. There is one on the leg.

Q. Does that refresh your recollection about a name plate? Examine it closely, will you, Mr. Dawson?

A. Yes. I remember that plate now.

Q. You may take the stand again, please.

1627 You say you now remember that name plate?

A. I remember the plate now, yes.

Q. Did you note the contents of this plate?

A. Not particularly, no. I noticed the emblem on it and the name of the company.

Q. Is there anything else on the plate?

A. I believe there is a model number and serial numbers.

Q. Anything else? Would you examine it again, Mr. Dawson, please.

(Witness stepped down from the witness stand.)

By the Witness: Yes.

By Mr. Clement:

Q. What do you find on it, Mr. Dawson?

A. Patent numbers.

Q. Roughly about ten or twelve, is that correct?

A. I didn't count them.

Q. Would you count them, please?

A. Yes. About twelve on there.

By Mr. Clement: Would you take the stand again, please.

(Witness resumed the witness stand.)

1628 By Mr. Clement:

Q. Do you recall whether or not a nameplate such as the one you just examined on Plaintiff's Exhibit 37 was applied to any of the products of Mojonnier-Dawson Company during your employment or association with that company?

A. Did you say do I remember that they were applied during my employment?

Q. Yes, sir. Did the products sold during the time of your association with the company carry such a nameplate?

A. I believe it did, yes.

Q. Did that nameplate include a number of patent numbers?

A. That I don't distinctly remember.

Q. You don't distinctly remember that?

A. No.

Q. Do you remember it at all?

A. No, sir, I don't.

Q. You don't remember it at all?

A. No, I don't.

Q. Do you remember a conversation with me approxi-

1629 mately—

By Mr. McCanna: I believe he is leading this witness.

By the Court: He is cross-examining him.

By Mr. Clement: I called him under the statute, Mr. McCanna.

By Mr. McCanna: He is not a party here.

By Mr. Clement: He was the vice president of the Mojonnier-Dawson Company during the period I am talking about.

By Mr. Clement:

Q. Do you remember a conversation with me at any time, Mr. Dawson, concerning a nameplate on the devices of the Mojonnier-Dawson Company?

A. I recall having a conversation with you, but I don't recall just what we talked about.

Q. You don't recall the substance of the conversation in any regard?

A. Not distinctly.

Q. Do you recall any of the conversation I had with you?

A. No, I don't.

Q. I am speaking of a conversation in person with you at lunch at the LaSalle Hotel in the Lotus Room. Do you recall that?

1630 A. I remember having lunch with you, yes.

Q. And who else was present?

A. I think Mr. Brasile was present, and another gentleman, I don't remember his name.

Q. What did we discuss, if you recall?

A. I don't recall.

Q. You don't recall at all what we discussed?

A. No, I don't.

Q. Do you recall having a telephone conversation with me within the last three months?

A. I had a telephone conversation. I am not sure it was with you, sir. I had a telephone conversation with someone from your office, I believe, but I am not sure it was with you.

1631 Q. Do you recall in this conversation that you were questioned about the possibility of appearing as a witness in this lawsuit?

A. No, not that far back.

Q. I am speaking of this telephone conversation within the last three months.

A. Oh, I think there were several telephone conversations.

Q. Were there any telephone conversations concerning your appearing as a witness in this lawsuit within the last three months with anyone in my office, or Mr. Voland's office?

A. I believe so.

Q. Was there any discussion at that time about the previous conversation had with you in the La Salle Hotel at this luncheon?

A. No.

Q. There was not?

A. Not that I remember, no, sir.

Q. Did you state in your conversation on the telephone with a party whom you are not able to identify that you did not want to be called as a witness?

A. Would you repeat that, please?

Q. Did you state in the conversation you had on

1632 the telephone within the last three months, with this party or parties whom you have not been able to identify, that you did not want to be called as a witness in this case?

A. I believe I did.

Q. Did you state that if you were called you would have to tell the truth about things that had been previously discussed at the luncheon meeting, or did you make approximately that statement?

A. No, sir, I don't recall making that statement.

Q. Mr. Dawson, are you related to any of the parties to this suit or principals in this suit?

A. Yes, I am.

Q. To whom are you related?

A. To Mrs. Mojonnier.

Q. In what way?

A. Brother.

Q. Mr. Dawson, at the time of this luncheon at the La Salle Hotel, did you tell me that there was a name plate applied to the filler mechanism that was produced by the Mojonnier-Dawson Company resembling Plaintiff's Exhibit 37?

A. I don't remember that I did. I did, as I stated before, I had sandblasted the names on the Electromatic
1633 filler and on the aerosol filler. I had done some of those myself.

Q. Did you tell me that there was a substantial number of patent numbers on that name plate?

A. I don't remember that I did, sir.

Q. Did you tell me that you had a conversation at one time with Mr. Mojonnier regarding those patent numbers?

A. I don't recall that I did.

Q. Do you recall such a conversation with Mr. Mojonnier?

A. No, sir.

Q. Do you recall telling me that Mr. Mojonnier indicated when you called those patent numbers to his attention, and you said to him that you felt that they did not apply to the machine, that Mr. Mojonnier said "Nobody ever bothers to check on those things"?

A. I don't recall saying that, sir.

Q. Do you now recall in this telephone conversation with this unidentified party that you said you would not want to repeat that, but you would have to tell the truth if you were asked those questions?

A. No, sir, I don't recall that.

Q. Mr. Dawson, do you recall having a conversa-
1634 tion within the last three weeks with Mr. Houghteling of Mr. Voland's office, a law office, Defrees, Fiske, O'Brien & Thomson?

A. Yes, I remember talking with Mr. Houghteling. I believe it was Mr. Houghteling. I talked to him just the other day.

1635 Q. Do you recall saying to him that if you were called as a witness in this lawsuit, that you did not believe that you would be able to remember anything?

A. No, I don't recall that.

By Mr. Clement: That is all.

By Mr. McCanna: No cross-examination.

(Witness excused.)

By Mr. Clement: Your Honor, I have one other witness that I would like to put on prior to putting Mr. Deletzke back on the stand.

By the Court: Any objection?

By Mr. McCanna: No objection, your Honor.

LUTHER DEMPSEY, called as a witness on behalf of the Defendants, having been first duly sworn, was examined and testified as follows:

Direct Examination by Mr. Clement.

Q. What is your full name, please?

A. Luther Dempsey.

1636 By the Court: Again, please?

By the Witness: Luther Dempsey, D-e-m-p-s-e-y.

By Mr. Clement: Would you raise your voice up as much as you possibly can so that we can all hear you, Mr. Dempsey.

By Mr. Clement:

Q. How old are you, Mr. Dempsey?

A. Thirty-nine.

Q. Where do you live?

A. 2936 West Palmer.

Q. By whom are you employed?

A. Rudd-Melikian.

By the Court: I can't hear you. Speak up, please.

By the Witness: Rudd-Melikian.

By Mr. Clement:

Q. What is the business of that company?

A. Coffee vendors.

Q. Coffee vending?

A. Yes, sir.
Q. What are your duties with that company?
A. Service manager.
Q. What does that involve?
A. Repairs, installation on the machines, on the
1637 equipment, trucks.
Q. How long have you been with the company?
A. Since August of 1954.
By Mr. Clement: Your Honor, I am calling this witness in connection with the deposition that was taken in Philadelphia with the Court's permission, shortly before the start of this lawsuit.
We then discovered that this machine, the exhibit in the court room at the present time, was a prior public use and sale of a device which we contend is substantially the same as the invention in suit. I would like to—
By Mr. McCanna: I don't admit that, your Honor—
By the Court: What is that?
By Mr. McCanna: I don't admit, your Honor, that it was a prior public use.
By the Court: I infer that that is your position.
By Mr. Clement: I would like to ask the Reporter to mark the machine which is now in the court room as
1638 Defendants' Exhibit 3 for identification.
(Thereupon said machine was marked Defendants' Exhibit No. 3 for identification.)
By Mr. Kipnis: Your Honor, I am presenting our proposed findings of fact and conclusions of law.
By Mr. McCanna: Your Honor, I would like to have the opportunity of a reasonable length of time to look this over and make some reply.
By the Court: How long do you think that would be?
By Mr. McCanna: Well, next Monday? I don't see that there is any hurry about it. We are right here in the middle of this.
By the Court: Well, I should think Monday would be all right. 10:00 o'clock.
By Mr. Kipnis: Monday at 10:00 o'clock?
By the Court: Yes.
By Mr. Kipnis: Will the record show that I served copies on counsel for the Brasile group and on Mr. McCanna of the proposed findings of fact and conclusions of law.
1639 By the Court: It may so show.
By Mr. Clement: If the Court please, I would like

to read this brief deposition and have Mr. Dempsey respond because he is familiar with this machine, and the witness was in the presence of such a machine and pointed out different parts of the machine at the time the deposition was taken.

Mr. Dempsey, I will hand you the original copy of the deposition taken in Philadelphia on Friday, April 29, 1955—

By Mr. McCanna: This witness isn't connected with this deposition, is he?

By Mr. Clement: I just explained, Mr. McCanna, that this witness is familiar with this machine, and that the witness in Philadelphia pointed to different parts of the machine when he gave his testimony. I am asking this man to respond and point to the same parts that were identified by the witness in Philadelphia.

By Mr. McCanna: That is a separate thing. The examination down there shows in the deposition what
1640 happened there, and if they want to examine this witness on the machine, it seems to me that is another matter.

By Mr. Clement: We are going to use this witness to demonstrate the operation of the machine after we have finished the deposition.

By the Court: Maybe you had better read the deposition in the usual way and see what we make out of it.

By Mr. Clement: Will you step down momentarily, Mr. Dempsey?

(Witness temporarily withdrawn.)

1641 By Mr. Clement: I was just about to ask the reporter to mark the deposition for identification as Defendants' Exhibit 43.

(Thereupon said document was marked Defendants' Exhibit No. 43 for identification.)

By Mr. Clement: This is the deposition of Mr. Khoren C. Melikian.

By the Court: How do you spell the first name?

By Mr. Clement: K-h-o-r-e-n C. Melikian, M-e-l-i-k-i-a-n.

By Mr. McCanna: I thought you were going to have an expert witness on this afternoon. I don't even have my copy of the deposition with me, but that is all right.

By Mr. Clement: Well, I don't have an extra copy.

By Mr. McCanna: Well, that is all right.

By the Court: Well, you go slowly.

By Mr. Clement: This is the deposition of Khoren C. Melikian, vice-president of the Rudd-Melikian Corpora-

tion, taken pursuant to notice served on counsel for
1642 defendant, dated April 26, 1955 and to order of the Court entered on April 27, 1955, at the Rudd-Melikian Corporation, 1949 N. Howard Street, Philadelphia, Pennsylvania, on Friday, April 29, 1955, commencing at 11:45 o'clock a. m.

The interrogation was carried on by Mr. William P. Cole of Philadelphia.

By Mr. Clement: (Reading.)

"By Mr. Cole: This deposition is taken in a proceeding in the United States District Court for the Northern District of Illinois, Eastern Division, captioned The Mojonnier-Dawson Company, a corporation, plaintiff, *vs.* U. S. Dairies Sales Corporation, a corporation, et al., defendants, under Consolidated Civil Action No. 54 C 277.

The deposition is taken pursuant to notice served on counsel for the defendant dated April 26, 1955, and to order of the Court entered on April 27, 1955.

Mr. Reporter, I hand you copies of the notice of the taking of the deposition.

KHOREN C. MELIKIAN, having been duly sworn,
1643 was examined and testified as follows:

Direct Examination by Mr. Cole.

Q. Mr. Melikian, will you state your full name and age, please?"

By the Court: Who is taking the deposition?

By Mr. Clement: Mr. William P. Cole.

By the Court: On behalf of whom?

By Mr. Clement: On behalf of the Brasile group of defendants.

By the Court: Yes, and it was pursuant to notice to whom?

By Mr. Clement: Pursuant to notice to Mr. McCanna and an order of Court entered on hearing before your Honor.

By Mr. McCanna: I was present, your Honor. It was that quick trip down there and—

By the Court: Well, I thought it was pursuant to notice to the defendants.

By Mr. McCanna: I would just like to have the privi-

lege of re-checking this. If I should want to put in some parts of this witness, or rather, the reading of this deposition, I would like to reserve that right. This is
1644 rather a surprise to us at this time. I did not have my copy with me.

By the Court: Well, you will have an opportunity, if you want to put in any parts that they do not put in.

By Mr. Clement: Your Honor is quite correct. There is a misprint in this deposition. It says "defendant" and should have said "plaintiff."

By the Court: Very well.

1645 (Reading):

"By Mr. Cole:

Q. Mr. Melikian, will you state your full name and age, please?

A. Khoren Cyrus Melikian, age 34.

Q. What is your occupation?

A. I am executive vice president of Rudd-Melikian, Inc.

Q. And what is the business of the Rudd-Melikian Corporation?

A. We are manufacturers of automatic dispensing equipment for hot and cold beverages, still and carbonated, coin-operated and non-coin-operated.

Q. And what are your duties in the company?

A. Well, today I am an administrative man as an officer of the corporation, but when we started out my professional training was that of an engineer.

Q. When did your company first sell coffee dispensing machines?

A. Well, we started to sell them right after we became a corporation, or a reasonable time thereafter.

I mean we became a corporation and then we started some development work, although development work
1646 was prior to that. I would say that we started selling units commercially some time in 1947.

Q. Will you describe briefly the coffee machine sold by the company at that time; that is, say, in the middle of 1947?

A. Well, the first unit we ever made was a powder machine, and that was—we abandoned that program that sold soluble powder products.

Then we went over to frozen liquid concentrates which we are using at the present time, and through a series of building units and developing them, why, we developed the

business up to this point, and it was in 1947 that we started really getting into commercial activities.

Q. What materials were dispensed in the machines that you sold in 1947?

A. Well, the units that we sold commercially?

Q. Yes.

A. The ones that were commercial were hot coffee, black, hot coffee with sugar, hot coffee with cream or hot coffee with cream and sugar.

Q. How was the cream dispensed in that machine?

1647 A. Well, the cream was dispensed as the other products, and that is we used a stainless steel vessel and we housed the commodity in this particular vessel and we attached from that vessel to a metering vaive that was electromagnetically operated by a solenoid with an adjustable port and orifice, and we measured by time the dispensing of the product and we measured a maintained head pressure.

I might say the most important thing about this whole concept of dispensing is that you must maintain a height, because if you have it at a lower—if you don't have it there it is a very critical point and you will not be able to get constant delivery of the product, and we measure in very small quantities. We measure in cc's. We measure five cc's and six cc's of concentrate of coffee, or eight cc's of sugar or eight cc's of milk or cream, and it is very critical that we be able to keep it within the fair tolerances of half a cc.

1648 Q. Then the cream dispensing equipment included a container for cream?

A. That is correct.

Q. It included a solenoid controlled valve?

A. That is correct.

Q. A timer?

A. That is correct.

Q. Under what impetus did the cream flow from the container to the valve?

A. Well, we used a gravity method and we maintained a constant head pressure by putting the cream container—I don't know how many inches it was above the solenoid valve, but I know that that must have been at least 14 inches, and that was a critical thing in the whole design.

Q. Now, Mr. Melikian, I am about to hand you a document which purports to be Rudd-Melikian packing and shipping ticket No. 1027.

Will you examine that document and tell me what it is?

A. Why, yes. This is a packing and shipping ticket which is actually a duplicate copy or a carbon copy of an invoice to a customer in Pittsburgh, Pennsylvania, and it is for 12 coffee machines that were shipped 1649 6-9—I cannot read the date here—because it is hand-written and it is not typed—with the serial numbers from serial number 69, 70, 71, 72, 73, 74, 76, 78, 80, 81, 82 and 84. And the price of the units were $625 apiece, and there were 12 units used.

Q. Now, were those—was that shipping ticket made up in the usual course of business?

A. Oh, yes. We do this on all accounts.

Q. What corporate officer was in control of the keeping of those records in 1947?

A. I was.

Q. And what was your title?

A. Well, among other things I was the treasurer of the company, and these were functions that I was directly responsible for."

By Mr. Clement: Then Mr McCanna says:

By Mr. Clement: (Reading.)

"By Mr. McCanna: Did the witness say that that invoice was 1947? I thought he said he couldn't read the date."

By Mr. Clement: Mr. Cole says:

By Mr. Clement: (Reading.)

"By Mr. Cole: He has not yet stated the date.

1650 By the Witness: I didn't say, sir.

By Mr. Cole: He has not yet stated the date.

By the Witness:

A. It looks like 6-9-47 on here, Mr. McCanna. It is very—it's written by hand. It's hard—sort of illegible.

By Mr. Cole: At this time I ask the reporter to mark the Packing and Shipping Ticket No. 1627, which the witness has just examined, as Plaintiff's Exhibit No. 1 for identification."

By Mr. Houghteling: At that point Mr. McCanna said:

By Mr. Houghteling: (Reading.)

"By Mr. McCanna: You better make that 'Defendant's.'

By Mr. Clement: (Reading.)

"By Mr. Cole: I beg your pardon. Defendants' Exhibit No. 1 for identification."

(Show Defendants' Exhibit 1 marked for identification.)

By Mr. Clement: (Reading.)

"By Mr. Cole:

Q. Mr. Melikian, I am now about to hand you a
1651 document which purports to be Rudd-Melikian invoice No. 1030, and I ask you what that document is.

A. This is an invoice to another—to a customer in Pittsburgh, Pennsylvania, which is the invoice for the Packing and Shipping ticket that I just examined.

Q. The shipping ticket, Defendants' Exhibit No. 1 for identification?

A. That is right, sir.

Q. Is it a—

A. And this one is typed and therefore I can read the date on this one clearer.

1652 Q. What is that date?

A. The date shipped is 6-9-47.

Q. Is there a reference on the invoice to the shipping ticket, Defendants' Exhibit No. 1 for identification?

A. Yes, it does. It refers to date of invoice. It says June 25th, 1947, and it refers to a packing and shipping ticket No. 1027, which is the one I just examined.

Q. Is that invoice a document prepared in the usual course of business?

A. Oh, yes. This invoice was prepared, I am sure, in conjunction with that packing and shipping ticket.

Q. And under whose control were invoices prepared and records thereof maintained at the date shown by that invoice?

A. Well, they were under my control. I was the treasurer of the company then, and I took care of all those accounting functions.

Q. Who was the customer to whom the machines identified in the two documents were sold?

A. The customer was known as—at that time, as Kwik-Kafe of Western Pennsylvania, and their
1653 address at that time was 901 Ridge Avenue, Pittsburgh, Pennsylvania, and this particular invoice was sent to the attention of L. F. Sylvester.

Q. Was the sale recorded in that invoice a sale in the usual course of business?

A. Oh, yes. Very definitely."

By Mr. Clement: Miss Reporter, I ask that the invoice, Rudd-Melikian invoice No. 1030, be marked as Defendants' Exhibit No. 2 for identification.

(Thereupon said document was marked Defendants' Exhibit No. 2 for identification.)

By Mr. Clement: (Reading.)

"Q. Now, Mr. Melikian, did the machines identified in Defendants' Exhibits 1 and 2 for identification contain and embody the features which you described to us earlier in your testimony?

A. Yes, sir, they did.

Q. Is there available for inspection a machine of that type?

A. Yes, sir, there is."

By Mr. Clement: At that time, they adjourned to
1654 a different room to examine the device, your Honor.

By the Court: Yes.

By Mr. Clement: (Reading.)

"Q. Mr. Melikian, will you now identify the machine which you said was available for our inspection?

A. Yes.

This is a coin-operated—

By Mr. Cole: Note, Mr. Reporter, that the witness is pointing to a machine.

A. This is a coin-operated Rull-Melikian dispenser for dispensing of hot coffee, either black or with cream or with sugar or with cream and sugar, and it also dispenses automatically a paper cup, and it dispenses hot water, and it is coin-operated with selectivity buttons, et cetera, on the outside.

This particular model is known as a model CR-1.

Q. Does the machine have on it anywhere indicia by which you can identify it as an individual machine?

A Yes. We have—most of our units, to the best of my knowledge, have serial plates on them and identification plates and they are either located on
1655 the inside of the unit or on the outer corner of the unit.

Q. Would you examine this machine and point out the identification, if there is any?

A. Yes, sir, I will.

The identification plate says, 'Manufactured by Rudd-Melikian, Inc., Philadelphia, Pa., patents pending, serial No. C-10,' and then we have the model number on there, which is C-1, and we also have a code which says, '12-17,' which we used here as an identification code as to the date of manufacture.

It further states on this identification plate—"

By Mr. Clement: And then Mr. McCanna said:

"Is that '17' or '47'?

A. '12-47.'

It further states on this plate, '20 amp., single phase, use only with 120 volts, 60 cycle, A.C.'

Q. Mr. Melikian, you spoke of a code to designate the date. Will you state what date is indicated by the code?

1656 A. Well, the '12' stands for December and '47' stands for the year 1947.

1657 Q. So that means that according to that designation, when was this machine made?

A. Well, this machine was manufactured sometime during the month of December of 1947. The exact date I don't know.

We also have other methods of identification on the unit for purposes of warrantys and guarantees on major component parts.

For example, we have a serial plate on the compressor and we have identification on the cup dispenser. These parts do wear out and they are guaranteed from the manner of identification that you have, and we use the manufacturer's own serial number that is on there."

By Mr. Clement: Mr. Cole then had that machine marked as Defendants' Exhibit No. 3 for identification.

By Mr. Clement: (Reading.)

"By Mr. Cole:

Q. Now, Mr. Melikian, by referring to the parts of the machine, Defendants' Exhibit No. 3, describe to us the cream dispensing portion of the mechanism and how it works.

A. Yes.

1658 Well, the cream dispenser essentially is the same as the coffee and the sugar. This container here (indicating), which I will open and show you, is—

By Mr. Cole: Note that the witness has removed a stainless steel cylindrical object from the refrigerator and is holding it in his hand.

A. We identify this as a commodity Canister.

By Mr. Cole: The commodity Canister is still connected to the apparatus by a flexible plastic tube, however.

A. (Continuing.) The flexible plastic tube is Tygon—"

By the Court: Go a little slower. Is this the refrigerator here (indicating)?

By Mr. Clement: (Reading.)

"Q. Now, Mr. Melikian, by referring to the parts of the machine, Defendants' Exhibit No. 3, describe to us

the cream dispensing portion of the mechanism and how it works.

A. Yes.

Well, the cream dispenser essentially is the same as the coffee and the sugar. This container here (indicat-
1659 ing), which I will open and show you, is—

By Mr. Cole: Note that the witness has removed a stainless steel cylindrical object from the refrigerator and is holding it in his hand.

A. We identify this as a commodity Canister.

By Mr. Cole: The commodity Canister is still connected to the apparatus by a flexible plastic tube, however.

A. (Continuing): The flexible plastic tube is Tygon tubing, and that is manufactured by the U. S. Stonewear, up in Ohio.

This unit is completely removable from the machine, as you can see.

By Mr. Cole: Mr. Reporter, the witness has now removed the container completely from the machine along with a cylindrical object which is secured at the other end of the flexible tube.

A. Now, that comes apart, you see.

Q. Mr. Melikian, what is the object that you have in your right hand?

A. Well, the object that I have in my right hand is a solenoid operated stainless steel metering valve.
1660 When it is operating with the timing device, it will open or restrict the flow of the commodities that go through here (indicating), whether coffee, cream or sugar.

Q. Now, Mr. Melikian, you referred to a timer mechanism.

Will you point out the location of the timer mechanism in the machine?

A. Yes. I would like to say that this solenoid valve has a plug on it and it hooks into an electrical harness which is directly connected to the electrical control blocks where we house these timer mechanisms, and the timer mechanisms are these two devices right here (indicating), and this one device over here (indicating).

There are a total of three—

By Mr. Cole: The witness is pointing.

A. There are a total of three such devices in the unit.

This also works in conjunction with what we call delivery relays which are electromagnetically operated relays that energize the timers, and then the timer is what opens

and shuts the plunger controlling the orifice and the dispenser.

1661 Q. Mr. Melikian, is the timer itself adjustable to provide for opening—holding the valve open for varying lengths of time?

A. Yes, yes.

Q. By what means is the length of time that the valve is held open controlled?

A. Why, it is a simple adjustment here (indicating), this small screw.

By Mr. Cole: Witness pointing.

A. To open it up, we just turn this around and that determines the length of time in which the timer will operate, you see.

Q. Yes.

A. (Continuing.) And we can measure it to a fraction of a second.

Q. Is that part identified by a part number or name?

A. Yes, it is. I don't know the exact name, it has been so long, but for purposes of identification you could refer to it as a clock-motor timer that we have incorporated here.

Q. Is this machine Defendants' Exhibit No. 3 for identification, identical in the respects we have discussed 1662 with the machines whose sale was indicated by Defendants' Exhibits 1 and 2 for identification?

A. Oh, yes. This is identical in every respect, with the exception that it is older now and shows some wear. It has been repaired, but other than that, it is identical.

Q. Was this machine ever sold?

A. Yes, sir, this machine was sold. This is not something that has been around here. We got this from one of our customers.

Q. How did you acquire it from your customer?

A. We asked his permission to bring it over here in an effort to cooperate with you people."

By Mr. Clement (Reading): "Mr. McCanna, if you wish to examine the witness with respect to this point—

By the Witness: If you would like to know, this unit—

By Mr. Cole: Excuse me.

By the Witness: —has sold I don't know how many drinks, but the meter reading here says 87,000. That's probably gone around a couple of times—

By Mr. Cole: I see.

By the Witness: —which is indicative that it works.

1663 Q. Have you any further you would like to add about this machine, Mr. Melikian?

A. No, except that there are many of them that are still in operation and giving good, faithful service.

By Mr. Cole: I see.

A. And we have many testimonials to that effect."

By Mr. Cole: Mr. McCanna, you may cross-examine with respect to this.

"Cross-Examination by Mr. McCanna.

Q. Mr. Melikian, you say this particular machine was acquired recently from a customer? When was that acquired?

A. Well, about an hour ago.

Q. Just delivered here now?

A. Yes, sir, uh huh.

Q. Who is the customer?

A. Kwik Kafe, of Philadelphia.

Q. I have just removed a paper cup from this machine, and is this the size and kind of cup that has been used right along with it?

A. No, sir, this is not. We have used many differ-
1664 ent sizes, depending upon the retail customer's needs, and different kinds of cups.

For example, we have used plastic cups, plastic-lined cups, as well as paper cups. This (indicating) is a double-wrapped cup. We have used single-wrapped cups; we have used eight-ounce cups as well as six-ounce cups. We have even used four-ounce cups for special situations.

Q. Now, in all of these situations of cups to which you have just testified, is there any marking on the cup stating what the contents of the cup shall be?

A. You mean as far as the volume—

Q. As far as the public is concerned. Do you state on that cup what the volume is that they are obtaining?

A. Every cup, to the very best of my knowledge, has an identification number on the bottom, and the last digit of that identification implies the number of fluid ounces that that cup is capable of holding.

This one (indicating) has a '7V' on the bottom, which means that this cup, if filled to the top, will hold seven
1665 fluid ounces, and we refer to the size of the commodity that would be sold in here as a six-ounce beverage

because we would not dispense it to the very top, to full capacity, and that, I point out on the bottom here, is '7V.'

Each one has a different number, but it always ends up with a '7' on the bottom if it's six ounces that we are serving.

This is a 21V—

Q. As far as the customer is concerned, the person who wishes to buy a cup of coffee, that person, however, doesn't know what the content is so far as any marking on the cup?

A. On the paper, no.

The only other markings we would have would be point of sale material that our customers would put on the unit advertising what the price of the coffee is and the size of the drink and the selectivity that he can buy.

In other words, I would say a large, eight-ounce cup with our new brand, including Arabian Mocha and fresh cream and so forth, and he would merchandise it in that way.

As far as it being a permanent aperture on this (in-
1666 dicating) or on this cup, it wouldn't be, because in some instances where we serve less, we advertise it on a point of sale card on the outside if it is used for a specific purpose.

1667 Q. What is this machine set for now?

A. I really don't know, sir. As I told you, it has only been over here a few hours. I am of the opinion, however, that this is set to dispense a six-ounce beverage which would include cream and sugar in that amount.

Q. Is this machine in operating condition?

A. Yes, sir, I believe that this machine is in operating condition, although I haven't actually seen it work. It looks to be complete in every respect.

Q. Will you please tell me what the height and diameter of this commodity canister for the cream is?

A. In answering your question, the diameter of this particular can is 6¼—correction, 6¼ inches as I read it roughly with this scale, and the depth of this can is approximately 8¼ inches as I read it roughly with this scale.

Now, if you like, I will examine a couple of more cans."

By Mr. McCanna: At this point, the witness is examining the commodity canister for coffee.

"A. Well, the first one was the cream.

1668 Mr. McCanna: Yes.

A. This would be for coffee, Kwik Kafe coffee concentrate. This is 8¼ inches approximately. I might say that—for your information—that we have it in different

sizes depending upon the product that we are serving. At the present time we are using other products, so we are using different size canisters. If you would like, I will show you one.

There is another one right here (indicating).

By Mr. McCanna:

Q. Well, we will confine our remarks to this machine right here, I believe, if that is satisfactory.

Now, inside of these commodity canisters, as you see, there is no mechanism or parts whatsoever.

A. On the inside, no. You see, from a public health standpoint you have to have these rounded corners and clear area for cleaning, and we don't have anything in there.

Q. Now, what is the dimension from the bottom of the canister to the delivery outlet of the valve which
1669 you spoke about?

A. Well, this is the critical point, and this particular dimension is the thing that took a great deal of development, I might add, on our part.

Our problem here was to maintain, as a result of gravity flow, a constant pressure so that we could meter it out of this solenoid valve, and in order to do that we had to develop an area where these head pressures would be—would remain constant so that when the can is empty or low or three-quarters empty we would still be able to maintain a satisfactory pressure to get accurate dispensing through this valve, and if it were full there would be no variation to speak of except within reasonable tolerances.

I might say with the changing of the diameter of the can and the height of the can it also changes this critical dimension from the bottom of the canister here (indicating) to this metering valve.

On this particular machine, which is the one you asked the questions about, it is approximately 18¼ inches from the bottom of the commodity canisters of all three units
1670 to the bottom of the solenoid dispensing valve.

Q. Is that solenoid valve the construction that is shown in your Patent 2,682,984?

A. Yes, sir, that is.

Q. Now—

A. I believe that is.

Q. I call your attention to the hot water container and

ask what the pressure would be maintained in there or what—how do you obtain that pressure in that container?

A. Well, we pioneered designing of water systems for all vending equipment which hooks up directly to the city water system, and the city water systems have a tendency to fluctuate as far as their pressures are concerned, so what we did, as we put on a pressure regulating valve, which I am pointing to here (indicating), and that pressure regulating valve sets the pressures of the water coming in at a very low pressure, like five pounds per square inch, or even less, and we—

Q. What is the name on that?

A. That's a Watts, made by the Watts Manufacturing Company.

1671 And then we piped the water past that water pressure control device into a gate valve which we can use to either open or close the entire water system with this device right here I am pointing at (indicating), and then we pipe the water into a stainless steel reservoir with a heat element in it and we heat the water in this stainless steel reservoir.

Now, we have in there a mercoid limit control thermostat which controls the water temperature and turns the heating element off and on. Now, as you know, when we heat water—we also have a safety thermostat on the top, which is this device here (indicating), and in case the main operating thermostat goes bad, the safety thermostat would turn it off at the critical temperature.

1672 Q. What temperature is—"

By Mr. Houghteling: At this point, Mr. Cole objected:

"This is really considerably outside the scope of the direct examination."

By Mr. McCanna: And then I said:

(Reading):

"You have submitted this; I want to know something about it."

By Mr. Houghteling: Then Mr. Cole said: "Note the objection."

(Reading):

By Mr. McCanna:

"Q. This man is leaving the country and he won't be here to tell us about it at the trial, so I want to get a few,

what I regard as critical dimensions and figures. I believe I am entitled to ask this witness what he has known about the machine."

By the Court: Go ahead.

(Reading):

"Q. I believe the question was what temperature you are able to maintain of water in this can.

1673 A. Boiling is at 212 degrees Fahrenheit, and we maintain it substantially below that temperature. What this machine is set at or what the specifications are, I don't know.

Q. You couldn't even say about what your practice is?

A. I really don't know. I just noticed the unit, and I would like to say this to you, sir—I think this is an important fact—and that is, we maintain a pressure relief valve on the top of the unit so that any pressures that we build up as a result of heating water can be completely dissipated and relieved so that it would not influence the pressures that pass through cold from the water system. In other words, we got to compensate for these pressures two ways: Once when it comes through the water system cold, and if it builds up any pressure in the tank we have to go to relieve it up there.

Q. So what the size or trade designation of this pressure regulator corresponds with is this one marked '22a' in the patent?

A. That's right.

Q. Do you know what the size or capacity of that is?

1674 A. Well, I think this particular one operates at very low pressures and it has a very quick recovery time, and I know it will operate down around 5 pounds.

Q. I noticed in the patent—that is, your patent No. 2,682,984—in Figure No. 1, you show a drain trap, 49. Is that used on this machine?

A. Yes, that is used on this machine although it has been removed because this machine has been serviced and a piece of rubber inserted instead, and the reason for that is that it just got old and we found out it wasn't necessary to replace it, I guess. I didn't run this machine, so I don't know what their problems were from that standpoint.

Q. Now, these stainless steel rollers, 23, that are shown in Figures 3 and 4, are they in this machine, Exhibit No. 3?

A. No, they are not in this particular machine, al-

though I can give you one. This was done with a die, and I am sure that this is a replacement part.

Those stainless steel rollers that we had here were
1675 made by hand and they had a tendency, because they were so thin, to bend. People could bend them with their finger, so what we did, later on we made a die and made it out of stainless steel, and the customer in this case just bought a new machine and replaced those rollers.

Q. Mr. Melikian, have you ever used the construction disclosed in your patent 2,682,984, for filling milk into paper cartons for sale to consumers; that is, the ordinary home?

A. The reason I am thinking is we have had some people in the manufacturing business come in in earlier years and they were kind of fascinated by this idea, the way we meter so accurately, and we came—

Q. I am asking you a question—

A. I don't know where they were from. I don't remember now.

1676 Q. So far as you know, did you ever use the construction shown in this patent of yours for the purpose for which I have just stated?

A. For commercially packaging milk—

Q. Yes.

A. —in paper containers?

Q. Yes.

A. No, sir, not to the best of my knowledge. I know there were some machine manufacturers—"

By Mr. McCanna: I move to strike out the last statement. I am asking a question.

By the Court: Strike it out.

By Mr. Clement: There is a very small bit of redirect examination.

Redirect Examination by Mr. Clement.

(Reading:)

"Q. Is the canister—are the commodity canisters in this machine now either the original canisters or identical with the canisters that were shipped with the machine?

A. I know they are not the original.

Q. Are they identical?

A. They are rather close, I would say, yes. They are rather identical.

1677 Q. Is the relationship between the position of the canister and the position of the valve the same as the corresponding position when the machine was made?

A. Yes. That is the critical dimension.

Q. Is the timer to which you referred a portion of the original mechanism?

A. It seems to be, but I mean I don't know whether that is our original, but the timers were originally part of the equipment, yes, sir.

Q. And the means for adjusting the length of the timing cycle?

A. Oh, yes. They were definitely part of it."

By Mr. Clement: (Reading.)

"Very well. I have no further questions about this.

* * * * *

By Mr. Clement: (Reading.)

"Q. Mr. Melikian, I now hand you a soft copy of K. C. Melikian et al. patent number 2,682,984, to which counsel for the Plaintiff referred in his examination, and I ask you if you are the K. C. Melikian named as an inventor in that patent?

A. Yes, sir, I am.

Q. What does the patent disclose, very briefly?"

1678 By Mr. Clement: Mr. McCanna objected:

By Mr. Clement: (Reading.)

"Well, I would object to that. I think the patent on its face discloses what it shows; what is printed there."

By Mr. Clement: The question was stricken.

By Mr. Clement: (Reading.)

"Q. Mr. Melikian, counsel for the Plaintiff asked you to compare the structure disclosed in this patent with the structure of Defendants' Exhibit No. 3 for identification. Does this patent disclose a coffee vending machine?

A. Yes, sir, it does.

Q. Does the coffee making machine disclosed include a cream dispensing portion?

A. Yes, sir, it does.

Q. Does it disclose a cream canister?

A. Yes, sir, it does.

Q. Does it disclose a cream metering valve?

A. Yes, sir, it does.

Q. Does it disclose a timer for the controlling of the opening and the closing of the valve?

A. Yes, sir, it does.

1679 Q. Does it disclose means for adjusting the length of the valve-operated cycle?

A. Yes, sir, it does.

Q. Does it disclose the location of the cream container at a height above the metering valve?

A. Yes, sir, it does.

Q. In the respects in connection with which you have just testified, is it substantially similar to the machine Defendants' Exhibit No. 3 for identification?

A. Yes, sir, it is.

Of course, counsel, I wish to advise you again that this machine has been in use and we arranged to pull it out of probably some location and it has been getting preventive maintenance.

As I explained to you, there might be some parts in this particular unit you just looked at that will be somewhat modified or different, such as the cup well tray. Instead of it being bars, it is now pierced out and blanked out with a die.

Q. Is it therefore your testimony that the patent discloses a structure close to the original form of Defendants' Exhibit No. 3?

A. Very much so, yes, sir.

1680 "Q. Were machines of the type disclosed in the patent sold before the filing date of the patent? That is, your patent 2,682,984 and the date February 10, 1948?

A. Yes, sir, they were."

By the Court: What was that last question?

By Mr. Clement: (Reading.)

"Q. Were machines of the type disclosed in the patent sold before the filing date of the patent? That is, your patent 2,682,984 and the date February 10, 1948?

A. Yes, sir, they were.

By Mr. Cole: I now ask the Reporter to mark K. C. Melikian et al. patent 2,682,984, or rather a soft copy of the patent, as Defendants' Exhibit No. 4 for identification."

(Thereupon said document was marked Defendants' Exhibit No. 4 for identification.)

By Mr. Clement: (Reading.)

"Q. Mr. Melikian, the machine, Defendants' Exhibit No. 3 for identification, you stated on your cross-examina-

tion was acquired within the past hour or so. From 1681 whom?

A. From our customer in Philadelphia, Kwik Kafe of Philadelphia, Inc.

Q. Does Rudd-Melikian Corporation operate machines itself?

A. As a corporation, no, sir.

Q. No. Then your customers operate the machines?

A. Yes, sir, our franchisees operate the equipment.

Q. The machine, Defendants' Exhibit No. 3—was the machine, Defendants' Exhibit No. 3, sold by Rudd-Melikian Company to Kwik Kafe of Philadelphia?

A. Yes, sir.

Q. And about when was that sold?

A. Well, I would think it was sold sometime between the date it was manufactured, which was December of 1947, and the early part of 1948, which would be Janu..ry.

Q. And it has been, to the best of your knowledge, in the possession of the customer until today?

A. Oh, yes, it has, to the best of my knowledge."

By Mr. Clement: That is all. I have no further questions.

1682 *Recross Examination by Mr. McCanna.*

(Reading.)

"Q. Mr. Melikian, within the past hour have you compared your patent 2,682,984, with this machine marked Defendants' Exhibit No. 3?

A. Within the past hour?

Q. Yes.

A. Not carefully; just looked at it.

Q. Just while we were out in your shop looking at it?

A. Yes, sir, and I also have researched the patent prior to this past hour."

By Mr. McCanna: That is all.

Redirect Examination by Mr. Clement.

(Reading.)

"Q. By 'researched the patent,' Mr. Melikian, do you mean you have studied the patent recently?

A. Oh, yes, very much so."

• • • • •

By Mr. Clement: (Reading.)

"Mr. Reporter, I now offer Defendants' Exhibits 1 to 4 inclusive, for identification, in evidence.

1683 I also ask the Reporter to record that counsel have stipulated that the reading and signing of the deposition may be waived."

By Mr. Clement: That is all.

1684 By Mr. Clement: I would like to recall Mr. Dempsey and have a demonstration of the machine at this time.

By the Court: Very well.

LUTHER DEMPSEY, recalled as a witness on behalf of the Defendants, having been previously duly sworn, was examined and testified further as follows:

Direct Examination (Resumed).

By Mr. Clement: I will ask you to step over to the machine, Mr. Dempsey.

(The witness left the witness stand and testified while demonstrating machine.)

By Mr. Clement:

Q. While the electricity is being turned on, I will ask you, Mr. Dempsey, to identify the canisters that were referred to in this deposition. Would you speak up, please?

A. We have three of them, two here and one in the refrigeration compartment.

Q. Where do they go?

A. The cream goes in the refrigeration compart-

1685 ment. The coffee and sugar go on the outside of the refrigeration compartment.

Q. So the cream canister is the only one that goes in the refrigerator.

You need not put them in there, Mr. Dempsey.

What type of coffee do you use in the canister?

A. It is a frozen coffee concentrate; a coffee concentrate that is held in a frozen state.

Q. What is the third canister for? You may put them down.

A. Sugar, liquid sugar.

Q. Liquid sugar?

A. Yes, sir.

Q. In the normal condition are there additional tubes, such as the one that is in the machine at the moment?

A. Yes, sir.

Q. What are they for, the additional tubes?

A. They are for the sugar and coffee. All three are liquids.

Q. Where do they go, and from where?

A. They go from the canisters to the solenoid
1686 valves. It goes in here. There are three of them here.

Q. How many solenoid valves?

A. Three.

Q. One for each canister then?

A. Yes, sir.

Q. Referring back to the cream canister, do you have something in that canister now as it sits in the refrigeration compartment?

A. We have water in it.

Q. Is it possible to demonstrate the operation of the machine at this time?

A. Yes, sir.

Q. Would you please demonstrate it. Would you use that small graduate rather than a cup so that we can see the dispensing.

Do you know, Mr. Dempsey, how much liquid it is set to dispense at the moment?

A. It is a little less than an ounce.

Q. Less than an ounce?

A. Yes.

Q. Is it possible ot vary the amount of liquid that is dispensed at any one time?

A. Yes, sir. On this particular timer, you can
1687 open it up to around ten ounces, I believe. (Witness demonstrating dispensing mechanism.)

Q. What is the minimum amount that you can dispense, roughly?

A. Five cc's is about the lowest we set it.

Q. How many cc's are there in an ounce, roughly?

A. There is 27.75.

Q. So that you can vary it from what low figure roughly?

A. You can probably get it down to two cc's.

Q. Up to what figure?

A. Up to ten ounces on this particular timer.

1688 Q. Is the amount dispensed in each operation of the cream dispensing device approximately the same?

A. Yes, sir.

Q. In each dispensing operation?

A. Yes, sir.

Q. Would you now proceed to demonstrate the operation of the machine, and please tell us what you are doing at the time you are doing it, please, Mr. Dempsey?

A. First you have to—

Q. Speak as loudly as you can, please.

A. The coin is inserted here, which trips the switch which will give you coffee, black coffee and water, hot water, which is now connected up here. If the customer wants cream or sugar, he presses this button here for cream.

Q. Is that the cream?

A. That would be the cream.

Q. Which is being simulated now by water running into the graduate?

A. Yes, sir.

Q. Would you look at the graduate and see approximately how much has gone in?

A. It is just a little over an ounce.

1689 Q. Go ahead.

A. When this lever is pressed here, it operates the solenoids and the timers. This is the cream timer and this is the cream solenoid.

Q. A green timer and green solenoid?

A. Cream.

Q. Thank you.

A. You will notice the timer is moving.

By Mr. Clement: Something appears to have stopped.

By Mr. McCanna: It is running over, isn't it?

By Mr. Clement: Turn it off.

By Mr. McCanna: It is continuing to run over.

The machine is still continuing to run the water over the glass.

By Mr. Clement: Do you want to turn it off until you get it adjusted?

By Mr. Clement:

Q. Is it back in adjustment, Mr. Dempsey?

A. I think so, yes.

Q. Could you demonstrate once more the operation that you showed us previously—if there is any water left

1690 in the cream container.

Would you check the canister and see if it is empty. Mr. Dempsey?

A. We still have water in it.

Q. All right, sir, thank you.

Will you demonstrate it again, if possible, please?

A. First the coin is inserted. When you press this button, it starts this timer, which cuts it off at a given amount. This timer is adjustable. It will be adjustable probably from—

By Mr. McCanna: What does that measure?

By the Witness: There is an ounce in it, just a little over the ounce line.

By Mr. Clement:

Q. Would you continue telling us about the timer for the moment, Mr. Dempsey?

A. This timer is adjustable by loosening that screw and moving this piece here up in any position, which gives the timer longer to run to cut the switch off. It is cut off by the switch.

Q. Would you run it two or three times now and tell us how much it dispenses?

How much sir?

1691 A. One ounce.

Q. Would you do it again, please?

A. It is just above the one ounce line.

Q. Will you please keep your voice up? There are a lot of us trying to hear you.

How much this time, Mr. Dempsey?

A. Just a little over the one ounce line.

Q. Will you do it again, please, Mr. Dempsey?

How much this time, Mr. Dempsey?

A. The same amount.

Q. Now, Mr. Dempsey, would you change the timer so that it will dispense a substantially larger amount, perhaps five ounces, and put the larger measuring glass in there, please?

While you are doing that, Mr. Dempsey, I will ask you who makes the changes in the timing with respect to the cream dispensing?

A. The serviceman would make that.

Q. He can vary the amount of cream that is dispensed for each cup which has the cream button pushed in connection with the dispensing, is that correct?

A. I didn't get that.

Q. He can set it at a particular amount of cream for each pushing of the dispensing button for the cream?

1692 A. Yes, sir.

Q. Will you continue to make your adjustment, Mr. Dempsey?

Have you now changed the timing mechanism?

A. Yes. I don't know just how much.

Q. Have you set it up to a substantially larger amount?

A. Yes, sir.

1693 Q. Will you now operate the dispenser?

How much was dispensed?

A. A little less than three ounces.

Q. Would you do it again, Mr. Dempsey, please?

That is approximately three times what we had before, is that correct?

A. Yes, sir.

Q. That would make a lot of cream in one cup of coffee, wouldn't it?

A. You couldn't stay in business long that way.

Q. How much was dispensed that time?

A. The same amount, a little less than three ounces.

Do you want me to set it up once more?

Q. Run it that way once more, and then we will set it up again.

A. It is right under three ounces.

Q. Mr. Dempsey, what is happening to the level of water in the cream canister during these dispensing operations, and particularly that long run when it overflowed? What is happening to the level?

A. It has dropped quite a bit.

Q. It has dropped considerably, and yet you are

1694 still getting the same dispensed amount for each operation?

A. Within a few cc's, yes.

Q. Now can you set it up to, say, ten ounces? Then I think we will be through with the actual dispensing.

Is there water left in the canister?

A. Yes. For a larger amount you will have to change the hole the screw goes in.

Q. While you are doing that, Mr. Dempsey, could you identify that large white object in the back part of the machine?

A. This is the hot water tank.

Q. What is the object at the bottom of the machine in the cabinet?

A. That is a refrigeration unit.

Q. What is the pail used for under your timing elements?

A. That is a waste pail. If the machine overflows or someone pours the coffee out or spills the coffee. It is a waste pail.

Q. Is the mechanism above the timing element, the cup dispensing mechanism?

A. Yes, sir.

1695 Q. What is the mechanism on the back of the door?

A. That is the slug rejector.

Q. Slug rejector? That has to do with the coins going into the machine?

A. Yes. It throws out the slugs and also trips the machine.

Q. In normal operation the user would deposit the money in the machine, and then select whether he wants sugar or cream or both, is that correct?

A. Yes, sir.

Q. By pushing the buttons on the front of the machine?

A. Yes, sir.

Q. If he does not push those buttons, he will get black coffee, is that correct?

A. Black coffee only.

Q. How often do you refill the canisters, Mr. Dempsey, in normal practice?

A. At least once a day.

Q. Depending on the amount of use?

A. Yes, sir. There would be times when it would be more.

Q. Is there any substantial variation in the amount of cream dispensed when the canister is full and when

1696 it is substantially empty?

A. Not noticeable, no, sir.

Q. Would you repeat that?

A. It is not noticeable in the coffee.

Q. Do you have any idea how much it would be in terms of ounces or cc's?

A. It would be in cc's but—

Q. Would it be less than an ounce?

A. Way less than an ounce, yes, sir.

Q. Way less than an ounce?

A. Just a few cc's, not very many.

Q. Thank you. Are you ready?

A. Just one minute.

Q. This is the type of adjustment that the service man would make when he is changing the amount of cream to be dispensed, is that correct? But he wouldn't make it this much.

A. Normally he wouldn't make it, no, sir.

Q. Can you make the adjustment satisfactorily? If not, we will just eliminate it.

A. The adjustment the service man would make, he would never have to take out the screw.

Q. Are you ready to make the demonstration?

A. Yes, sir.

1697 Q. This is a much larger amount than would normally be dispensed, is that correct?

A. Yes, sir. This would be approximately ten ounces, I think.

Q. The water is now flowing from the solenoid valve after you pushed the button, is that correct?

A. Yes, sir.

Q. Just as in the previous cases?

A. Yes, sir.

Q. And it is continuing to flow?

A. Yes, sir.

Q. A very substantial amount?

A. Yes, sir.

Q. And the timer is now keeping track of the time?

A. Yes, sir.

1698 Q. Approximately how much was dispensed in that operation, Mr. Dempsey?

A. Ten ounces.

Q. Could you do that once more, and then I think we will be through.

How much water is left in the canister? Would you check?

A. It is about a third full.

Q. Would you empty the water in the measuring cup into the pail, not into the canister, but into the waste pail.

Now would you operate the dispenser once more? It is set for approximately ten ounces, is that correct?

A. Yes, sir.

Q. Now the solenoid valve has been operated and the water is again running into the graduated glass, is that correct?

A. Yes, sir.

Q. After you pushed the cream button on the front of the machine?

A. Yes, sir.

Q. It is continuing to flow?

A. Yes, sir.

1699 Q. How much was dispensed that time?

A. Ten ounces.

Q. I believe that is all.

Would you point out the name plate on the machine?

A. The name plate on this machine is on the inside of the machine.

Q. Would you read what is on the name plate, please?

A. "Manufactured by Rudd-Melikian, Incorporated, Philadelphia, Pennsylvania. Patents pending. Serial No. C 10." The date is "12/47. Model No. C 1."

By Mr. Clement: That is all. Thank you.

By Mr. McCanna: No cross-examination.

By the Court: How did the witness say the pressure was maintained?

By Mr. Clement: He said that they refilled the canisters after the level had dropped to the point where they need refilling.

By the Court: They get them about 18 inches above the point of discharge, is that it?

By Mr. Clement: Yes. I believe Mr. Melikian referred to the distance between this valve and the bottom of the canister. That would be a so-called static head from
1700 here to here. This would be the variable head up here.

By the Court: Does hot water come in there at any time?

By Mr. Clement: It comes in, yes, from this hot water heater but it comes in from this pipe which is behind this solenoid.

By the Court: Yes. I saw it.

By Mr. Clement: All three components are running into the cup separately, the hot water, the coffee, and the cream and sugar—I guess there are four components actually. I am not sure in what sequence, but I assume the coffee might go in first, and then the hot water.

By the Court: I have no further questions.

(Witness excused.)

By Mr. Clement: Mr. Deletzke, will you take the stand again, please?

By the Court: Do you want to take a short recess?

By Mr. Clement: Yes, please.

(Whereupon a short recess was taken, after which the following further proceedings were had:)

1701 By the Court: Proceed.

By Mr. Voland: Mr. Rosboro, will you take the stand, please?

OTIS AUGUSTUS ROSBORO, called as a witness on behalf of the Defendants, having been first duly sworn, was examined and testified as follows:

Direct Examination by Mr. Voland.

Q. Will you please state your full name, sir?

A. Otis Augustus Rosboro.

Q. Where do you live, Mr. Rosboro?

A. In Chicago part of the time.

Q. Is that your residence, Mr. Rosboro?

A. No. My residence is in Florida.

Q. Will you please tell us what your business or occupation is?

A. I am now managing director and vice-president of Vapor International Corporation, Ltd., and Vapor Export Corporation. They are wholly owned subsidiaries of Vapor Heating Corporation.

Q. Will you tell us, please, the nature of the business in which Vapor Heating Corporation is engaged?

1702 A. Vapor Heating Corporation is engaged in the manufacture and sale originally of car heating equipment and temperature controls and devices to provide heat, like steam generators. But more recently we have an expanded base in other industries.

Q. I presume you were referring to railroad car heating?

A. Railway car heating, yes.

Q. How long has Vapor Heating Corporation been engaged in that business, if you know, Mr. Rosboro?

A. About 50 years. I have been with them 45 years, so I know they have been in business that long.

Q. You have been with them for 45 years?

A. I have.

1703 Q. Where are the plants and offices of Vapor Heating Corporation located?

A. The general office is in the Railway Exchange Building at Chicago. Our new plant is now at Niles. We have branch offices throughout the United States and abroad.

Q. In 1950, Mr. Rosboro, what position did you hold with Vapor Heating Corporation?

A. At that time I was vice president and secretary.

Q. In that year, that is in 1950, if you know, Mr. Rosboro, did Vapor Heating Corporation have occasion to make a special investigation of the Mojonnier-Dawson Company and its products?

A. Yes.

Q. Will you explain briefly to the Court the nature of Vapor's interest in the Mojonnier-Dawson Company at that time?

A. As I recall there were some possibilities of expanding our manufacturing facilities, and we were looking toward the possibility of manufacturing the filling units for Mojonnier-Dawson, and possibly taking into con-
1704 sideration an investment in their company.

Q. You say that Vapor made an investigation of the company. Will you tell us in a general kind of way what was done in that connection by Vapor?

A. Well, we had an investigation made by Trundle engineers for one, and some other inquiries were made, and I was requested by the president to make a personal investigation as to the possible source of carton supply at that time.

Q. Did you pursuant to those instructions from your president have a conversation with Mr. Robert Farrell of the American Can Company?

A. I did.

Q. When did that conversation take place and where, Mr. Rosboro?

A. In his office, downtown—I have forgotten the address—on Michigan Avenue, I believe.

By Mr. McCanna: Isn't that hearsay, your Honor, his conversation with Mr. Farrell?

By Mr. Voland: On the contrary, we haven't got to the conversation. Before we get to it, we are impeaching a witness who appeared on behalf of the plaintiff. It
1705 is not hearsay. We are trying to show contradictory statements, if the Court please.

By Mr. Voland:

Q. Will you repeat when and where that conversation was had?

A. That was on July 14th, according to the memorandum I wrote afterwards, in his office.

Q. In the year 1950?

A. 1950.

Q. Who was present at that time?

A. I think only Mr. Farrell and myself, so far as I recall.

Q. I believe you stated—well, let me ask you this: Will you first explain the purpose of your visit to Mr. Farrell?

A. To discuss with him the possibility or the probability of being able to get cartons for our milk filling machine, if we decided to go into it.

Q. Now will you state to the Court, please, what was said by you and what was said by Mr. Farrell in that conversation, at least as respects the availability of cartons for the small dairies?

1706 A. Well, we had quite a lengthy conversation. It is all covered in a memorandum I prepared. But the gist of it now, I think, the gist of it was this: That Mr. Farrell indicated that the present availability of cartons of their manufacture, American Can, was not sufficient to supply all the small dairies even if they wanted to do it, and that they were in a position to choose their customers. That is about the gist of it.

Q. Have you exhausted your present recollection of the conversation, Mr. Rosboro?

A. Yes, without referring to the memorandum I wrote, because when I write a memorandum, I don't try to remember all the details.

Q. All right, sir. You say that you prepared a memorandum of this conversation with Mr. Farrell?

A. I did, yes, sir, on the same day.

Q. Was that prepared on the same day?

A. Yes, sir.

Q. And was that prepared in the regular course of business, Mr. Rosboro?

A. Yes, always.

Q. And is it the regular course of your business
1707 to prepare such memoranda?

A. Absolutely.

1708 By Mr. Voland: I shall ask the reporter to mark as Defendants' Exhibit 44 for identification, a memorandum of three pages on the letterhead of Vapor Heating Corporation, dated July 14, 1950, addressed to "Mr. Bruce," and signed by "O. A. Rosboro."

(Thereupon said document was marked Defendants' Exhibit No. 44 for identification.)

By Mr. Voland:

Q. I hand you a paper which has been marked as Defendants' Exhibit 44 for identification, Mr. Rosboro, and ask you whether that is a memorandum to which you have just referred?

A. It is. It has my signature.

Q. And has that been in the files of Vapor Heating Corporation since it was delivered to Mr. Bruce?

A. It has.

Q. May I have it, sir? Thank you.

Now, Mr. Rosboro, after this investigation of the Mojonnier-Dawson Company and its products had been made by Vapor, did Vapor pursue any further the idea of manufacturing the Mojonnier-Dawson filler or taking an interest in the company?

1709 A. No.

Q. What became of that project?

A. It was abandoned.

Q. Do you know why it was abandoned?

A. Well, it was abandoned for one reason because there was no assurance that there would be sufficient cartons available for use with the machines after they were built.

By Mr. Voland: I would like to offer in evidence at this time as Defendants' Exhibit 44 the document marked as Defendants' Exhibit 44 for identification.

By the Court: Any objection?

By Mr. McCanna: I haven't seen it, your Honor.

By Mr. Voland: Here it is.

By Mr. McCanna: No objection.

By the Court: There being no objection, it may be received.

(Said document, so offered and received in evidence, was marked DEFENDANTS' EXHIBIT NO. 44.)

By Mr. Voland: I should like to read certain ex-
1710 tracts from this exhibit to the Court, if I may, please.

Paragraph 3 of this memorandum reads as follows:

"Mr. Farrell stated that they knew of the Mojonnier-Dawson filling machines, but that they did not think much of their small machine, although they liked the large one and thought it had possibilities; that their present capacity for carton production is not sufficient to supply all small

independent dairies, even if they wanted to do so (stating that they could well choose their customers); that they produced approximately 2¼ billion cartons last year; and that the new plant at Baltimore—ready for operation about September 1st—would give them an adequate capacity or output of over a million cartons per week of each size; that the cost for a complete (5 sizes) of carton production—including ground, building and equipment—would run around $5,000,000; that the machines they had rented were made by or for them, to their own specifications, but that
1711 they had recently become undecided as to continuing further manufacturing and rental. In this connection, he mentioned the recent Government suit and court decision, stating that it was of little or no significance except requiring (as of January 1, next) a change in their contract for carton purchases."

Skipping over to page 2, the fourth paragraph on that page, a short paragraph:

"He volunteered the information that the small dairies were somewhat handicapped in using American Can cartons because they had to be ordered by the carload and the question of storage was a problem; also that the labels presented a headache due to various Health Department restrictions in some areas that prevented the use of standard labels."

1712 The last paragraph on the same page:

"I posed the direct question as to whether—should we become interested in the production of the Mojonnier-Dawson equipment—some arrangements could be made with American Can under which a supply of cartons could be assured the purchasers of such machines. He stated that someone 'higher up' than he would have to decide that, but he questioned whether any such commitment would be made. He pointed out, for example, that if there were say a total of 250 Mojonnier-Dawson filling machines in this area, it would require the entire output of their Maywood plant, and that such a commitment would not be fair to their other customers. Of course, he said they could always consider enlarging and providing additional facilities to meet the demand."

You may cross-examine.

1713 *Cross-Examination by Mr. McCanna.*

Q. Mr. Rosboro, at the time you went to see Mr. Farrell, did I understand you to say that he told you the American Can cartons were not available to you?

A. You read the memorandum. He said exactly what I wrote down there.

Q. I am asking you now, is that your testimony?

A. My testimony conforms to exactly what I wrote down there. You may read it, or give it to me and I will read it.

Q. I am just asking you that question now, Mr. Rosboro.

A. Is it what I wrote down? Remember it is five years ago. I don't remember except what I wrote down.

Q. You don't remember—

A. I object to that question, worded the way it is, your Honor, because I wrote down that same day my entire conversation. If your answer is in that memorandum I wrote, O. K. If it is not, I have nothing more to say.

Q. I think the answer I am looking for is not in

1714 that memorandum.

A. Then I have no answer to make to your question. Is that fair, your Honor?

Q. Let me hurry this up this way, Mr. Rosboro. I think you know what I am talking about.

Did you know or did Mr. Farrell tell you when you were talking to him that day that he didn't want to sell American Can cartons to you because you wanted to handle them as a jobber?

A. No.

Q. He didn't say that?

A. No. There was never any indication that we were to be a jobber. It was a matter of manufacture.

By Mr. McCanna: That is all.

By Mr. Voland: No further questions. You may step down.

By the Witness: Thank you.

(Witness excused.)

By Mr. Clement: I would like to recall Mr. Deletzke.

* * * * *

1715 *Direct Examination (Resumed) by Mr. Clement.*

Q. Mr. Deletzke, at the close of this morning's testimony, we were considering the Engels patent, No. 2,542,239, which is the second one from the end of the compilation of patents the defendants are relying on.

You had just described, I believe, the operation of all of the elements shown in Figue 1 of that patent, except elements 42 and 44.

Could you tell me what those are, please?

A. Elements 42 and 44 are small electrical units of the type used for maintaining level of liquid in a reservoir.

Q. What are the dotted lines that are labeled 46 and 48?

A. Those dotted lines, as I recall, are an indication of maximum and minimum levels of the material in the reservoir 10.

1716 Q. Mr. Deletzke, do you have a copy of the reissue patent, No. 23,830, in your possession?

A. Yes, I do.

1717 Q. Would you turn to Figure 5 of the patent in suit, the reissue patent, please?

A. Yes, I have it.

Q. Do you see elements in that Figure 5 corresponding to the elements in Figures 1 and 4 of the Engels patent? That is Figure 5 of the Mojonnier reissue patent.

A. Referring first to the arrangement for maintaining level of the liquid in the reservoir 10 of Engels, that is, the elements 42 and 44, find their counterparts in the elements 77 and 78 of Figure 5 of the reissue patent 23,830.

Q. Are those what would be called probes?

A. Those would be probes of the type used commonly in maintaining level of fluid in reservoirs.

Q. Mr. Deletzke, Claim 1 of the reissue patent to Mojonnier, the patent in suit, contains the language:

"means in said container operable to maintain the fluid in the container at a preselected level"

Would that phrase be applicable to these elements you have just described?

A. That would be applicable to the elements 77 and 78, as shown in Figure 5 of Mojonnier reissue patent
1718 23,830, and would also be applicable to the elements 42 and 44 of the Engels patent, No. 2,542,239, as shown in Figure 1 of the last mentioned patent.

Q. What other elements would you consider similar in the two patents?

A. Referring to Figure 5 of the Mojonnier reissue patent 23,830, obviously the tank 75 of that reissue patent corresponds to the tank 10 of the Engels patent 2,542,239.

The gate valve at the lower left-hand corner of the tank 75, Figure 5 of the Mojonnier reissue patent 23,830, corresponds to the valve at the apex of the bottom of the reservoir 10 and the Engels patent 2,542,239.

In the Engels patent the orifice of that valve is identified by the numeral 14. In the Mojonnier reissue patent, 23,830, the valve orifice is unnumbered, but it is at the bottom of the tubular element which extends from the bottom of the tank 75.

Q. Does that tubular element have a number?

A. I can't tell whether number 87 applies to the tubular element or whether it applies to the joint between the valve shoe and the valve stem. I will have to take a

1719 look.

Q. Well, I don't think that will be necessary. At least, it is at the barrel extending down below the tank?

A. The orifice is at the bottom of the barrel.

The valve element of the Mojonnier reissue patent 23,830 is obviously the gate-like element immediately above the numeral 95 in Figure 5 of that patent, while the valve element of the Engels patent 2,542,239, is identified by the numeral 16 as shown in Figure 1 of the drawings of that patent.

Now in the Mojonnier reissue patent, No. 23,830, the valve element is actuated by means of a valve stem 91, which is associated with the solenoid identified by the numeral 88.

The comparable structure in the Engels patent, 2,542,239, is the structural association between the valve element 16, which according to Figure 1 of that drawing extends upwardly and towards the left into the valve actuator 18, which according to the Engels patent may be a pneumatic device or any other suitable device commonly used for actuating valves.

1720 Now in the Mojonnier reissue patent, 23,830, the actuation or energization, rather, of the solenoid 88 is controlled by the timing mechanism identified by the numeral 89.

In the Engels et al patent, 2,542,239, the energization of the valve actuator 18 is controlled by the timing mechanism illustrated in Figure 4, immediately below Figure 1 of that Engels patent.

I have mentioned the means of maintaining a level in the reservoir illustrated in both of the mentioned patents.

Q. Did you mention the reservoir 20 and its counterpart in Figure 5 of the Mojonnier reissue patent?

A. Reservoir—

Q. The element 20 in Engels.

A. I did this morning, but now I will mention it again.

The material is supplied into the dispensing reservoir 10 of Engels from the supply reservoir 20 of Engels. That supply reservoir 20 of Engels corresponds to the reservoir 86 of the Mojonnier reissue patent 23,830.

The flow of liquid or fluid or material from the reservoir 86 of Mojonnier reissue patent 23,830 into the
1721 dispensing reservoir 75 of that same reissue patent is controlled by means of a solenoid actuated valve 83, as shown in Figure 5 of Mojonnier reissue patent.

That structure corresponds to the arrangement shown in the Engels patent in this manner: in the Engels patent, the flow of material from the reservoir 20 into the dispensing reservoir 10 is controlled by means of the valve 22 attached to the lower end of the valve stem 24, which in turn is associated at its upper end with the valve actuating mechanism 26.

The motion of valve 22 is in turn controlled by the energization of the actuator 26, which in turn is controlled by the timing mechanism illustrated in Figure 4 of that patent.

Q. Mr. Deletzke, is there an alternative showing of something to use in place of the two probes in Engels to maintain the hydrostatic head or level of material in the container 10?

I refer you particularly to Figure 8.

A. As I recall the specifications of the Engels patent, in the specification in Engels patent it is indicated that in those instances where relatively fluid material is
1722 used in the Engels device, it may be desirable to use a float valve, such as is illustrated, or a float mechanism such as is illustrated in Figure 8 of the Engels patent to control the level of the material in the dispensing reservoir 10.

Q. Is that described in column 22 of the Engels patent, at line 20?

A. I should add to what I was saying to use those in place of the probes 42 and 44.

Now, what was the column you referred me to?

Q. Column 22, line 20.

A. Column 22, line 20, yes, the mechanism shown in Figure 8, the float valve or rather the float control mechanism of Figure 8 is referred to beginning at line 20, column 22.

Q. How does it describe the material which is suitable for use with the float valve in line 27?

A. In column 22, it says:

"As illustrated in Fig. 8, a shaft 300 is propected through and is rotatable—"

Q. No, I am sorry. It is the preceding wording.

A. All right.

1723 After referring to the use of the float which could be used in place of the probes, they state—well, I will read the whole few lines:

"Reference has heretofore been made to Fig. 8 as illustrating a form of mechanism controlled by the level of the dough or batter in the extruding chamber 50 which may be employed for the same purpose and in place of the electrodes 64 and 66, this particularly where the dough or batter being operated upon is of a more or less readily flowable character."

1724 Q. Mr. Deletzke, is there any mention in this patent of how close a control can be had of the volume dispensed, and I refer you particularly to column 6, line 56.

A. Line 56?

Q. Yes, sir, starting with:

"It will also be understood."

A. Yes. There is a reference:

"It will also be understood that the amount of variation in the hydrostatic head on the dough or batter in the extrusion chamber 10 between the limits 46 and 48 is so insignificant, when added to the air pressure applied to the extrusion chamber 10 above the dough or batter, that the scaling of the deposits produced by the machine is exceedingly accurate, and, as previously stated, when a machine of the present invention is properly constructed and operated such deposits may be maintained within 1% of a predetermined desired weight."

1725 I believe the deposit being referred to there is the amount which is metered out of the orifice 14, past the valve element 16, as shown in Figure 1, into the back pans, traveling along the conveyor below such an orifice.

Q. Mr. Deletzke, is there something in Figure 1 which does not have a corresponding element in Figure 5 of the

Mojonnier reissue patent? I refer you particularly to elements 32 and 34 of the Engels patent in Figure 1.

A. Yes. The elements 32 and 34 of the Engels patent are indications or representations of connections to supply air under pressure into the dispensing chamber 10, above the batter, and, in turn—leave out "and, in turn"—such air supplied through the pipe 32 and, at the desired time, such air may be discharged from that chamber through the pipe 34.

The introduction of the air and the discharge of the air is controlled by the valves 30 and 36, which, in turn, are controlled indirectly by the timing mechanism previously referred to.

Q. What effect would the viscosity of the material being dispensed have on the necessary operation of those two elements, 32 and 34?

A. Well, the discharge of thick dough through the
1726 orifice 14, would probably require some air pressure in addition to the hydrostatic pressure produced by the dough or batter within the reservoir chamber 10, while, if the material in the reservoir 10 were relatively flowable material, such as water, you obviously would require no air pressure to help the water flow through the orifice 14.

Q. In view of your testimony, Mr. Deletzke, would you say this Engels patent discloses a device which has a timing device?

A. Yes.

Q. A discharge orifice?

A. Yes.

Q. A hydrostatic head?

A. Yes.

Q. And accurate discharge?

A. Yes.

Q. In terms of the volume discharged. We read a portion of the specification.

A. That has referred to one per cent. I would say it is very accurate.

1727 Q. Does it have a means of controlling the hydrostatic head and maintaining it relatively constant?

A. Yes.

Q. Does it show both the probe means and a float operating switch?

A. Yes, it does. It shows the probe in Figure 1, the probe type level control, in Figure 1, and the float type of level control in Figure 8.

Q. Does it have a supply tank?

A. It has a supply tank 20.

Q. Does it have a larger tank feeding into the supply tank?

A. Yes, it does.

Q. Mr. Deletzke, after your study of this Engels patent, can you tell me, what is the relation of claim 1 of the reissue patent to this Engels patent, just generally, and I refer also to Figure 5 of the Mojonnier patent in suit as well as Figure 1—or Figure 3, excuse me.

A. I didn't get the last that you referred to.

Q. I am referring to Figures 3 and 5 of the Mojonnier patent and ask you, in the light of claim 1 of the patent, what is the relationship of the Engels patent to the

1728 Mojonnier reissue patent 23,830, with particular reference to claim 1 of that patent?

A. In a very general way, you say?

Q. Yes, just generally.

A. Well, in a very general way, the Engels patent discloses in Figure 1, discloses structural elements of the combination illustrated in Figure 1 of the Mojonnier reissue patent 23,830.

Q. Are you assuming that there is a mechanical equivalency between the Engels, shown in Figure 1 and what is described in claim 1, and I refer you particularly to:

"a member extending through said container for interconnecting said solenoid and said valve"

which language appears in claim 1 of the Mojonnier reissue patent.

A. I was disregarding that limitation because you said you wanted a comment in a very, very general way. If you want to go into detail—

Q. Let me ask you this: If you interpret claim 1 as covering the Engels patent, how do you apply that language I just read?

1729 A. Well, put it this way: If claim 1 covers Figure 5 of the Mojonnier patent, then it covers the disclosure of the Engels patent in substantially the same way because Figure 5 of the Mojonnier patent does not include the valve rod extending through the tank and so—but if you—

Q. Mr. Deletzke, I now refer you to the Newman patent, No. 711,069, which is the third one in the compilation of patents to be relied upon, marked for identification Defendants' Exhibit 6.

Could you just briefly tell me what that device appears to be?

A. Did you say Figure 6?

Q. No.

A. Did you mention any figure?

Q. No.

A. Just the general device?

Q. Yes.

A. Well, the Newman patent illustrates a drink-coin-operated drink dispensing device in which the operation of the valve for dispensing the drink is controlled by a clock mechanism which is set in motion by a coin.

The Newman patent is numbered 711,069 and is dated 1902.

1730 Q. Mr. Deletzke, let us look at the Warren patent, No. 2,515,363, which is, I believe, the third patent from the end of the book and I place on the easel a chart which has figures 2, 4, and 10 on it from this Warren patent.

By Mr. Clement: I will ask the Reporter to mark for identification this chart as Defendants' Exhibit 45.

(Thereupon said chart was marked Defendants' Exhibit No. 45 for identification.)

By Mr. Clement:

Q. Mr. Deletzke, does this Warren patent illustrate a device which has a time controlling dispensing valve?

A. Yes, it does.

Q. Is there an orifice involved in this device with the dispensing valve?

A. Yes, there is an orifice involved. I believe it is the numeral 31 which identifies the dispensing valve, from which the liquid is discharged through pipe 32 into a receptacle.

Q. Would there necessarily be an orifice in connection with the dispensing valve?

1731 A. Obviously such a dispensing valve would have an orifice.

Q. Is there a float valve in a reservoir in this device? I refer to—

A. Figure 10 of the patent which is illustrated on the chart which has just been identified as—

Q. Defendants' Exhibit 45.

A. (Continuing.) —as Defendants' Exhibit 45 discloses a float valve, I believe identified by the numeral 129 in a dispensing chamber.

1732 Q. Is there a hydrostatic head maintained in that chamber?

A. Obviously, if you use a float valve, you maintain a level in a receptacle. You of necessity have a hydrostatic head. You can't avoid it.

Q. Excuse me. Do you think you could dispense milk from that device as illustrated in the Warren patent, Mr. Deletzke?

A. Certainly.

Q. How could you do that?

A. Well, you could just replace the carbonated beverage in the tank 24 with milk and apply air pressure above the liquid or, if you like, you could move the tank 24 into an elevated position above the dispensing tank 27 and let it run in by gravity, through the float valve, out of the tank 24, through the float valve 130 into the tank which is, I believe, identified by numeral 119—Figure 10.

Q. Mr. Deletzke, did you see the demonstration of the machine, the coffee dispensing machine which has been identified as Defendants' Exhibit 3 this afternoon?

A. Yes, I did.

1733 Q. Would there be a close relation between what you have just described and that machine?

A. There would be a very close relation excepting that this one has a float valve in it while the dispensing machine demonstrated didn't have a float valve.

Q. It has an additional source of supply other than what would normally be contained in tank 27, isn't that correct?

A. That is correct.

The Warren patent shows the dispensing tank 27 from which the liquid is dispensed in measured quantities. It illustrates the supply tank 24 for the supplying of liquid to the tank 27 through the float valve 130, which float valve, in turn, maintains a predetermined level within the dispensing tank and, therefore, obviously, maintains a predetermined hydrostatic head on the dispensing valve.

Q. We were talking a moment ago, Mr. Deletzke, about using uncarbonated beverage with this device, such as milk. Is there some means which is particularly useful if you have a carbonated beverage?

I refer particularly to the tank 27.

A. Yes. The tank 27 is provided with a pressure
1734 release valve whereby you maintain in the tank 27 a relatively low air pressure, probably 3 or 4 or 5

pounds above the surface of the liquid. The purpose of that is to prevent the decarbonization of the carbonated liquid which is being handled.

Obviously, if you didn't handle a carbonated liquid, you wouldn't need the valve.

Q. You are referring to the—

A. To the pressure control valve. I believe it is identified by the numeral 121.

By the Court: We will recess, gentlemen, at this time, until 10:15 tomorrow morning.

By the Marshal: This honorable court now stands adjourned until 10:00 o'clock tomorrow morning.

(Thereupon at the hour of 4:30 o'clock p. m. on Thursday, June 2, 1955, an adjournment was taken in the above-entitled cause to Friday, June 3, 1955, at the hour of 10:15 o'clock a. m.)

1735 Chicago, Illinois,
Friday, June 3, 1955,
10:15 o'clock a. m.

Court convened pursuant to adjournment.

Present:

Mr. McCanna.
Mr. McKnight.
Mr. Pillote.
Mr. Allen.
Mr. Clement.
Mr. Voland.
Mr. Houghteling.
And other Counsel.

1736 And thereupon the following further proceedings were had herein:—

By the Clerk: Case on trial.
By the Court: Proceed.
By Mr. Clement: I would like to recall Mr. Deletzke.
By the Court: Is Mr. Kipnis here?
By Mr. Clement: No, I don't believe he is, sir.
By Mr. McCanna: That was Monday.
By the Court: Oh, yes.
All right. Go ahead.

NORMAN E. H. DELETZKE, called as a witness on behalf of the Defendants, having been previously duly sworn and examined, resumed the stand and testified further as follows:

Direct Examination (continued) by Mr. Clement.

Q. Mr. Deletzke, I think you had a statement that you wished to make about the Engels patent which we considered yesterday.

By the Court: Just a minute.
Now, what was your question?

1737 By Mr. Clement: I just asked Mr. Deletzke if he had some statement, in addition to what he said yesterday, that he wanted to make about the Engels patent.

By the Court: Yes.

By Mr. Clement: Which is this batter dispensing device.

By the Witness: Yes, sir. When you asked me how they would adjust or change the speed of the timing mechanism, I indicated that in my opinion that would be accomplished by adjusting what appeared to be an adjustable gear reducer 224.

The specification, however, indicates or uses the expression "variable speed motor." Now whether they meant that you actually provide some form of electrical control to vary the speed of the motor 222 or whether they contemplated the same thing that I expressed yesterday isn't entirely clear. Either one would work and both are commonly used in industry.

By Mr. Clement:

1738 Q. Mr. Deletzke, at the close of yesterday's testimony, we were talking about the Warren patent 2,515,363, which I think is the third from the end of the compilation.

With reference to that patent, I would like to ask you at this time how the valve 31 is operated.

A. The valve 31 of the Warren patent is operated by a cam, as illustrated in Figure 3 of the drawings of the Warren patent. The cam in turn is driven by motor 65 through the gear reducer 64.

Q. What is the function of the spring 76, which we have shown in red here on this chart, Defendants' Exhibit 45 for identification? I think it carries the number 76.

A. The function of the spring 76 is to help in closing the valve, as I recall it.

Q. Would that normally maintain the valve in the closed position if it were not moved by cam 71?

A. That is correct. The use of a spring on a valve to maintain the valve in closed position is, of course, common practice, particularly in bottle filling valves or other type of dispensing valves.

1739 Q. Is there any method disclosed in the Warren patent or mechanism disclosed which would enable one to vary dispensing time?

I call your attention to column 7, line 24.

A. Column 7, commencing at line 24 of the Warren patent, reads as follows:

"As the cam 71 recedes from the roller 72, the spring 76 co-acts with the arm 73 and link 78 to close the faucet 31, it

being understood that the timing of the mechanism is such that the faucet 31 will be open only so long as to dispense the exact amount of beverage from the uniformly pressured supply in the chamber 119, to fill the cup to a predetermined level."

1740 Q. I believe I had asked you, Mr. Deletzke, if there was any provision for changing the timing mechanism or the timing of the mechanism in the Warren patent.

A. There is no particular arrangement for changing the time, but obviously the cam—

Q. 71?

A. Yes, the cam 71 has been designed to give or produce the opening of a valve for a predetermined length of time during the rotation of the cam 71.

In the event that a different period is desired for holding the valve 31 open, it should be very simple to put on a cam of such a configuration as to hold the valve open the desired length of time.

Q. Mr. Deletzke, in your opinion would it be an inventive step to place a float, such as the float 129, shown in Figure 10 of Warren, in the machine which was demonstrated yesterday, Defendants' Exhibit 3, the coffee dispensing machine?

By Mr. McCanna: Your Honor, I object to that question. It calls for a legal conclusion, an inventive step.

By the Court: Oh, he may answer.

By the Witness:

1741 A. In my opinion it would require no invention whatsoever to put a float valve in any receptacle in which you want to maintain a level. It is the common practice, I would say, in every milk bottle filler of the automatic type, automatic gravity type, that is on the market today and has been for many years.

By Mr. Clement:

Q. Mr. Deletzke, I now refer you to the Ashkenaz patent, No. 2,254,833.

By the Court: Where is that?

By Mr. Clement: It is about the sixth from the end of the book, your Honor. Ashkenaz, 2,254,833.

By Mr. Clement:

Q. Does this device as illustrated in Figures 1 and 2 of the Ashkenaz patent have a solenoid controlled orifice valve?

A. Yes, it does.

Q. Would you identify that, please? I refer you to Figure 2.

A. Figure 2, yes. Well, the solenoid, the valve element as such looks like a needle valve to which the lead line from the numeral 61 extends immediately below the heavy
1742 solenoid armature element 60.

Q. Does this device have an electric timer? I refer you to Figure 1.

A. Yes, the electric timer is illustrated in Figure 1 of the drawings, and I presume you may say it is generally identified by the numeral 24. It is the unit that looks something like a small carrying case.

Q. Continuing with reference to Figure 1, is there a supply tank?

A. There is a liquid supply tank identified by the numeral 22 at the upper left-hand portion of Figure 1 of the drawings of that patent.

Q. Turning back now to Figure 2, does this mechanism as shown there have a constant hydrostatic head at any point?

A. The mechanism shown in Figure 2 is so arranged as to maintain a constant hydrostatic head of liquid in the small receptacle 75, immediately below the supply receptacle 22, and that is the arrangement commonly used in the ordinary water fountain where the water is supplied by means of a jug, a five-gallon jug.

Q. Is that commonly known as a water cooler?

1743 A. That is commonly known as a water cooler, and is universally used.

Q. And it is my—excuse me. Go ahead.

A. They are even used in some of these refrigerated types of devices where the water is supplied from day to day by means of a jug, and in each instance the level of the water is maintained in the small receptacle below the supply jug in precisely the same manner as is shown in Figure 2 of the drawings.

That, of course, is the same practice that is used in chicken watering devices, how watering devices, and that type of thing.

Q. Just exactly what happens if liquid is dispensed from the cup 75, for example?

A. As liquid is dispensed from the cup 75, the level drops slightly until the pressure of the liquid in the jug 22 is sufficient to force a little more water out of the mouth

22a, and as soon as the level of the liquid in the receptacle 75 again reaches the mouth of the jug 22, which is identified by the numeral 22a, the flow of the liquid stops. In that fashion the level of the liquid is maintained uniformly in the receptacle 75.

1744 Q. Does anything replace the liquid in the jug 22 as it is dispensed therefrom?

A. Does any—well, the liquid is replaced by air bubbling up through the mouth of jug 22, which is drawn in as the level of the liquid in the receptacle 75 leaves or loses contact with the end of the mouth 22a.

Q. Would you please now turn to the first patent in the book, the Purvis, No. 517,127?

A. What number did you say?

Q. 517,127, the Purvis patent, the first patent in the book of patents.

I will ask you, Mr. Deletzke, if in the Purvis patent there is a solenoid control.

By the Court: I was looking at this Ashkenaz.

By Mr. Clement: I beg your pardon?

By the Court: I was looking at this Ashkenaz. What are you talking about now?

By Mr. Clement: The first patent in the book, your Honor, the Purvis patent.

By the Court: Yes.

By Mr. Clement:

Q. And I ask you, Mr. Deletzke, if that patent
1745 discloses a device having a solenoid controlled orifice valve.

A. Yes, it does

Q. Does it have an electrically-operated timer?

A. The electrically-operated timer is illustrated in Figure 6 of that patent.

Q. Referring to Figure 2, Mr. Deletzke, could you briefly describe the mechanism that is shown there?

A. In Figure 2, starting from the top of the drawing, the solenoid, the solenoid armature illustrated and identified—illustrated, has two electro-magnets and the follower plate identified generally, so far as I can tell here, by the numerals C_1F^2. They are the entire top portion of Figure 2 of the drawing. The valve stem F^1 extends downwardly from the solenoid arrangement, through the receptacle A, down to the valve element identified by the numeral—I believe it is F and the valve element, in turn, is adapted to

be seated in the valve orifice which appears to be identified by the letter C^1.

So, you do have the solenoid, the solenoid armature, the valve stem and the valve, and the valve, F^1, in this case, extends through the dispensing receptacle A from 1746 which the lubricant is dispensed.

Q. Would the language—and I am reading from claim 1 of the patent in suit:

"a solenoid mounted on said container for operating said valve, a member extending through said container for interconnecting said solenoid and said valve * * *"

Would that language be applicable to the structure you have just described?

A. That would apply exactly to the structure illustrated in Figure 2 of the Purvis patent in which the solenoid is mounted on the top of the receptacle A. The valve stem F^1 extends through the receptacle and the valve and valve orifice are depending from the bottom of the receptacle.

1747 Q. What is the date of this patent?

A. The date of the patent is March 27, 1894.

Q. Would the timing device which is shown in Figure 6 of this patent operate to energize the solenoid and thereby move said member, move the valve member and the rod extending through the tank A to operate the valve, whereby a substantially constant volume of liquid would be dispensed each time the solenoid was energized?

I am quoting partially from the Claim 1 again.

A. From Claim 1 of the patent in suit?

Q. Yes. I am just asking you what the actual operation would be in connection with the timer.

A. Obviously the purpose of the timer is to energize the solenoids G and the purpose of the device is to dispense predetermined quantities of lubricant from the receptacle A into the conduit C, to be directed to wherever the lubricant was to be used.

Q. There is a slight difference, however, is there not, in the manner in which this dispenses, in the so-called time control flow in the patent in suit?

A. This is a lubricating device and in lubricating devices, you don't dispense large quantities of 1748 liquid. They are small quantities of liquid that are dispensed.

Q. And there is a measured shot of lubricant?

A. That is correct. That is the conventional procedure

on the lubricating device used on large stationary machinery, usually. They dispense a few drops or a small quantity of lubricant into a pipe that leads the lubricant to various parts of the machine.

Q. Was this patent cited by the Patent Office during the prosecution of either the original Mojonnier patent or the reissue patent in suit?

I refer you to the index at the front of the book.

A. Yes, I am looking at it. It was not cited by the Patent Office.

Q. Mr. Deletzke, I now refer you to the Bowman patent, No. 2,462,019, which, I believe, is the fourth patent from the end of the book. That is the Bowman patent No. 2,462,019, the fourth from the end of the book.

A. Yes, I have it.

Q. Does this patent disclose a so-called probe type control for the level of the liquid in a container, and I refer you particularly to Figure 3.

1749 A. Yes, it does. In Figure 3 the probes are identified by the numerals 400 and 401.

Q. What type of container is this container, if you recall? Does this handle the carbonated liquid?

A. You mean—well, the device generally, as I recall, is for the dispensing of carbonated liquid.

Now, if you will ask just what this particular container is, numeral 409, I would have to check.

1750 Q. In any event, there is a head maintained in this container, a head of liquid, the level of which is regulated, is it?

A. That is correct, and that is the purpose of the probes, 400 and 401.

Q. Does this patent have a timed control?

By the Court: What figure are you looking at?

By the Witness: Figure 3, your Honor.

By Mr. Clement: Would you keep your voice up, Mr. Deletzke, please?

By the Witness: All right.

By the Court: Go ahead.

By Mr. Clement:

Q. Does this patent disclose a time controlled solenoid operated orifice type dispensing valve?

I refer you to column 10, lines 6 to 10.

A. Column 10, lines 6 to 10 of the Bowman patent No. 2,462,019 reads:

"It will be clear that the quantity of liquid flowing through any such valve will depend directly upon the time the valve is open, the gas pressure in the feed
1751 tubes remaining constant as previously described."

Q. And I also refer you to line 64 in column 9.

A. Starting at line 64, column 9, it reads:

"as previously stated, a set of solenoid-operated time-control valves 60 are provided for individually regulating the amount of syrup fed to each of the syrup delivery nozzle tubes 801, 802 and 803."

Q. And the next sentence?

A. (Reading.)

"Said valves, comprising a conventional type of poppet valve 601, are of known construction and are therefore shown somewhat diagrammatically in Figs. 1 and 2."

Q. Mr. Deletzke, is it common practice in many fields to use valves of this character we have just been discussing?

A. Solenoid-operated valves?

Q. Yes.

A. Solenoid-operated valves are used very extensively. One very common use is in the automatic dish washers
1752 that are commonly used in homes today, in which the water is measured into the dish washer by time-controlled solenoid-operated valves. The same thing applies to automatic laundry, household type laundry machinery, and the amount of water introduced, for example, into a dish washer is determined by a timing mechanism and a solenoid-operated valve and they are always equipped with an orifice for regulating the measured flow of the wash water and rinse water into the washing machine, for example, dish washer.

Q. Is there a constant head of liquid in such machines?

A. A relatively constant head is provided by the pressure of the city water.

I presume, if you would like to have a more accurate head, it would require no ingenuity to apply a pressure-regulating valve of the type that is used on all types of refrigerating machinery and, for that matter, in hydraulic machinery.

Q. Is the Bowman patent that we have just been discussing, No. 2,462,019, a device comparable to the device which was demonstrated here yesterday, the coffee dis-
1753 penser, Defendants' Exhibit No. 3 for identification, generally speaking?

A. Very generally speaking, I would say it was. It happens to be considerably more complicated, but, it is a beverage dispensing device using a time-controlled solenoid-operated valve.

In fact, the Bowman patent, as I recall, also uses float valves, as shown in Figure 2.

1754 Q. The method of dispensing the various components that make up the beverage, does that compare with the coffee dispensing machine we saw yesterday?

A. Generally, yes, to dispense different components of the drink into the cup by means of the time controlled solenoid actuated valve.

Q. And is it both desirable and necessary to have a relatively accurate amount of each component dispensed?

A. Well, the components cost money. If you want to make money by selling drinks, you have to measure them carefully.

Q. Does it affect the character of the drink if you don't have the proper relative amounts of components?

A. It might also affect the character of the drink, putting in the wrong proportion of the components of the drink.

Q. So the problem of an accurately dispensed volume is present in these beverage dispensing machines, is that correct?

A. I would say it is necessary to have it dispensed accurately.

By the Court: In Figure 1 in that Bowman pat-
1755 ent, where is the solenoid valve, 200 and 201?

By Mr. Clement: I think they are in a group labeled 60, above the valve 80 on the righthand side of that figure, your Honor. I think those boxes labeled with the V's.

By the Court: V's?

By Mr. Clement: Yes.

By the Court: Those are the solenoid valves?

By Mr. Clement: That is correct.

By the Court: The solenoid valves, are they 601 and 701?

By the Witness: Yes.

By Mr. Clement: I believe so.

By the Court: Is that right?

By Mr. Clement:

Q. Is that right, Mr. Deletzke?

A. They have two sets there. I want to take a look and see.

Q. I call your attention to column 11, Mr. Deletzke, line 9.

A. Yes.

"As the piston of cylinder 132 reciprocates—"

I am looking at the wrong column.

1756 Q. This is column 11.

A. Yes. Just a minute. I have got it.

"—each of the carbonated water delivery tubes 809, 810 and 811 communicate respectively with its own solenoid-operated time-control valve 701 which is similar in construction and operation to that of the valves 601 (or 610) previously described. Each of said water valves 701 has an in-feed pipe 705 which communicates with a main 703, forming the terminus of the carbonated water supply pipe 385 after same leaves the chilling tank 30. A suitable hand-set valve 704 may be provided in the pipe 703."

By Mr. Clement: I think this differs slightly, your Honor, from the coffee dispensing machine in that the dispensing nozzles in the Bowman machine are gathered together.

By the Court: Yes.

By Mr. Clement: At numeral 80, whereas the valves are up above.

By the Court: Yes. Now, where is the float valve? Where is it in that Figure 1?

By the Witness: The float valve—

1757 By the Court: 400 and 401?

By the Witness: The float valves are in the tank 50, 51 and 52, immediately to the left of the grouping of the valves that you were looking at a minute ago.

By the Court: Yes, but what is this 400 and 401?

By the Witness: Those are the probes 400 and 401. They are the probes.

By the Court: Why don't they have a line of floats between them?

By the Witness: Well, the—

By the Court: It doesn't work?

By the Witness: No. The probes would be used to replenish the supply and can be set to regulate within given limits.

By Mr. Clement:

Q. Is it true that they use the liquid as a conductor between those probes and the resistance of the liquid varies as the level goes up and down?

A. That is correct. The probes work on the principle of conducting—of using the fluid or the liquid in the receptacle as a conductor between the probes.

Q. The floats 520 and the comparable floats on the
1758 right-hand side of the Mojonnier container are merely shut-off valves, are they?

A. That is correct. They are used to indicate or rather, to shut off the operation of the machine when the supply of, we will say, for example, the syrup in the syrup receptacle has reached the minimum depth under which they want to operate.

1759 Q. But there is an extra supply of carbonated water, is that correct?

A. That is correct.

By the Court: Is there anything there for maintaining a head, for maintaining a constant head?

By the Witness: Well, the level of the carbonated liquid is maintained by the probes 401 and 400 in the receptacle 35. Roughly, what is indicated in the drawing—it may vary through a range.

By the Court: I don't see how that works.

By Mr. Clement:

Q. I call your attention, Mr. Dele'zke, to column 5, line 61, or you can begin on line 45 if you desire.

A. I will begin at line 45:

"The invention provides means for preventing the supply of carbonated water in the tank 35 from falling below a desired predetermined level and for supplying make-
1760 up water to the tank to be carbonated as required. This feature of my invention avoids the use of any moving parts such as floats, levers, or the like in the carbonating tank. It is exceedingly accurate and certain in its operation. It is likewise relatively inexpensive and simple in construction. As embodied I employ a control circuit in which the carbonated water acts as an electric conductor, the circuit being broken when the level of the carbonated water falls to a point where the flow of current through it is insufficient to maintain a closed circuit."

In other words, your Honor, the level, according to the description there, is maintained at the point where the

liquid between the probes provides a sufficiently good conductor to actuate the control mechanism. Obviously that could be set so that the control mechanism would function as soon as the liquid established a contact between the two probes, or it could be set so that there would have to be several inches of liquid between the two probes, de-
1761 pending on the resistance to the flow of the applied current provided by the liquid between the probes.

Q. I think the next paragraph explains that, Mr. Deletzke.

A. Continuing on line 60 of column 5 of that patent:

"The position of the electrodes is such that when the carbonated water in tank 35 remains above a predetermined level A, the resistance of the electrolytic current path between the electrodes will be sufficiently low to permit passage of enough current to maintain energization of the relay 415 and thereby hold open the circuit for motor 26. However, when the water reaches level A, the relay 415 will become deenergized and thereby switch 416 will be closed, thus causing the water to flow into the tank through spray 360 and simultaneously initiating rotation of agitator shaft 375."

By Mr. Clement: In effect, your Honor, carbonated
1762 liquid between those two probes is the variable resistance.

By the Court: Yes, I see.

1763 By Mr. Clement:

Q. Mr. Deletzke, will you now turn to the Larsen patent, No. 2,164,530.

By the Court: What is the number?

By Mr. Clement: 2,164,530. That is approximately in the middle of the book. I think it is the second tab in the second tier of tabs.

By the Court: Yes, I have it.

By Mr. Clement:

Q. What type of dispensing mechanism or filling machine is disclosed in that patent, Mr. Deletzke?

A. The Larsen patent 2,164,530 discloses a conventional type of automatic milk bottle filler and capper, a type which is very commonly used and has been for many years in the dairy industry.

Q. Is this a gravity filler?

A. And it is a gravity type of filler.

Q. Referring to Figure 2, what type of valve is shown there? I think it is labeled 9 generally.

A. That is a sleeve type spring loaded valve, also of the kind which has been used for many years on the gravity type of milk bottle fillers.

Q. How does that valve operate?

A. The operation of the valve is accomplished by
1764 placing a bottle, referring now to Figure 2 of the drawing, placing a bottle on the pedestal, generally identified by the numeral 10, immediately below the valve 9.

As the filler table, which includes the pedestal 10, rotates about the shaft 13, the pedestals 10 are raised by the engagement between the cam and cam follower in the immediate vicinity of the numeral 15. Both the cam and cam follower are unnumbered.

As the pedestal is thus raised by riding up the cam, the mouth of the bottle will engage the bottom portion of the valve 9 and as it continues to raise will move the outer sleeve of the valve upwardly compressing the unnumbered spring, illustrated immediately adjacent the end of the lead line to the Figure 9, thereby opening the valve and permitting the milk to drain from the reservoir 1 through the valve 9 into the bottle supported by the pedestal 10. That draining continues as the pedestal 10 rides around on the circular cam built into the base of the machine.

Q. How are the bottles actually filled?

A. They are filled by the flow of the liquid under the influence of gravity from the reservoir 1 through
1765 valve 9 into the bottle.

The filling of the bottle is expedited by provision of a vent tube which is also unnumbered in this drawing, which extends up through the reservoir 1 and permits the air to escape from the receptable, thus permitting the liquid to run more freely into the receptacle.

Q. Mr. Deletzke, I hand you an exhibit marked Defendants' Exhibit No. 10 for identification, which is a model of a valve, and ask you to briefly make a comparison between this valve and the valve in the Larsen patent.

A. The valve shown in the Larsen patent consists of two telescoped tubes, tubular elements. The outer telescoped element, including the valve seat or orifice, the valve element, is attached to the lower end of the unnumbered vent tube.

In the model—

Q. Just turn that shaft. We removed the spring for

purposes of demonstration. We will put the spring back on the post here.

A. As the valve sleeve in this instance is lowered, the valve element which is attached to the valve stem, which extends upwardly through the valve mechanism and
1766 into the telescoped sleeve, descends approximately an eighth of an inch, and is then stopped by a key device.

The valve sleeve continues its downward movement, thereby moving the valve sleeve or the valve orifice away from the valve element within the valve sleeve, thereby opening the valve and permitting the liquid to discharge from the liquid reservoir through the passage within the telescoped sleeves, past the valve element, and out through the orifice at the bottom of the outer sleeve.

In this particular arrangement the opening of the valve, that is the downward motion of the outer valve sleeve, is accomplished by the motion, the movement of a spring loaded linkage, which is splined to the valve sleeve.

1767 Q. Mr. Deletzke, is that the linkage shown here in this chart in orange?

A. That is the linkage shown in orange on the chart—does it have any identification?

By Mr. Clement: I will have it identified right now. Will the Reporter please mark this chart as Defendants' Exhibit 46 for identification?

(Thereupon said chart was marked Defendants' Exhibit No. 46 for identification.)

By Mr. Clement: Your Honor, I might say in that compilation which I think you have before you, this is tab 12 of that book of drawings.

By Mr. McCanna: We do have an objection to the use of this model, Defendants' Exhibit 10, in that it is not the accused machine, and we believe there are variations and differences.

By the Court: Well, it is used for explanatory purposes. You can point out any differences.

By Mr. Clement: This is the model of the machine
1768 that is presently being made by the defendants. I will have to check the stipulation to see whether it falls within what we stipulated as the accused device or not.

By Mr. Clement:

Q. Will you continue to describe the operation, or have you finished?

A. No, I haven't.

Q. Would you like this drawing?

A. I think it would be clearer if I pointed them out on the chart because it is all enclosed in the valve sleeve here, and you can't tell what I am talking about.

By Mr. Clement: Excuse me, Mr. Deletzke.

The stipulation we entered into with Mr. McCanna relative to the structures that were alleged to be infringing, reads that:

"The structure alleged to be an infringement of the claims specified in paragraph 1 hereof is that incorporated in the machine bearing serial number MJSA 3028—"

which I believe is that machine over there—

1769 "being made and sold by the Brasile defendants."

By the Court: Is that No. 40?

By Mr. Clement: Plaintiff's Exhibit No. 40, yes.

"being made and sold by the Brasile defendants at the time of filing of this lawsuit, and the machine now being made and sold by the Brasile defendants which is represented in part by the Defendants' Exhibit 10."

By Mr. Clement:

Q. Will you proceed.

A. In the operation of the valve illustrated in Defendants' Exhibit 46 for identification, the solenoid is used to effect the rotation of the shaft 92. Rotation of the shaft 92 in turn moves linkage 93, 94 and 85 in such a fashion as to cause the lefthand end of the linkage 85 to descend and to pivot about the pivot—

Q. 86?

A. 86. In such pivoting about the pivot 86, tension is applied to the spring 88, the tendency of which ten-

1770 sion spring is to maintain the end of the linkage 85 in its uppermost position.

As the rotation of the shaft 92 continues, the spring 88 is tensioned, the lever 85 is caused to pivot in such a fashion that the splined end thereof, identified by the numeral 80, and which engages the flange 69 on the outer sleeve of the valve mechanism, causes the outer sleeve to descend.

1771 Q. Is that the sleeve 51?

A. Yes, that is the sleeve identified by the numeral 51. As the sleeve 51 descends, the valve 56, which is seated in the opening in the bottom of the sleeve 51—

Q. Is that the seat 55?

A. —which is the seat 55, descends with the sleeve 51 a short distance until the key 66 engages the bottom of the reservoir 10.

Q. Is that key shown in Figure 4?

A. The key 66 is shown in Figure 4 of Defendants' Exhibit 46 for identification.

Q. Is that more or less in the nature of a hairpin that goes over the shaft?

A. That is commonly referred to as a hairpin clip, and is used in this type of device to enable the easy assembly and disassembly of the valve, which has to be cleaned frequently.

It is merely a friction type of hairpin-like key, which is usually clipped either below a shoulder or into a groove in the element to which it is to be attached.

Q What does that pin abut when the valve drops?

1772 A. The pin 66 abuts against the bottom of the tank 10. The particular place of abutment is not indicated.

Q. Would Figure 4 show that?

A. Figure 4 of Defendants' Exhibit 46 illustrates the manner in which the pin 66 overlaps the upper portion of the valve mechanism as such, and abuts against the bottom of the tank 10. I believe here the bottom of the tank in Figure 4 is identified by the numeral 43.

Q. I believe it is 37.

A. 37, yes.

Q. 43 is part of the valve.

A. I see. It is identified by the numeral 37.

Up until this point the valve has continued to be closed for the reason that the valve element 56 has remained seated over the valve orifice 55.

Q. Does it drop with the sleeve?

A. As I mentioned before the valve 56 and the valve stem 58 drop with the sleeve 51. The dropping is by gravity.

As the pivoting of the shaft 85 continues the splined end thereof, No. 80, continues to move the valve sleeve 51

1773 downwardly. As soon as the key 66 engages the bottom 37 of the tank 10, the motion of the valve element

56 is stopped and the continuing motion of the valve sleeve 51 commences the opening of the valve orifice normally sealed by the valve element 56.

The entire procedure or operation of lowering the sleeve 51 is accomplished against the tension of the spring 88, which normally tends to pivot the lever 85 in the direction opposite to that which it is pivoted by the actuation of the solenoids in the manner which I have described.

When the solenoid which has rotated the shaft 92 in a counter clockwise direction, as viewed in Defendants' Exhibit 46 for identification—

What did I say there?

(Whereupon the record was read as above recorded.)

By the Witness:

A. (Continuing.) —is deenergized, the tension of the spring 88 acting on the lever 85 pivots the lever 85 in the opposite direction from the manner in which it was pivoted during the opening operation, thereby causing the splined end 80 of the lever 85 to engage the flange 69 of
1774 the sleeve 51, and raise the sleeve 51 upwardly towards the initial starting position in which the valve is closed.

During such upward motion of the sleeve 51 the orifice, the dispensing orifice of the valve, is sealed when the valve element 56 engages the valve seat 55, and the slight continuing upward motion after the valve orifice has thus been sealed raises the valve element 56 and its associated valve stem until the flange or collar 65 on the stem 58 again engages the spider-like element, generally identified by the numeral 61, which is secured to the bottom of the tank 10, which forms the upper part of the inner valve sleeve.

The valve as such is very similar to the conventional type—the valve as such, in so far as the telescoping sleeves are concerned, is very similar to the conventional type of telescoped sleeve valve normally used in milk bottle filling industry.

Another point of similarity is that in the valve illustrated in Defendants' Exhibit 46, the opening and closing of the valve is affected in part by the spring 88, which has a bearing on the motion of the movable sleeve of the two telescoped sleeves.

1775 Q. How does that valve compare with the valve identified by the numeral 9 in the Larsen patent? Is it the reverse, substantially?

A. It is substantially the reverse in operation in that in the Larsen valve, the sleeve is moved upwardly while in the valve illustrated in Defendants' Exhibit 46, the outer sleeve is moved downwardly.

In both instances the inner sleeve is fixed to the bottom of the tank, which is the common practice in that type of spring-loaded telescoped sleeve valve for milk bottle fillers.

Q. Is there a means of varying the speed of filling with respect to the Larsen device?

A. It is not numbered as such in the Larsen device, and I don't believe it is even referred to, but it is the very common practice to equip the automatic rotary type of milk bottle filling machines with variable speed drives so that the machine can be used for filling quart bottles, pint bottles, half pint bottles, and so on.

Then if you will refer to Figure 1 of the Larsen
1776 patent, there is illustrated a motor, and what obviously is a variable speed arrangement for a V belt type of drive.

In Figure 2 of that same patent an arrangement is shown for tightening the belt. But it is very common practice to equip those machines with variable speed drives so that the machine can be speeded up to fill small bottles, and slowed down to fill large bottles.

Q. I refer you now, Mr. Deletzke, to the Fagen and Mojonnier patent, 2,147,366.

By the Court: Suppose we take a few minutes recess.

(Whereupon a short recess was taken.)

By the Court: What was that patent?

By Mr. Clement: I think, your Honor, we will talk about a different one for the moment. I had referred to the Fagen patent, but I am going to refer to another.

I would like to take a moment to introduce into evidence a few exhibits.

I would first of all offer into evidence Defendants' Ex-
hibit 1 for identification, which is the packing and
1777 shipping ticket referred to in the Melikian deposition of yesterday, the Melikian deposition being marked for identification as Defendants' Exhibit 43.

I would like to offer now the packing and shipping ticket as Defendants' Exhibit 1.

By the Court: Any objection?

By Mr. McCanna: No objection.

By the Court: It may be received.

(Said document, so offered and received in evidence, was marked DEFENDANTS' EXHIBIT NO. 1.)

By Mr. Clement: I would like to offer the invoice which was introduced in the Melikian deposition of the Rudd-Melikian Company, which was marked for identification Defendants' Exhibit 2.

By the Court: Any objection?

By Mr. McCanna: No objection.

By the Court: It may be received.

1778 (Said document, so offered and received in evidence, was marked DEFENDANTS' EXHIBIT NO. 2.)

By Mr. McCanna: Except that I am going to object to what they are attempting to prove by that.

By the Court: What is that?

By Mr. McCanna: I am going to object at the proper time, when we discuss this, as an attempt to prove a prior use there, a prior sale.

By the Court: What is the offer now?

Have you an offer pending?

By Mr. Clement: There is no offer pending.

I would like to offer Defendants' Exhibit for identification No. 3, which is the coffee dispensing machine which was demonstrated yesterday, manufactured by the Rudd-Melikian Company, and I ask the Reporter to mark that as Defendants' Exhibit 3.

By the Court: Any objection?

By Mr. McCanna: No objection.

By the Court: It may be received.

1779 (Said coffee dispensing machine, so offered and received in evidence, was marked DEFENDANT'S EXHIBIT NO. 3.)

By Mr. McCanna: Except as to its relevancy and materiality.

By the Court: Overruled.

By Mr. Clement: I would like to offer the soft copy of the Melikian patent 2,682,984, marked for identification Defendants' Exhibit 4, and ask the Reporter to strike the identification.

By Mr. McCanna: No objection.

By the Court: It may be received.

(Said document ,so offered and received in evidence, was marked DEFENDANTS' EXHIBIT NO. 4.)

By Mr. Clement: I would like to offer the deposition of Mr. Khoren Melikian of April 29, 1955, identified as Defendants' Exhibit 43.

By the Court: It has been read, hasn't it?

By Mr. Clement: I am sorry, your Honor, it has.

1780 By the Court: Hasn't it been read?

By Mr. Clement: Yes, it has, your Honor.

By the Court: Well, there is no need to offer it.

By Mr. Clement: I believe there is a certified copy of the file history of the original patent and of the reissue patent on your desk, your Honor.

By the Court: Yes.

By Mr. Clement: I would like to offer those at this time. One of them has been marked, I believe, and the other has not been.

I will offer the certified copy of the file history of the original patent as Defendants' Exhibit 7.

By the Court: It may be received.

(Said document, so offered and received in evidence, was marked DEFENDANTS' EXHIBIT NO. 7.)

By Mr. Clement: I will offer the certified copy of the file history of the reissue patent as Defendants' Exhibit 8.

By the Court: It may be received.

1781 (Said document, so offered and received in evidence, was marked DEFENDANTS' EXHIBIT NO. 8.)

1782 By Mr. Clement: I will offer the physical exhibit of the valve mechanism incorporated in the present machine of defendants which has been marked for identification as Defendants' Exhibit 10 and ask that it be marked as Defendants' Exhibit 10.

By the Court: It may be received.

(Said valve mechanism, so offered and received in evidence, was marked DEFENDANTS' EXHIBIT NO. 10.)

By Mr. Clement: I would like to offer this chart marked for identification as Defendants' Exhibit 45 and ask that it be marked as Defendants' Exhibit 45.

By the Court: It may be received.

(Said document, so offered and received in evidence, was marked DEFENDANTS' EXHIBIT NO. 45.)

By Mr. Clement: It is the Warren patent chart. I would like to offer the chart which has been marked for identification Defendants' Exhibit 46 showing the part of the structure of the defendants' present machine, as Defendants' Exhibit 46.

1783 By the Court: It may be received.

(Said document, so offered and received in evidence, was marked DEFENDANTS' EXHIBIT NO. 46.)

By Mr. Clement:

Q. Mr. Deletzke, will you turn to the Hothersall patent 2,222,617, Hothersall.

A. I have it.

Q. What type of machine is that illustrated in that patent, Mr. Deletzke?

A. That is the American Can Company's patent for filling paper milk bottles.

By the Court: Two million—

By Mr. Clement: Two million, two thousand two hundred and twenty-two.

By the Court: 617?

By Mr. Clement: 617, Hothersall.

By the Court: Oh, it is Hothersall?

By Mr. Clement: Yes.

By Mr. Clement:

Q. And how did you identify that, Mr. Deletzke?

A. I stated that that was the patent belonging to the American Can Company and pertains to an invention in a machine for filling paper milk bottles.

1784 Q. What type of machine is it, generally?

A. It is a measuring type of bottle filler of the automatic rotary construction.

Q. When you say measuring type, how do you define that, and I refer you to Figures 4 and 5, particularly?

A. As illustrated in Figures 4 and 5 of that patent, it will be observed that the filling reservoir of the machine is equipped at its outer periphery of the reservoir, is equipped with a series of measuring compartments generally identified by the letter C.

In the operation of the machine, the compartment C is raised. Milk flows from the main body of the reservoir into the compartment C, through the bottom thereof. The bottom has been lifted away from the seat 63 and the milk continues to flow into the compartment C until the level of the milk in that compartment, particularly in the neck of that compartment close to the end of the lead line, associated with the numeral 92, reaches the level of the milk in the reservoir.

When the compartment has thus been filled, a measured quantity of milk may be emptied from that compartment by raising the valve 68 from the valve seat in the element
1785 64 immediately below the valve 68 and the milk then discharges through the element 64 and through the

slot 65 and squirts against the side of the interior of the receptacle B.

The actuation of the valve 68, the valve stem, is controlled by a cam mechanism generally indicated or illustrated on the right-hand side of Figure 5 of the drawing of the Hothersall patent and a similar cam or mechanism illustrated in that same general location, is used to move the measuring compartment C up and down during the filling operations.

1786 Q. Is there any peculiarity about the dispensing valve or nozzle 64?

A. Well, the dispensing nozzle 64 as shown in Figure 5 of that drawing, as far as it appears to me, is identical with the dispensing nozzle on the—I will take a look at one of these machines.

I should say, it is substantially identical to the discharge nozzle on the valve of the Plaintiff's Exhibit 39 and the purpose of that discharge nozzle is to prevent the foaming of the milk as it is squirted into the receptacle B by causing the stream of milk to impinge against the side of the container and run smoothly down the side of the container, thereby preventing the formation of foam.

Q. Does this Hothersall device have a float valve?

A. Yes, the Hothersall device, as clearly illustrated in Figure 1 of the drawing, has a float valve—well, at least the float is identified by the numeral 56. I can't—the valve appears to be identified by the numeral 52 but, as is shown clearly in the upper central portion of Figure 1 of the drawings, and that float valve is used in the Hothersall machine as it is used in all other types of gravity

1787 milk bottle filling machines: To maintain an accurate level of milk in the reservoir generally identified by the numeral A in Figure 1 of the drawings.

Q. I call your attention to page 2, the first column, line 67 and ask you if that is the description of the valve you have just described.

A. Starting at line 67, page 2, column 1 of the Hothersall patent, it reads:

"The level of the milk in the tank A is preferably maintained at a predetermined height by a suitable sleeve valve 55 which surrounds the lower end of the inlet pipe 51. The valve is attached to a float 56 supported by the milk in the tank. Thus as the milk level rises and falls the float moves the sleeve valve and thereby covers or uncovers the port 52 for regulating the flow of milk into the tank."

1788 That is a very common expedient, as far as I know, at least on every rotary type of gravity milk bottle filling machine I have seen, they have had the float valve.

Q. I call your attention now, Mr. Deletzke, to the Lippold patent No. 2,171,757 which is approximately in the middle of the book.

By Mr. Clement: The third tab in the second tier of tabs, your Honor.

By the Witness: I have it.

By Mr. Clement:

Q. What type of filler would that mechanism be used with, Mr. Deletzke?

A. That would be the type of valve used on a gravity type milk bottle filling machine similar to the machine shown in the Larsen patent 2,164,530. Very generally speaking, it is the same type of valve. In other words, there are two telescoped sleeves with a spring load to maintain the valve, to maintain it shut.

That Larsen patent is a Creamery Package Company patent and the Lippold patent is a Cherry-Burrell Company patent.

Q. Does the Lippold have an anti-splash arrange-
1789 ment?

A. The Lippold patent does have an anti-splash arrangement, as illustrated in Figure 4 of that patent. The triangularly shaped element 37 immediately above the valve element 33 has for its primary purpose, the prevention of the flow of liquid over a portion of the valve seat, so as to prevent the formation of what is referred to as a tassel below the valve element, which type of tassel will seal the vent tubes and prevent the escape of air by interrupting the flow of liquid on one side of the valve element and the tassel can't be formed by the film of liquid, and then the air can escape.

The valve, of course, is formed in such a fashion as illustrated in Figure 2, so that the discharging milk—or, so that the milk discharged from the valve will squirt outwardly against the side of the bottle and flow down with the least possible formation of foam.

Q. Its primary purpose is to permit the air to pass upwardly as the liquid being dispensed passes downwardly, is that correct?

1790 A. The primary purpose of the deflector 37 is to so control the flow of the liquid as to save an air

passage for the air and permit the air to escape from the bottle.

1791 Q. And if the air does not escape, what happens?

A. Well, if the air does not escape, you fill the bottle partially and then the filling will stop.

Q. And is there foam created by that, or splashing?

A. I don't think you—I don't get your question.

Q. You have identified it as an anti-splash element. I am just trying to clarify it.

A. Well, the milk rushing into the bottle invariably produces foam.

Q. I am just questioning whether your characterization of that element 37 as an anti-splash element is quite correct or whether it is for some other purpose.

A. Well, it actually—it probably shouldn't be characterized as an anti-splash element, the element 37.

It is an arrangement to permit more, or the better controlled escape of the air from the bottle. The anti-splash and the formation of foam in the bottles are generally referred to as the same thing. That is the problem in filling bottles, to prevent the formation of the foam so as to be able to completely fill the bottle with liquid and not have the bottle leave the filling machine with a slight layer

1792 of foam at the top.

With that in mind, it is probably more correctly described as a baffle for controlling the discharge of liquid so as to enable the escape of the air rather than an anti-splash device.

Q. But the nozzle you previously described in the Hothersall patent is an anti-plash nozzle, is that correct?

A. The Hothersall patent obviously is for the purpose of directing the stream against the side of the bottle so as to prevent the splashing of a stream of liquid into the liquid accumulated in the bottom of the reservoir.

Q. Was either the Hothersall patent we just mentioned or this present Lippold patent cited by the Patent Office during the prosecution of the Mojonnier original patent or the reissue patent?

A. Neither the Hothersall patent No. 2,222,617 or the Lippold patent, No. 2,171,757, were cited by the Patent Office.

Q. Will you please turn now to the LaPorte patent No. 1,166,607.

What form of bottle filling mechanism is disclosed there, please?

1793 A. The LaPorte patent which is mentioned, discloses a measuring type of gravity milk bottle filler.

Q. Does it have a float valve?

A. The LaPorte patent in Figure 1 illustrates the float valve, generally identified by the numeral 5, for maintaining a predetermined level of liquid in the reservoir 1.

Q. What type of dispensing valve does it have?

A. The dispensing valve is illustrated in its retracted position in Figure 1, which is a spring loaded dispensing valve and is illustrated in its extended position in Figure 2, wherein there is illustrated the manner in which the liquid is dispensed into the bottle.

There, you will observe that the end of the dispensing nozzle with the orifices 23 are extended close to the bottom of the bottle, the purpose thereof being to empty the liquid as close to the bottom of the bottle so as to have the orifices covered with liquid as soon as possible, thereby preventing the foaming of the milk in the bottle.

That is a common expedient used particularly in beverage filling machines.

Q. What is the function of the cup 10 at the middle
1794 portion of the dispensing valve as shown in Figure 1?

A. The cup 10 is a measuring device.

In the operation of the machine, when the valve is closed and retracted, as illustrated in Figure 1 of the drawings, the measuring cup is submerged under the level of the liquid in the reservoir 1.

As the measuring cup is raised, the liquid begins to be discharged from the measuring cup 10, through the ports 21, into the hollow valve stem element 11 and thence flows into the bottle, and the bottles aren't numbered—the bottle being filled.

The amount of liquid filled at any one time is, of course, determined by the capacity of the measuring cup 10.

In Figures 3 and 4, the manner of the port is illustrated, the arrangement for varying the capacity of those cups by inserting displacement element 25.

Q. Those elements take up the portion of the space within the cup?

A. That is right, the elements 25 are intended to take up the portion of the space of the cups 10, thereby
1795 limiting the capacity to hold, for the cup to hold fluid.

By using the right size displacement element, you can accurately determine the amount of liquid which the cup 10 will hold.

1796 Q. Assuming that those bottles shown there are quart bottles, then what would you do if you were going to fill pints?

A. If you want to fill pint bottles, you would put a weight or a displacement element 25 having cubical capacity equivalent to that of a pint of milk, measured so that the remainder of the cup 10 would hold one pint.

Q. How is the bottle raised to the valve?

A. The bottle, during the filling operation, is raised by the use of the pneumatic lifter, generally identified by the numerals 35 and 34, which, in turn, is controlled by the control valve 38.

I said pneumatic. It may be hydraulic. That is a plunger type lifter for lifting the table 32 on which the bottles are positioned and, as you will see in the illustration, while one bottle is being filled under the filling valve 16, the other bottle is being capped under the capper 45.

Q. Is the time of flow controlled in this form of dispensing mechanism?

A. The time of flow could be controlled, if you like, by lowering the bottle away from the valve. I think in the glass type of bottle, the bottles are usually filled to
1797 the cap seat and it isn't essential in such instances to control the time of flow, but if desired, you could lower the bottle away from the valve at any stage in the filling operation.

Q. Generally speaking, however, when you have a measuring type of filler, that is, one which dispenses a measured amount in terms of volume, to a cup, such as the cup 10, is there any need for a time control on the flow?

A. There is no need. You leave the bottle there until the measuring cup is empty.

Q. Was this patent, the LaPorte patent, cited by the Patent Office during the prosecution of the patent in suit?

A. The LaPorte patent was not cited by the Patent Office in the prosecution of the patent in suit.

Q. Will you please turn to the second patent in the book, Mr. Deletzke, the Beyer patent 668,303 and tell us, please, what type of device is disclosed in that patent?

A. The Beyer patent is a combined gravity vacuum type of milk bottle filling machine.

1798 The reservoir A is supplied with milk through the supply pipe immediately below—put it this way—to the righthand side of the reservoir A as viewed in Figure 1 of the drawings of that patent.

Q. That is reservoir A?

A. A. And the flow of the milk into the reservoir is controlled by the float valve a. This is a body letter "a".

Q. What type of dispensing valve is this?

A. The dispensing valve is the conventional spring loaded telescope sleeve type of milk bottle dispensing valve.

In its operation, it is very similar—not only in its operation, but in its operation as well as in its structure, it is very similar to the Lippold spring loaded telescope sleeve milk bottle filling valve which we discussed a few minutes ago.

Actually, in the operation of the Beyer filler, the valve, when it is first opened by the engagement of the mouth of the bottle against the base of the valve, causes the sleeves to start to telescope.

1799 As the sleeves start to telescope, the vent valve is first opened. That is shown more clearly in Figure 2 of the Beyer patent and is the central valve identified by the numeral C—C8.

As soon as the vent valve is opened, the vacuum or reduced pressure condition existing in the upper portion of the milk reservoir A, draws part of the air out of the bottle G. As the bottle continues to rise and while the air is thus being drawn out of the bottle, the liquid valve is opened.

Now, the liquid valve element is identified by the numeral C3 and as the reduced air pressure or vacuum condition in the upper portion of the reservoir A continues to draw air out of the botle G, the fluid starts to rush into the bottle through the elements C and the valve seat which is formed in the lower portion of the outer telescope tube element, identified by the numeral—I can't find the numeral—just the outer telescoped tube of the valve assembly.

Q. Is that "d"?

A. Yes. That is a small d. That is shown in Figure 3.

1800 So, in the Beyer valve you have an arrangement both for controlling the flow of air into the machine, which is essential so as to prevent the necessity of having a large vacuum producing machine.

In other words, you want to shut off the air which can flow through the filling valves into the filling machine to reduce the necessary capacity of the vacuum machine.

When the bottle has finally been filled and the pressure is

released on the level 1, thereby lowering the pedestal 8, the bottle G begins to lower and in that lowering process, first the liquid valve is closed and the closing of the valve is accomplished by the comprehensive action of the spring e.

After the liquid valve is closed, then the vent valve for the air is next closed. By that time, by the time the bottle G is filled, milk or fluid will usually have raised a short distance into the vent stem, which is identified by the numeral C, through which the stem C7 of the vent valve passes.

1801 The next bottle that is placed under the vacuum machine, under the filling machine—and when the valve is opened, the in-rushing air will throw this small slug of milk back into the vent and the filling reservoir and permit the escape of air.

Q. Is there a constant hydrostatic head maintained in the Beyer device?

A. Obviously, if you use a float valve, you maintain a constant level. You can't have anything else but a constant hydrostatic head.

Q. Is the lever 1 that you referred to a foot-operated lever?

A. Well, as illustrated here, it is a foot-operated lever. There are machines made very similar to this which have a hand-operated lever. It doesn't make much difference how you operate the lever. It is linkage to operate the bottle against the valve.

Q. Would this fall within the general classification of a hand filler, so far as the trade is concerned?

A. This would fall within the general classification as a hand filler not because it is actuated by hand or foot but that is the designation given to small

1802 capacity machines.

Q. That really means a manually operated machine?

A. A manually operated machine, as distinguished from a power operated machine. Now, I should say that most machines of this general type today also are equipped with a capping device.

Q. Will you raise your voice, please?

A. Most machines of this general type today are also equipped with a small capping device so that the bottles can be immediately capped after they are filled and usually

either the filling valve or the capper is actuated by hand or by foot or by both.

Q. Will you please turn to the—excuse me.

Was this patent cited by the Patent Office during the prosecution of this patent in suit?

A. No, the Beyer patent was not cited by the Patent Office during the prosecution of the patent in suit.

Q. Would you please turn to the Winton patent, No. 2,030,951?

By Mr. Clement: I believe it is the last tab in the first tier of tabs, your Honor.

By the Court: Two million—

By Mr. Clement: 2,030,951, Winton.

By Mr. Clement:

1803 Q. What type of mechanism is disclosed in this Winton patent?

A. Well, the Winton patent, 2,030,951, discloses a measuring type gravity flow milk bottle filling machine, particularly designed for filling Seal Cone type of paper milk bottles.

Q. Is there a representation in Figure 1—

A. In Figure 1 of the drawing of the patent, there is a dotted-in representation of the overall general appearance of the Seal Cone type of paper bottle identified by the numeral R.

Q. Does this device have a float valve?

A. That device has a float valve. It is also equipped with measuring cups for measuring the amount of liquid discharged.

Q. What are the numbers of those elements?

A. The float valve is identified by the numeral 10, the float being identified by the numeral 12. The purpose of the float obviously is to maintain a given level of liquid in the reservoir.

Q. What is the reference number of the dispensing cup?

A. I was trying to give the number of the reservoir. I can't find it. It is 8.

1804 The numbering cups are identified by the numeral —the measuring cups are identified by the numerals 35 and I believe are more clearly illustrated in Figure 3 of the drawing on the next page of the patent.

In the Winton patent, as in one of the previous patents we have discussed, there is variation or control of the amount of liquid held in the cup 35 which may be accomplished by the provision of displacement elements 50.

Do you want me to describe the operation of the machine?

Q. Well, just very briefly. Those displacement elements are hanging from a rod, are they?

A. Well, they are hanging from a rod, yes, from a rod.

Q. In Figure 1, I think they are.

A. Rod 51, which extends through the machine. I believe one of the important things to note about the Winton machine is that it has obviously an orifice type of valve, dispensing valve, as clearly shown in Figure 4.

Q. I think Figures 6 and 7 show it perhaps most clearly.

1805 A. And Figures 6 and 7. And, the patent discloses and illustrates an arrangement for opening and closing the dispensing valve in timed sequence. In other words, the valve is opened, mechanically held open, mechanically for a given period of time and closed at the end of that given period of time by the use of a cam and cam follower arrangement which, in turn, operates the linkage which actuates the valve.

In this Winton patent, the valve is seated—the valve element 31 as illustrated in Figure 6 of the drawings is seated against the valve orifice 48 by gravity. It is removed by lifting on the valve stem 33 to open the valve. It seats itself, due to its own weight.

1806 Q. How is that lifting accomplished?

A. The lifting is accomplished—if you will refer to the Figure 2 of the drawings, there, you will observe the power shaft identified by the letter S and the cam arrangement and cam follower arrangement.

Q. What is the cam number?

A. The cam is identified by numeral 37.

Q. And the cam follower, 38, is that it?

A I think the cam follower is 38.

As the cam is rotated by linkage 40, the rod extending upwardly from that cam assembly up to the reservoir 8 is moved up and down, depending upon the particular configuration of the cam 37.

The linkage 40, in turn, causes a pivoting of the lever 45. The inner end of the lever 45 is connected to the upper portion of the measuring cup and the lower portion of the measuring cup is connected to the valve stem 33. As the linkage—as the lever 45 moves upwardly, the measuring cup 35 is moved upwardly through the bottom—through

the body of fluid 11 into the reservoir 8, filling the cup, 33-35.

When the cup has reached a certain point in
1807 its upward travel, the flange 34 on the valve stem
33 engages the bottom of the cup, thereby lifting the valve element 31 from the valve seat 48, permitting the liquid to drain from the measuring cup 35.

After a predetermined period of time, when the cam has rotated through a given cycle, the motion of the linkage and leverage is reversed. The measuring cup is permitted to move downwardly and the valve, as the measuring cup releases its lifting tension on the valve stem 33, the valve stem 33 and the valve element 31 descend, with the result that the valve element 31 seats against the orifice 48, thereby sealing the valve.

By Mr. Clement: I will ask the Reporter to mark a chart, illustrating Figures 3 and 4 of the patent in suit, as Defendants' Exhibit 47 for identification.

(Thereupon said chart was marked DEFENDANTS' EXHIBIT NO. 47 for identification.)

By Mr. Clement:

Q. Mr. Deletzke, how does the valve—

1808 By the Court: I am going to ask you to recess at this time.

By the Marshal: This Honorable Court now stands at recess until 2:00 o'clock this afternoon.

(Thereupon at 12:10 o'clock p.m., Friday, June 3, 1955, a recess was taken until 2:00 o'clock p.m. of the same day.)

VOL.

II

No. 962

LIBRARY
SUPREME COURT, U.S.

Appeal from the United States District Court for the Southern District of Illinois, Eastern Division.

TRANSCRIPT OF RECORD FILED JUNE 16, 1936.
PRINTED RECORD.

In the

United States Court of Appeals

For the Seventh Circuit

Nos. 11784 - 85 - 86

THE MOJONNIER DAWSON COMPANY,
Plaintiff-Appellant,

No. 11784 *vs.*

U. S. DAIRIES SALES CORPORATION, et al.,
Defendants-Appellees,

THE MOJONNIER DAWSON COMPANY,
Plaintiff-Appellee,

No. 11785 *vs.*

U. S. DAIRIES SALES CORPORATION, et al.,
Defendants-Appellants,

The MOJONNIER DAWSON COMPANY,
Plaintiff-Appellee,

No. 11786 *vs.*

U. S. FILLER EQUIPMENT, INC., et al.,
Defendants-Appellants.

Appeals from the United States District Court for the Northern District of Illinois, Eastern Division.

INDEX.

Placita 1
Statement under Rule 10(b) 2
Complaint, filed Feb. 19, 1954 5
Answer and Counter-Claim, filed Apr. 1, 1954..... 10
Counter-Claim 16
Second Amended Complaint, filed Sept. 27, 1954..... 20
Answer to Second Amended Complaint, filed Oct. 18, 1954 29
Counter-Claim 38
Answer to Counter-Claim, filed Nov. 8, 1954..... 45
Answer to Second Amended Complaint, filed Dec. 10, 1954 47
Notice re Letters Patent, filed Feb. 25, 1955..... 56
Notice re Letters Patent, filed Feb. 28, 1955..... 58
Order re Counts I and III, entered Mar. 25, 1955.... 59
Stipulation re trial, filed Apr. 11, 1955 59
Notice re Letters Patent, filed Apr. 11, 1955..... 61
Notice re prior art patents, filed Apr. 11, 1955..... 63
Notice re prior art patents, filed Apr. 20, 1955..... 64
Notice re prior art patents, filed Apr. 28, 1955..... 66
Motion to Amend Second Amended Complaint, filed May 17, 1955 67

TRANSCRIPT OF PROCEEDINGS.

Colloquy 117

Witnesses for Plaintiff.

Testimony of:
Allen, Carl F. (Deposition of)..... 630
Brasile, Maurice J.....433, 1146
Brooks, Frank G. (Deposition of)..... 584
Campbell, Lee 360

Farrell, Richard L. 343
Fishleigh, Clarence T. 121, 1026
Hoyt, Grant V. 381
Lewis, Albert A. 515
Mojonnier, Albert B. 68, 249, 1149
Peterson, Paul S. 355
Richardson, Jack B. 385
Rosen, Joseph 367
Wainess, Harold 376

WITNESSES FOR DEFENDANTS.

Testimony of:
Botts, Joseph M. 917
Brasile, Maurice J. 984, 1162
Dawson, Lynn Scott 683
Deletzke, Norman E. H. 672, 725
Dempsey, Luther 690, 711
Geiss, Albert E. 611
Hahn, Richard 906
Melikian, Khoren C. (Deposition of) 693
Mojonnier, Albert B. 860, 952
Moravec, Robert M. 910
Richardson, Jack B. 925
Rosboro, Otis Augustus 719, 739
Shaw, John L. 1019
Voland, Richard E. 1013
Willette, Edward 933, 1140

Order re trial, entered June 2, 1955 1164

Findings of Fact, filed June 6, 1955 1165
Conclusions of Law 1167

Memorandum, filed Nov. 15, 1955 1168

Findings of Fact, filed Feb. 21, 1956 1171
Conclusions of Law 1177

Judgment, entered Feb. 21, 1956 1178
Notice of Appeal by Mojonnier, filed Mar. 22, 1956... 1179
Notice of Appeal by U. S. Dairies, filed Mar. 22, 1956.. 1182
Notice of Appeal by U. S. Filler Equipment, Inc., filed Mar. 22, 1956..... 1184
Statement of Points of U. S. Filler Equipment, Inc... 1186
Plaintiff's Statement of Points..... 1187
Statement of Points of Brasile Group..... 1192
Notice re Bill of Costs..... 1194
Bill of Costs 1195
Statement of Clerk re Taxation of Costs..... 1199
Petition for Taxation of Costs..... 1200
Bill of Costs 1201
Statement of Clerk re Taxation of Costs..... 1204
Orders re Costs 1205
Complaint—No. 55-C-137, filed Jan 25, 1955..... 1207
Order consolidating causes, entered Feb. 28, 1955.... 1212
Order dismissing Count II—No. 55-C-137, entered Mar. 1, 1955..... 1212
Answer—No. 55-C-137, filed Mar. 10, 1955..... 1213
Plaintiff's Exhibit 13-A-B—Letter Aug. 19, 1954, Zinn to Mojonnier 1221
Answer to Counterclaim; filed Apr. 14, 1955..... 1223

UNITED STATES LETTERS PATENT.

No. 2,667,990—A. B. Mojonnier—Feb. 2, 1954..... 1226
No. Re 23830—A. B. Mojonnier—May 18, 1954..... 1240
Clerk's Certificate 1255

Descriptive List of Plaintiff's Exhibits.

Exhibit Numbers	
1	Certificate of Incorporation, The Mojonnier Dawson Company, March 13, 1946.
2	Copy Mojonnier patent 2,667,990 February 24, 1954.
3	Original Mojonnier Reissue patent No. 23,830, May 18, 1954.
4	Certified copy assignment Mojonnier invention to The Mojonnier-Dawson Co. executed March 28, 1949.
5	Copy Mojonnier patent 1,956,077 April 24, 1934, Liquid Level Control Mechanism.
6	Copy Fagan & Mojonnier patent 1,956,889 July 17, 1934.
7	Copy Fagan & Mojonnier patent 1,992,693 Bottle Capper.
8	Booklet compiled by A. B. Mojonnier regarding his work with Mojonnier Brothers Company.
9	Copy Mojonnier patent 2,149,619 March 7, 1939, Float Control Electric Switch.
10	Copy Fagan & Mojonnier patent 2,138,271 November 29, 1938, Bottle Capping Machine.
11	Fagan & Mojonnier patent 2,147,366 February 14, 1939, Bottle Filling Machine.
12	Mojonnier & Miller patent 2,309,859 February 2, 1943, Art of Filling Vessels.
13	Photograph of Mojonnier Brothers vacuum type filling machine.
14A	Blueprint February 27, 1939, Sketch of Experimental Assembly for American Can Co. paper bottles, Mojonnier Brothers Co.
14B	Typewritten report on filling American Can paper bottles, referring to Sketch PX 14A.
15	Sales Circular "Mojonnier-Dawson Specialties".
16	September, 1946 issue "The Mojonnier Dawson Monthly Digest".

Exhibit Numbers	
17	Page 1 of letter July 11, 1946 from W. K. Cabot to The Mojonnier Dawson Company.
18	Page 2 of same letter.
19	Letter November 1, 1946, W. K. Cabot to The Mojonnier Dawson Co.
20	Letter January 7, 1947, W. K. Cabot to The Mojonnier Dawson Company.
21	Letter January 10, 1947, A. B. Mojonnier to W. K. Cabot.
22	Letter January 14, 1947, W. K. Cabot to The Mojonnier Dawson Company.
23	Letter February 19, 1947, W. K. Cabot to The Mojonnier Dawson Company.
24	Letter March 7, 1947, W. K. Cabot to The Mojonnier Dawson Company.
25	Photostat "Preliminary Vacuum Syruper for Frozen Food Containers" with one-page description accompanying letter PX 24.
26	Letter A. B. Mojonnier to W. K. Cabot.
27	Original sketch from which print was made, sent with letter PX 26.
28	Original sheet of data from which print was made, sent with letter PX 26.
29	Print of sketch sent with letter PX 26.
30	Letter May 9, 1947, A. B. Mojonnier to W. K. Cabot.
31	Original sketch by A. B. Mojonnier of tank, valve and solenoid.
32	Original sketch by A. B. Mojonnier of nozzle for first laboratory model, and miscellaneous sketches
33	Production order for nozzle, job #20 Syruper.
34	Original sketch by A. B. Mojonnier Mathematical calculations regarding tank and float.
35	Original sketches (12 sheets) by A. B. Mojonnier, special filler for Bowman Dairy Co.

Exhibit Numbers	
36	Photograph of filler for Bowman Dairy Co.
37	Plaintiff's Model WC1 Filler (physically).
38	Original list of materials and estimate of labor test report on Bowman Filler, April 12, 16, 17 and 18, 1948.
39	Plaintiff's Model CP Filler (physical).
40	Accused Filling Machine (physical).
41A to 41D, respectively.	Fishleigh charts on Mojonnier Reissue patent 23,830.
42	Fishleigh chart of reissue claim 1.
43	Fishleigh chart of reissue claim 6.
44	Fishleigh chart of reissue claim 7.
45A to 45C, respectively.	Fishleigh charts of plaintiff's commercial filling machine, Model CP.
46, 47, and 48	Fishleigh charts showing mechanical elements of reissue claims 1, 6 and 7 applied to plaintiff's commercial filling machine.
49A and 49B	Fishleigh charts of Accused Filling Machine, Model MJ semi-automatic (PX 40) showing, respectively, valve closed and valve open.
49C	Fishleigh chart of accused filling machine, from drawing PX 81.
49D	Fishleigh chart, showing photograph of accused filling machine, Model MJ semi-automatic.
49E	Fishleigh chart, enlargement of valve lever on accused filling machine.
50, 51 and 52	Fishleigh charts showing wherein the mechanical elements of reissue claims 1, 6 and 7 are found in the accused filling machine, Model MJ semi-automatic.
53	Pure Pak paper carton, ½ gallon (physical).
54	American Can paper carton, 1 quart (physical).
55	Seal King paper carton, 1 quart (physical).
56	Colgate "Barber Shave" bomb (physical).

Exhibit Numbers	
57	Bridgeport Brass "Goodaire" bomb (physical).
58	Stipulation re authenticity of document, agreement December 29, 1951 between Mojonnier Dawson Company as the "Seller" and John A. Polivka and Maurice J. Brasile as "Purchasers".
59	Circular by Preformed Carton Corporation showing Mojonnier filler under agreement PX 58.
60	Stipulation re authenticity of document, agreement September 29, 1952 between U. S. Filler Equipment, Inc. and Preformed Carton Corp.
61	Letter July 7, 1953, The Mojonnier Dawson Company to Preformed Carton Corporation, U. S. Filler Equipment, Inc., and U. S. Carton Forming Corporation, terminating agreement of December 29, 1951 (PX 58).
62	Circular of Mojonnier-Dawson Electromatic Fillers.
63	Circular of Electromatic Model E-Sealking Filler, by The Mojonnier Dawson Co.
64	Dupont book on aerosols, showing Mojonnier-Dawson filling machine, pages 14-15.
65	Photograph of model aerosol filler for Williams Foam Shave.
66	Photograph of model aerosol filler, Mojonnier model IM 30.
68	Large scrapbook containing articles, publications and clippings on commercial success (physical).
69	Circular of M-D Electromatic filler, by Illinois Creamery Company.
70	Drawing entitled "Automatic Paper Bottle Filler-Sealer-Stapler, U. S. Filler Corp., Maurice Brasile, Eng. J. R. Richardson".
71	Photograph of machine, DX 33.
72 to 79, inclusive.	Richardson drawings.

Exhibit Numbers	
80	Report July 2, 1953 by J. B. Richardson, U. S. Filler Corporation and J. F. Earp, Ex-Cell-O Corporation entitled "Comment on U. S. Filler Corporation Semi-Automatic Filler".
81	Drawing by Richardson entitled "Milk Carton Filling Machine, Pure Pak Cartons ½ gls. qts. pt. ⅓rd qts.".
82	Report dated September 30, 1953 by J. F. Earp to C. Monroe, Pure-Pak Engineering, Ex-Cell-O Corporation, on tests of U. S. Carton Forming electrically timed filler.
83	Letter October 15, 1953, Jack B. Richardson to Ex-Cell-O Corporation, on stationery of Milk Container Equipment Corp.
84	Letter October 26, 1953, by E. R. Andre, Pure Pak Division, Ex-Cell-O Corporation to J. Richardson, U. S. Carton Forming Corp.
85	Photograph of artist conception of Brasile filling machine.
86	Photograph of Mojonnier-Dawson filling machine at Oakside Dairy.
87	Illinois Secretary of State Certificate "Articles of Incorporation including Warrant to the Sheriff and Certification of the Attorney General of Preformed Carton Corporation"; incorporated January 23, 1952.
88	Illinois Secretary of State Certificate "Articles of Incorporation of U. S. Filler Equipment, Inc.", incorporated September 22, 1952.
89	Illinois Secretary of State Certificate "Articles of Incorporation and all Amendments thereto, including Warrant to the Sheriff and Certification to the Attorney General of the U. S. Carton Forming Corp.", incorporated November 8, 1952.

Exhibit Numbers	
90	Illinois Secretary of State Certificate "Articles of Incorporation of Purity Pack Corp.", incorporated September 2, 1953.
91	Illinois Secretary of State Certificate "Articles of Incorporation and Amendment thereto, of Milk Container Equipment Corp.", incorporated September 2, 1953.
92	Illinois Secretary of State Certificate "Articles of Incorporation and Amendment thereto of U. S. Dairies Sales Corp.", incorporated December 18, 1953.
93	Voting Trust Agreement dated June 23, 1953 between A. A. Lewis and Maurice J. Brasile as "Trustees" or "Voting Trustees" and U. S. Carton Forming Corp.
94	Voting Trust Agreement dated July 10, 1953 between A. A. Lewis as "Trustee" or "Voting Trustee" and Preformed Carton Corporation.
95	Voting Trust Agreement dated July 10, 1953 between A. A. Lewis as "Trustee" or "Voting Trustee" and Maurice J. Brasile, Pauline R. Brasile and Eugene Blum of U. S. Filler Equipment, Inc.
97	Letter October 26, 1953 from E. R. Andre, Pure-Pak Division, Ex-Cell-O Corporation to Maury Brasile, U. S. Carton Forming Corp.
98	Agreement dated October 1, 1952 between Brooks Supply Co. and U. S. Filler Equipment, Inc.
99	Circular "Pure-Pak Carton" filler showing "Electromatic" filler, by Brooks Supply Company, Inc.
100	Purchase Order No. X-690 dated June 26, 1953 by Broadview Dairy, Topeka, Kansas, to U. S. Filler Co., Woodstock, Illinois, for "1—Automatic Excello Pure-Pak carton filler".

Exhibit Numbers	
101	Letter dated July 1, 1953 from U. S. Carton Forming Corp. to Brooks Supply Company with reference to "Order No. X-690" for one automatic Ex-Cell-O Pure-Pak carton filler.
102	Letter dated July 6, 1953 from Brooks Supply Co. to U. S. Carton Forming Corp. with reference to order X-690.
103	Brochure of automatic filler by Paper Pack Corporation.
104	Brochure of semi-automatic filler by Purity Pack Corp.
105	Assignment of Invention dated June 30, 1953 by Maurice J. Brasile to Pack Equipment Corporation.
106	Illinois Secretary of State Certificate "Articles of Incorporation of Pack Equipment Corp.", incorporated June 26, 1953.
108	Brochure by U. S. Carton Forming Corporation entitled "Milk Packaging History in the making for the Smaller Dealer".
109	Filling Machine Lease by Pack Equipment Corporation.
111	Receipt dated June 10, 1953 given to Brooks Supply Co. by Ace Motel.
112	Photograph similar to PX 85.
113	Photograph similar to PX 71, marked as Plaintiff's Exhibit G in Brooks deposition.
114	Photograph of "Seal King" machine for filling "Sealright" cartons.
115	Photostat enlargement of sheet 1 of drawings, Melikian patent 2,682,984.
116	Photostatic enlargement of sheet 1 of Zsoldos patent 1,639,679.
116B	Photostat enlargement of Fig. 3 of Zsoldos patent.
116C, 116D and 116E	Photostatic enlargements of modifications of sheet 3 of Zsoldos patent.

Exhibit Numbers

117A and 117B Photostat charts of sheet 1 and sheet 3, respectively, of Engels patent 2,542,239.

118 to 122, inclusive. Fishleigh Demonstration models (physical).

123 Photostat chart of sheet 2, Ashkenaz patent 2,254,833.

124 Photostat chart of sheet 1, Zsoldos patent 1,639,679.

125 Fishleigh chart showing series fillers.

126 Fishleigh chart showing "Classification of Prior Art Patents".

127, 128 and 129 Fishleigh charts showing wherein mechanical elements of reissue claims 1, 6 and 7, respectively, are not found in prior art structures.

130 Letter dated March 10, 1953 from U. S. Carton Forming Corp. to Ralph R. Miller & Sons.

131 Letter dated March 10, 1953 from U. S. Carton Forming Corp. to Brooks Supply Co.

132A to F Credit memos for defective cartons, given by U. S. Carton Forming Corp.

133 Letter dated May 27, 1952 from John D. Faulkner, Chief, Milk & Food Branch, Division of Sanitation, Federal Security Agency to Mojonnier Dawson Co.

134 Letter dated April 30, 1953 from L. C. Pecham, Sr., Sanitarian, Regional Milk and Food Consultant, Department of Health, Education, and Welfare to Mojonnier-Dawson Company.

135 Sheet page 1-a, 1948, from Mojonnier Dawson Material Summary Book.

136 Sheet from Mojonnier Dawson Sales Ledger regarding Bowman Dairy Company.

137 Mojonnier Dawson Sales Journal from June 4, 1947 to April 30, 1948 (physical).

138 Sheet from Mojonnier Dawson Cash Book for May, 1948; and

139 Schematic layout by A. B. Mojonnier showing use of pump and balance tank.

Descriptive List of Exhibits of Brasile Group Defendants.

Exhibit Numbers	
1	Rudd-Melikian packing and shipping ticket No. 1027, 6/9/47.
2	Rudd-Melikian invoice No. 1030, 6/9/47.
3	Rudd-Melikian coffee dispenser, Model C-1, Serial No. C-10 (physical).
4	Melikian patent No. 2,682,984.
6	Compilation of prior art patents relied on by defendants.
7	File history of original patent No. 2,667,990.
8	File history of reissue patent No. 23,830.
9	Large Chart 3, Zsoldos patent drawings.
10	Dispensing valve & arm from present U. S. Dairies filler (physical).
11	Large Chart 5, modified Zsoldos drawing with Fagan float.
12	Letter, Zinn to Mojonnier, Aug. 28, 1947.
13	Letter, Zinn to Mojonnier, Oct. 20, 1947.
14	Letter, Zinn to Mojonnier, Nov. 4, 1947.
15	Letter, Zinn to Mojonnier, Jan. 9, 1948.
15A	Fireside Marshmallow print S-601.
15B	Fireside Marshmallow print S-602.
16	Letter, Dorwaldt (Golden State) to Mojonnier, Nov. 3, 1947.
17	Letter, Dorwaldt to Mojonnier, Dec. 3, 1947.
18	Letter, Mojonnier to Dorwaldt, Dec. 16, 1947.
19	Letter, Zinn to Mojonnier, Jan. 26, 1948.
20	Letter, Mojonnier Dawson to Zinn, Jan. 27, 1948.
21-22	Pages from Mojonnier Dawson purchases control ledger account for 1948.
26-26	Letter, Mojonnier to Larsen (Page Milk Co.), Feb. 9, 1948.

Exhibit Numbers

27 Compilation of patents appearing on notice on Mojonnier Dawson filler.

28-29 Circular issued by Illinois Creamery Supply Co. re Mojonnier Dawson filler for Zinpak cartons.

30 Mojonnier Dawson infringement notice to trade, Feb. 20, 1954 (mimeo.).

31 Mojonnier Dawson infringement notice to trade, Feb. 20, 1954 (printed).

32 Typed comparison of Claim 6 of reissue application with Claim 1.

33 Brasile experimental machine (physical).

34 Letter, Aug. 31, 1953, rescinding assignment of invention.

35 Letter, Jan. 8, 1954, rescinding Preformed voting trust.

36 Letter, Jan. 8, 1954, rescinding U. S. Filler voting trust.

37 Letter, Jan. 8, 1954, rescinding U. S. Carton voting trust.

38 Resignation of Maurice J. Brasile as director of U. S. Carton, Dec. 24, 1953.

39 Resignation of Eugene Blum as director of U. S. Carton, Dec. 23, 1953.

42 Letter, Geiss (Bowman) to Mojonnier, March 9, 1948.

44 Vapor Heating Memorandum, Rosboro to Bruce, July 14, 1950.

45 Large Chart 4, Warren patent drawings.

46 Large Chart 2, drawing of accused machine.

47 Large Chart 1, Mojonnier Dawson patent drawings.

48 Sketch, inoperative Mojonnier-type filler No. 1.

49 Sketch, inoperative Mojonnier-type filler No. 2.

50 Letter, Maurice J. Brasile to Mojonnier Dawson, Feb. 11, 1954.

Exhibit Numbers	
53	Mojonnier Dawson statement of account to Preformed, June 1, 1953.
55	Richardson Sketch, pusher hinge & spring, 3/8/53.
56	Richardson Sketch, stapler, cam., etc., 3/3/53.
57	Richardson Sketch, pressure plate assembly, 3/1/53.
58	Richardson Sketch, stapler block, 3/1/53.
59	Portion of float valve (physical).
60	Downspout of float valve (physical).
61	Sketch, inlet valve spout (4/2/53).
62	Letter, Mojonnier to Zinn, Aug. 28, 1946.
63	Letter, Mojonnier to Zinn, Jan. 22, 1948.
64	Sketch, "Electronic Filler", 10/14/47.
65	(A-B-C) Pages from Mojonnier Dawson sales ledger account for 1948.
66	Letter, Mojonnier to Geiss (Bowman), Mar. 15, 1948.
67	Letter, Larsen (Page Milk Co.) to Mojonnier, Feb. 4, 1946.
68	Easy-Lift Pure-Pak carton (physical).
69	Ex-Cell-O Corp. filling machine lease (printed).
70	Supplemental agreement re preforming.
71	Closing plate for use with M-D Model CP Filler (physical).
72	Letter, Brasile to Werber, Feb. 11, 1954.
73	Letter, Brasile to Brooks Supply Co., Feb. 12, 1954.
74	Milk Container statement of profit and loss, actual and projected.
75	Purity Pack & U. S. Dairies statement of profit and loss, actual and projected.
76	Consolidated projected statement of profit and loss.
77	Modified Zsoldos patent drawing No. 2.
78	Modified Zsoldos patent drawing No. 3.
79	Modified Zsoldos patent drawing No. 4.
80	Brasile license to Milk Container, Sept. 7, 1953.

1809 Chicago, Illinois,
Friday, June 3, 1955,
2:00 o'clock p. m.

Court convened pursuant to recess.

Present:

Mr. McCanna.
Mr. McKnight.
Mr. Pillote.
Mr. Allen.
Mr. Clement.
Mr. Voland.
Mr. Houghteling.
And other Counsel.

1810 And thereupon the following further proceedings were had herein:—

By the Clerk: Case on trial.
By the Court: Proceed.

NORMAN E. H. DELETZKE, called as a witness on behalf of the Defendants, having been previously duly sworn and examined, resumed the stand and testified further as follows:

Direct Examination (Ctd.) by Mr. Clement.

Q. Mr. Deletzke, we were referring to the Winton patent, 2,030,951, at the close of this morning's session. That is at the bottom of the first tier of tabs.

Will you give your attention, Mr. Deletzke, to Defendants' Exhibit 47, this chart that we have before you, and I will ask you what relationship does the dispensing valve shown in Winton have with relation to the dispensing valve shown in Figure 3 of the patent in suit.

A. The dispensing valve shown in Figure 3 of the patent in suit and the dispensing valve shown in Figures 6 and 7 of the Winton patent are in sub-
1811 stance identical.

They are both gravity actuated or gravity closed valves. Both have an orifice. Both have a rounded valve element at the bottom of the valve stem, and in each instance

the weight of the valve stem and the valve element seat the valve element to seal the orifice.

Q. Would you please turn now, Mr. Deletzke, to the Fagan and Mojonnier patent, No. 2,147,366. It is the first tab in the second tier, I believe, your Honor.

By the Court: I have it now.

By Mr. Clement:

Q. Would you tell us what type of machine this is, Mr. Deletzke?

A. The Fagan-Mojonnier patent 2,147,366 is what is known as a vacuum type milk bottle filling machine of the automatic or power driven type.

It is a relatively high capacity machine, since it is equipped, as I recall, with fourteen pedestals as illustrated in Figure 6 of the drawings.

Q. Does this patent have a float valve?

1812 A. The patent illustrates two float valves, one in the upper supply or surge tank J and one in the dispensing tank, identified by the letter E, the latter tank being positioned below, that is tank E being positioned below the tank J.

Q. What is the purpose of those two float valves?

A. Well, obviously the purpose of the float valve, which I shall refer to as number 266, in the upper tank J is to regulate the admission or control the admission of the fluid into the supply tank J and control the level of the fluid in that tank, while the lower float valve, which is identified by the letter F is to control the flow of liquid from the supply tank J into the dispensing tank E and to accurately maintain a predetermined level of fluid in the tank E.

1813 Q. How does that float valve F in the lower compartment compare with the float valve 24 shown in Figure 3 of the reissued Mojonnier patent, as far as the structure is concerned?

A structurally it is substantially the same, there being a difference in the configuration or the form of the float.

In the chart on the easel, Defendants' Exhibit No. 47, the float is of a spherical shape, while the float valve F of the Fagan et al. patent is of a slightly different configuration, more like the shape of a truncated cone.

But in both instances the float element has depending from its lower surface a strap-like arrangement, identified in the Fagan et al. patent by the numeral 190, with which

there is associated a valve element identified by the numeral 193 in the Fagan et al. patent, the valve element being adapted to be raised upwardly against the end of the supply pipe to seal the end thereof, and thereby control the flow of fluid through the valve F.

In substance, the identical parts are shown in the identical functional arrangement in Defendants' Exhibit 47.

1814 Q. I believe you heard Mr. Fishleigh's testimony, did you, the expert for the plaintiff?

A. Yes, I did.

Q. Could you tell me whether or not this float valve marked F in the lower chamber has a function closely comparable to the float valve 24 in Figure 3 of the patent in suit?

A. Yes, it does have a comparable function. The float valve in Defendants' Exhibit 47 obviously has the purpose of controlling the admission of fluid into the dispensing reservoir and to accurately control the level of the fluid maintained in that reservoir.

The float valve F in the Fagan et al. patent has precisely the same function with respect to the fluid admitted into the reservoir E.

In the Fagan et al. patent it is essential to maintain the predetermined level of the liquid in the reservoir E so that each of the bottles being filled through any one of the vacuum tubes 179—I think they are—anyhow, the upwardly and outwardly inclined vacuum tubes which communicate with the bottom of the reservoir E and the filling head H.

1815 Q. Are they shown in Figure 16?

A. I was looking at Figure 2. They are shown there in Figure 2. I don't know whether they are shown in Figure 16. Well, the filling head is shown in Figure 16 and the incline Figure 2—number 178. That is right. That is another one.

Well, to revert a bit, the purpose of the float valve F is to maintain an accurate predetermined level of fluid in the reservoir E so that as the vacuum is applied to the interior of the bottle M during the filling operation, the bottles M will be filled with the same speed during their rotation around the filling table.

In the event that the level of the liquid in the tank E should vary, it obviously would require a variation in the vacuum to cause the same speed of flow of liquid through

the pipe 78. If the level should drop, it would require more vacuum. If the level should rise, it requires less vacuum.

Obviously, the purpose of a rotary type of power-driven filler operation at a high speed is to have all of the bottles completely full at the time they reach the discharge
1816 station and you don't want to have them full before they reach there. That would be a waste of the capacity of the machine. You don't want them to be empty when they reach there because that would be a waste.

Q. Does this machine operate with a constant vacuum applied to it?

A. The machine operates with a predetermined, I will say, relatively constant vacuum insofar as that is possible when you have a continually opening series of valves.

Q. And if the vacuum is relatively constant, what would happen if the level of the liquid in the tank E varied to any great extent?

A. If the level in the tank E varied and the level were constant, the fluid would slow up.

Q. I beg your pardon. You mean the vacuum? I think you said "the level were constant."

A. Assuming that the vacuum is constant and that the fluid in the tank E drops, the flow of the fluid through the pipe 178 into the bottles M would be slower.

Q. Why?

A. For the simple reason it has to lift it through a higher distance.

1817 Q. Why is it important to keep the speed of the filling of the individual bottles relatively constant?

A. Well, in the machine of the type shown in Fagan, all models are supplied by a conveyor and they are taken away from the machine by a conveyor and as shown in the Figure 1 of the patent, the filled bottles are fed to a capper. All of the mechanism operates in a timed sequence and it is essential that every bottle be completely filled by the time it reaches the discharge station below the filling—its respective filling head and the time during which the bottles must be filled is the time which elapses from the entrance of the bottle under a filling head until the time it is removed therefrom.

If the machine is so set that the bottles are filled a long time before they reach the discharge station, it merely amounts to wasting the capacity of the machine. All of these machines are usually sold with a rated capacity. The machine has a rated capacity of—well, machines such

as this one would have a rate of capacity probably in
1818 the vicinity of 75 quarts per minute, since it is a 14 pedestal machine.

1819 Q. Mr. Deletzke, I will hand you a copy of Mojonnier patent 1,956,077 which has been introduced as Plaintiff's Exhibit 5 into this case and ask you what this particular patent covers.

A. When you say "covers" do you mean for me to look at the claims?

Q. Just what it discloses.

A. Roughly, the Figure 1 of the patent discloses a float valve arrangement.

By the Court: Will you suspend just a moment?

(Whereupon the Court gave his attention to another matter, after which the following further proceedings were had and taken herein:)

By the Court: Proceed, gentlemen.

By the Witness:

A. I was referring to Figure 1 and one of the features of the disclosure of Figure 1 of the Mojonnier patent 1,956,077 is a float valve of the plug type. In other words, it is a float valve which is not necessarily sensitive to the pressure of the fluid in the supply line.

By Mr. Clement:

Q. Excuse me, Mr. Deletzke: You are now refer-
1820 ring to a Mojonnier patent which was not in this book of cited patents by the defendants, are you not?

A. That is right. I am referring to patent—

Q. Which was introduced by the plaintiff as Plaintiff's Exhibit 5?

A. Plaintiff's Exhibit 5, that is correct.

By the Court: Did I have a copy of that?

By Mr. Clement: I have asked Mr. McCanna to produce the exhibit.

By Mr. Clement:

Q. Would you continue and tell us what that patent is concerned with?

A. That patent is concerned with a plug type of float valve, being so arranged structurally that it is not particularly sensitive to the pressure of the incoming fluid, as contrasted with the type of float valve as shown in Plaintiff's Exhibit 47 which is particularly sensitive to the pressure of the incoming fluid.

Q. Is this particular type of valve related to the Fagan and Mojonnier patents that we were just discussing a moment ago?

A. The float valve shown in Figure 1 of the Mojonnier patent No. 1,956,077, which is Plaintiff's Exhibit 5,
1821 is, in substance, the same float valve as is shown in Figure 2 of the Fagan-Mojonnier patent No. 2,147,366, which I was just discussing.

Q. Is there any mention in that patent directed only to the float valve, about the use of such a valve, what it would be used for?

A. Which patent—to which patent do you refer?

Q. Mojonnier patent No. 1,956,077.

A. Well, the title of the patent is:

"A Liquid Level Control Mechanism."

Q. Do you have in mind any portion of the specification which states what its use is? If not, we will proceed.

A. Well, in the second paragraph of the specifications it states:

"Invention has been worked out for and embodied in mechanism of class mentioned intended for the handling of milk and cream and maintaining proper levels thereof in bottle filling machinery."

And that is the use to which it was put in the Fagan-Mojonnier patent which I have just discussed.

1822 Q. Would the flow of milk backed into the lower tank E in the Fagan and Mojonnier structure be very substantial during the operation of the machine, as compared to the flow of milk into the tank E through the regular conduit 188?

A. Just a minute.

Q. I am referring now to the Fagan patent, No. 2,147,366.

By the Witness: Could you read that question, please?

(Whereupon the question was read as above recorded.)

By Mr. Clement:

Q. Do you recall, Mr. Deletzke, that there was some testimony that there was a flowback into the tank E from the bottles after they had been filled?

A. I am trying to find the conduit 188.

Q. It is the center conduit.

A. The relative flow would be very negligible. The patent merely points out that the backflow or the flowback into the lower tank E from the vacuum tank L is to be held at a minimum.

Actually, the liquid which flows back through the
1823 backflow mechanism, generally identified by the letter P, I believe, in Figure 2 of the Fagan et al. patent, is that amount of milk and foam escaped from the top of the bottle at the end of the filling operation. In other words, if the filler is so adjusted so as to complete the filling operation as soon as possible to the discharge station of the bottle, there will be very little milk flowing back into the vacuum tank L. Actually, the flowback is mostly foam.

Q. So that the function of the float valve into the tank, into the lower tank, and the operation of that float valve in the lower tank is relatively unaffected by that flowback, is that correct?

A. Well, it would be—I would say, it would be inconsequential. If you have a machine that is filling 75 quarts a minute, there is roughly 20 gallons per minute running through that float valve and I would say that the amount of milk that would be fed back through that vacuum machine, would not exceed a couple of quarts at the very most.

Q. Mr. Deletzke, have you examined the coffee vending machine, Defendants' Exhibit 3?

A. Yes, I have, in a general way.

1824 Q. Have you also studied the Melikian patent, 2,682,984 which is the last patent in this compilation of patents?

A. Yes, I have.

Q. Now referring both to this patent and to the physical exhibit, Defendants' Exhibit 3, can you tell me what type of filling is utilized in this structure?

A. Filling machine illustrated in the Melikian patent 2,682,984, utilizes the gravity principle of filling or dispensing in which the dispensing or filling is controlled by a timed solenoid actuated valve.

Q. Is there a float valve in this Melikian patent device or in the device Defendants' Exhibit 3?

A. A float valve? Not to my knowledge. Not that I recall.

Q. Is there a hydrostatic head in this device? I am referring particularly now to the cream dispensing portion which is labeled in Figure 1 of the Melikian patent 2,682,984 and the canister which is in place in Defendants' Exhibit 3 in the refrigeration compartment which
1825 was identified yesterday as a canister which normally has cream contained in it.

A. I think that is illustrated more clearly in Figure 12 in that same patent.

Q. Figure 12 of the Melikian patent?

A. Of the Melikian patent 2,682,984.

1826 Q. Yes.

A. Obviously you would have a hydrostatic head since you have a quantity of liquid in the canister, identified by the—well, it is not identified by numeral in that figure, but it is referred to as a cream canister in Figure 1 of Melikian. That canister, according to Defendants' Exhibit 3—is that right?

Q. Yes.

A. (Continuing.) —appears to be positioned, oh, I would say at least 18 inches above the dispensing valve. That is, the bottom of the canister is at least 18 inches—I may be mistaken on the exact amount, but that is what it looks like from here.

Q. What is he significance of the height of that head?

A. Well, the purpose of arranging that canister at that elevation above the dispensing valve is to insure a desired hydrostatic head on the dispensing valve. The larger the quantity of material contained in the canister will, of course, increase that hydrostatic head. The hydrostatic head would be a little higher when the canister is full than when the canister is empty, but in any event, the amount of liquid in that pipe would produce—

1827 Q. Are you referring to this plastic tube?

A. Yes, I meant the plastic tube.

Q. Which appears in Defendants' Exhibit 3.

A. Yes. That would produce a hydrostatic head on the valve in precisely the same manner as the surge tank in a hot water heating system in a home produces a hydrostatic head on the heating system.

Q. Is that tube the tube 43 in Figure 1 of the Melikian patent that we are discussing?

A. Yes. The tube to which I referred is identified by the numeral 43 in Figure 12 of the Melikian patent 2,682,984.

Q. Mr. Deletzke, would you briefly explain what the difference would be in having this canister immediately above this solenoid valve and having it relatively far above the solenoid valve in terms of what effect the change in the level of the fluid in the canister has on the dispensing operation?

A. Will you repeat the last part of your question? In terms of what?

Q. In terms of what effect a change in the level of liquid in the canister has on the dispensing operation.

Does it have less effect when the canister
1828 is raised up in this fashion, as shown in Defendants' Exhibit 3, than it would have if it were located close to the valve?

A. Obviously it would have less effect than when the canister is close to the valve. The amount of tubing you have between the canister and valve, with the exception of skin friction, would make very little difference. It is the actual vertical elevation between the surface of the liquid in the canister and the elevation of the orifice at which it is discharged that determines the speed with which the liquid will tend to flow through the orifice.

1829 Q. Mr. Deletzke, just to put this point completely at rest, let's assume that there are 30 inches between the dispensing valve and the level of the liquid in the canister.

A. Yes.

Q. Let's assume that the level of liquid in the canister drops three inches. Now how much of that 30 inches is that three inches in terms of fractional percentage?

A. And the canister is maintained in the same position?

Q. Yes. The level of the liquid drops three inches, and the entire distance from here to the initial level of the liquid was 30 inches.

A. I would say in that type of mechanism, with the—

Q. How much is that in terms of percentage?

A. Well, it is 10 per cent of the actual 30 inches, but that is—

Q. So that is a 10 per cent drop in hydrostatic head, is that right?

A. Yes, but it wouldn't make that much difference in the discharge because you have all sorts of other factors.

1830 Q. I am just asking you to compare that situation now with the situation where you have the canister here (indicating) and you have a canister of perhaps 10 inches height, and you drop the level.

A. Well, if you have the canister positioned almost immediately above the valve where you had an effective hydrostatic head of 6 inches, and you vary it 3, obviously you would be making a variation of 50 per cent.

If you have a 30-inch hydrostatic head and vary it 3, you are making a variation of 10 per cent.

Q. So with the same variation in terms of inches in the level of the liquid, in the case where you have the canister located at the high point, you get a relatively low actual variation in the hydrostatic head, is that correct?

A. Well, the greater or the larger the hydrostatic head, the less important become the variations in it.

Q. And the higher the level above—

A. Yes, the higher the level above the extension valve, the less important become the variations in the level

1831 of the tank. But those are not the important factors.

The important factors are the resistance supplied by the elements in the valve and the resistance supplied by the tubing. They are the important factors in orifice flow.

Q. Is the result you get, for example, in Exhibit 3, from raising the level of the canister comparable to the result you would get in having a float valve to keep a relatively constant head, if you had a low canister?

A. Well, if you have a canister arranged in the manner which we have just been discussing, the slight variations in the elevation of the liquid in the canister would be in substance the same as the variations you secure in the actual operations of a float valve.

In actual operation the float valve does not maintain a level on any exact predetermined line excepting when it comes completely to rest.

1832 Q. Well, we said a moment ago that if you raised the canister substantially above the valve, you would reduce the actual variation in the hydrostatic head to 10 per cent?

A. That is right.

Q. And if you had it immediately above, the valve, the canister immediately above the valve, with the same 3 inch change in level of liquid, you would have a 50 per cent change in head?

A. That is right.

Q. So the higher you go with the canister, the less percentage change you get in the head for a given 3 inch change, for example?

A. That is correct.

Q. So if the canister were raised 20 feet, you would get an extremely negligible change in the hydrostatic head?

A. You probably wouldn't be able to detect, if you raised that to an elevation of 20 feet, you wouldn't be able to detect whether it was full or empty when you started to drain liquid out of the orifice valve.

Q. And this arrangement shown in Exhibit 3 is a step in that same direction?

A. The obvious purpose of raising that canister to
1833 that elevation above the tank, and they have raised it to almost the maximum elevation in that housing, making allowance for the refrigeration equipment they have placed around it, was to produce a maximum static head outside of the canister by using a long length of tubing. That is the fluctuation of the level of the liquid in the canister, as I believe was demonstrated yesterday afternoon, is relatively negligible.

Q. I believe you recall we got a 10-ounce dispensing twice in a row from this machine, is that correct?

A. That is my recollection, yes.

Q. The second dispensing operation gave substantially the same amount as the first, even though the head had dropped 10 ounces?

A. That is correct.

Q. Does this Defendants' Exhibit 3 mechanism have, and I am quoting from Claim 1 of the patent,

"a valve mounted on the container for dispensing fluid from the container into a receptacle"?

A. Does the Melikian device have a valve mounted on the container?

1834 I wouldn't say the Melikian device has a valve mounted on the container. The valve is mounted on a framework down below the canister.

Q. It is in operating association?

A. It is in operating association obviously because the liquid flows through the tubing.

Q. Does it have a solenoid for operating the valve?

A. It has a solenoid operated valve. Incidentally, the valve happens to be adjustable so you can put more or less resistance to the flow through the valve.

Q. Where is that illustrated?

A. That is illustrated in Figure 8 of the drawings of the Melikian patent.

Q. Figure 8?

A. Figure 8 of that patent.

Q. How do you vary that? Is that a variation that is possible in the orifice?

A. That in effect controls the flow through the orifice. That is the valve, the needle valve 100—I think, at least that would apply to part of it—and by turning the needle valve in you restrict the flow through the valve, and by

turning the needle valve out you lessen the restriction of flow through the valve.

1835 Q. What would be the purpose of having such an adjustment in a machine of this character, with respect to the cream dispensing unit, for example?

A. Well, if you want to dispense quantities in very accurate amounts, you achieve that accuracy by selecting the right size of valve, and that you can achieve here by using an adjustable valve.

Q. Does the viscosity of cream vary?

A. The viscosity of cream varies a great deal, depending on the seasons of the year; the cow from which the cream was secured; the feed that has been fed to the cows.

Q. Does the device, which is Defendants' Exhibit 3, have a means of varying the time which the valve is open?

A. Yes. Yesterday afternoon when the machine was demonstrated, the time was varied so as to control the period of time during which the solenoid actuated valve remained open.

The operator or demonstrator could apparently adjust it through as wide a range as would be desired in filling receptacles of the type to be handled in that type of machine.

Q. I call your attention, Mr. Deletzke, to the
1836 fact that this Melikian patent was issued on July 6, 1954 and that the patent in suit was reissued on May 18, 1954.

I also call your attention to the fact that the Melikian patent we are discussing was filed, the application for it, was filed on February 10, 1948, and the original application of the Mojonnier original patent was filed April 4 of 1949.

I mention those dates primarily to bring to the Court's attention that we are not contending that this Melikian patent in itself is a prior art anticipation, but we are using it in conjunction with this physical exhibit because in the testimony of Mr. Melikian, in the deposition which was read yesterday, it was indicated that the structure of this device, which is Defendants' Exhibit 3, and the structure defined in the Melikian patent 2,682,984, are quite similar.

It is a matter of convenience as much as anything else to use the drawings from this patent in connection with this exhibit, Defendants' Exhibit 3.

1837 Q. Mr. Deletzke, the method of time control, for example, illustrated in the Melikian patent is of what nature?

A. I believe the time control mechanism utilized in the Melikian invention is of the variable resistance type, similar to the type used in furnace controls, timing the actuation of controls for furnaces.

Q. Is the element heated in that type of switch?

A. In that type of a unit, the element may be heated, and after a certain length of time the temperature is such as to cause a bimetal element to switch its position.

Q. When you say vary the resistance in the circuit, it would vary the heating time of that element, is that right?

A. Obviously when you vary the resistance of an element like that, the time required to heat it to a certain temperature is varied.

Q. Do you know what type of timing mechanism is in this machine? If you know.

A. No, I actually don't know what happens to be in that machine.

Q. It was covered in the deposition yesterday. I
1838 believe it was referred to as a clock mechanism, which of course is distinct from this particular type of mechanism shown in this patent, but it is a timing mechanism.

A. I don't know what is in there. I know he adjusted it, but I don't know what it is.

Q. I believe Mr. Dempsey stated that it was a clock type timing element when he was demonstrating it yesterday.

Mr. Deletzke, I now direct your attention to the Zsoldos patent, No. 1,639,679. It is the second from the bottom of the first tier of tabs, your Honor.

By Mr. Clement: I will ask the Reporter to mark this chart we are now presenting as Defendants' Exhibit 9 for identification.

(Thereupon said chart was marked Defendants' Exhibit No. 9 for identification.)

By Mr. Clement:

Q. Now that we have it marked, Mr. Deletzke, would you explain briefly what type of machine or mechanism is illustrated in this Zsoldos patent 1,639,679?

1839 A. Briefly stated, the device illustrated in the mentioned Zsoldos patent is a beverage dispenser, so constructed as to enable the dispensing of measured quantities of beverage.

Q. What type of dispensing does it utilize?

A. It is a gravity type operation. In other words, the fluid flows from the reservoir 10 through the connecting elements down through the discharge orifice 16 by gravity.

Q. What type of dispensing valve does it have?

A. The Zsoldos device has a spring loaded dispensing valve.

Q. What is the reference number of the spring?

A. The reference number of the spring is 20. The valve is identified by the numeral 18. The valve orifice opening is identified by the numeral 16.

The valve stem appears to be unidentified, but extends upwardly through the spring 20 to the solenoid armature, which is identified by the numeral 19, into the solenoid—which armature in turn extends into the solenoid 21.

Q. How does that valve open and close, Mr. Deletzke?

1840 A. The valve is opened when the solenoid 21 is energized, which in turn forces the armature 19 downwardly, compressing the spring 20 and moving the valve 18 away from the valve seat 16.

1841 Q. How is the activation of this device instituted?

A. The activation of the device is instituted by the use of a motor driven adjustable cam, which in turn closes the necessary electric circuits to supply the power to the solenoid 21. The motor and the cam are generally illustrated at the base of Figure 1 of the drawings.

Q. Is the cam the green element on this chart, Defendants' Exhibit 9?

A. The cam is the green element on the chart, Defendants' Exhibit 9.

Q. How is that connected to the motor, which I think is numbered 40?

A. I think that is illustrated in another drawing.

Q. Is there a shaft extending from the motor?

A. Well, referring to Figure 3 of the drawings, I think it is illustrated a little more clearly. That shows the motor 40, shaft 38, the cam 30, and what appears to be a transmission or gear reducer, identified generally by the numeral 34.

I will have to check to see what it says that is.

Q. I call your attention to column 2 on page 2, about line 93 or 94.

1842 A. Oh, yes. That is:

"a suitable transmission mechanism 34 to a drive shaft 35, on which is fixed a worm wheel 36,"

and so on.

Q. How is the motor 40 activated or energized?

A. The motor 40 is set in motion by the coin trip mechanism, illustrated at the top of Figure 1. In other words, when a prospective customer wishes to secure a drink from the device illustrated in Figure 1, he would drop a coin in the coin chute 74 which in its downward travel would fall in the box 72, trip the necessary switches, which turn on the power to the motor 40, which in turn would start the cam 31 rotating, and the rotating cam 31 in turn would close the necessary switches for actuating the solenoid 21, thereby opening the valve 18 to start the dispensing of the fluid.

After the cam had rotated through a given cycle, the cam follower would be so actuated as to open the switch which energized the solenoid 21 at the spring 20, and the spring 20 would instantly snap the valve 18 back into closed position, thereby discontinuing the flow of fluid
1843 from the reservoir 10 through the dispensing valve into the receptacle.

Q. Can the machine be used to dispense varying amounts of liquid for, say, a small cup or a large cup?

A. Figure 7 of the Zsoldos patent illustrates an adjustable cam.

Q. Is that the same cam you were discussing before?

A. That is the same cam which I have been discussing before, and which is illustrated more generally at the base of Figure 1 of the drawings, and colored green in Defendants' Exhibit 9.

Figure 7 of that patent illustrates more in detail the structure of the adjustable cam, whereby the period during which the solenoid 21 holds the valve 18 in a depressed or open position can be regulated as desired, thereby obviously controlling the length of time during which fluid will flow through the open valve.

1844 Q. I call your attention to page 4, column 1 of the specification of the Zsoldos patent, and particularly line 19, and ask you if there is a discussion of a hydrostatic head or hydrostatic pressure that would be involved in a dispensing mechanism of this kind in the Zsoldos patent?

A. Page 4, column 1, line 19, reads as follows:

"In a machine, wherein the amount of liquid dispensed is governed by the elapse of time of flow, I have found that in order that the amounts of liquid dispensed may be uniform at all times, it is necessary to incorporate in the

construction, means adapted to compensate for the varying hydrostatic pressure due to varying amounts of liquid contained in the reservoir."

Shall I continue?

Q. Yes.

A. (Reading):

"When the reservoir is full, the hydrostatic pressure therein is considerably greater than when the reservoir is almost empty, so that liquid will flow faster and
1845 under greater pressure in the first instance than in the latter instance, with the result that more liquid may be dispensed from a full reservoir within a given period than could be dispensed from an almost empty reservoir within the same time. There is, accordingly, incorporated in the machine of this invention means for automatically compensating for the varying hydrostatic pressure and this means is best shown in Figure 5 of the drawings."

Q. What is that means that has been referred to there, Mr. Deletzke?

A. The means referred to there in the portion of the patent which I have just read is the throttling valve, identified by the numeral 85, in Figure 1 of the Zsoldos patent.

Q. Is it better shown in Figure 5?

A. Yes, it is shown in much larger scale, and perhaps in a little more detail in Figure 5.

Q. Briefly, how does that valve operate, that compensating valve?

1846 A. I believe, referring again to Figure 1 of the drawings, the valve 85 depends from the valve stem 84, which is provided at its upper end with a float 83. The float 83 floats on the liquid in the float chamber 12.

As the level of the liquid descends in the main supply receptacle 10, it descends equally, in equal amount in the float chamber 12. As the liquid thus descends, the float 83 following the level of the liquid will cause the valve 85 to descend, thereby bringing the smaller reduced portions of the valve element 85 opposite the orifice 13, thereby permitting less restricted flow.

When the valve is in its uppermost position, there is a maximum restriction to the flow afforded by the valve 85.

Q. Is that a means of compensating for the variation in the hydrostatic head in the tank 10?

A. That is a means for compensating for the fluctuation of the hydrostatic head maintained by the liquid in

the tank 10. If the tank is completely full the valve 85 offers a restriction to the flow of the liquid towards
1847 the dispensing valve 18. When the tank 10 is more nearly empty, the valve 85 offers less restriction.

1848 Q. Would you refer to Claim 10 of the Zsoldos patent, Mr. Deletzke?

A. Yes.

Q. Is there a recitation of this compensating valve which you have just described in Claim 10?

A. Yes, in the very first few lines it is stated:

"• • • a normally seated valve for normally precluding the flow of liquid from said reservoir • • •"

Q. I am talking about a compensating valve, not the dispensing valve.

A. Oh, the compensating valve, I see. Did you say Claim 10?

Q. Yes. I am asking you if there is a compensating valve recited?

A. No, I can't—

Q. In Zsoldos, in Claim 10.

A. No, I can't find the compensating valve in Claim 10.

Q. Then, does that claim describe a device that does not have a compensating valve that you described a moment ago?

A. The Claim 10 describes the device generally illustrated in Plaintiff's Exhibit 49, without including the
1849 compensating valve.

Q. This is Defendants' Exhibit 9.

A. Defendants' Exhibit 9. Excuse me.

Q. Mr. Deletzke, I call your attention to another chart which we have prepared which eliminates the compensating float valve as is described and claimed in Claim 10 of the Zsoldos patent and, for the moment, I will ask you to ignore the float valve in the tank 10 and ask you if the mechanism described and claimed in Claim 10 in Zsoldos is illustrated by the chart, which I will have marked for identification as Defendants' Exhibit 11.

(Thereupon said document was marked Defendants' Exhibit 11 for identification.)

By Mr. Clement:

Q. (Continuing.) I was asking you, Mr. Deletzke, if this illustrates what is described in Claim 10 in Zsoldos?

A. Disregarding the float valve which is generally illustrated in purple coloring, the rest of the device falls within

the scope of Claim 10 of the Zsoldos patent 1,639,679, Defendants' Exhibit 11.

Q. 11, yes.

1850 A. 11.

Q. How would this device operate illustrated in Defendants' Exhibit 11 without the float valve which has been added?

A. How would it operate if the valve had not been added?

Q. Yes.

A. If the float valve had not been added, and in view of the fact that the reservoir 10 is so close to the dispensing valve, the amount of liquid dispensed, would probably vary slightly as the level of the liquid dropped in the reservoir 10.

Q. How would that condition be affected if we moved this container 10 up a substantial distance above the valve 18?

A. If you moved it up a substantial distance above the valve 18, the effect of the variation of the level of the liquid in the tank 10 would become less and less as the elevation of the reservoir 10 was increased.

1851 Q. Was that similar to the condition we described with respect to Defendants' Exhibit 3?

A. Identical, as described with respect to the Melikian device.

Q. How would this device demonstrated in Defendants' Exhibit 11, which is the Zsoldos structure, without the compensating float valve—how would it operate if we placed an ordinary float valve in the tank 10?

A. If you placed a float valve in the tank 10 and replenished the liquid in the tank 10 through the float valve, the float valve would maintain a relatively constant level and a relatively constant hydrostatic head in the liquid in the tank 10, and then your discharge through the valve 18 would be similarly constant.

Q. Can you tell from where you are sitting, Mr. Deletzke, what the character of that float valve is?

A. Well, that float valve appears to me to be the same float valve as is illustrated in the Fagan-Mojonnier patent No. 2,147,366 wherein it is identified by the letter O, in other words, the float valve in the upper tank.

1852 Q. How does this mechanism as it is represented in Defendants' Exhibit 11 compare with the mechanism described and claimed in the patent in suit?

A. The mechanism illustrated in Defendants' Exhibit 11 has each and all of the functional aspects, each of the claims, or, rather, the claims of the device described in suit.

Obviously it does not have a rod extending through the reservoir as called for by some of the details, but generally it has all of the elements and the same arrangement for the same function, to produce the same result in the same way.

Q. Does the patent in suit, reissue patent 23,830 refer to beverage dispensers?

A. The patent 23,830, well, it refers to quite a few things. It refers to dispensing beverage, powders, shellac, syrup, milk and a few other things.

Q. Calling your attention to column 2 of the reissue patent, line 24, also.

A. Column 2, line 24:

"an important object of the present invention is to provide a multi-purpose dispensing mechanism that may be used to accurately dispense volumetrically any 1852 free flowing liquid."

Q. Do you recall—let me ask you first, Mr. Deletzke: Was the Zsoldos patent cited by the Patent Office during the prosecution of the patent in suit or the reissue patent in suit?

A. No, the Zsoldos patent was not cited by the Patent Office.

Q. I don't believe I asked you that question with respect to the Winton patent either. Would you answer it with respect to the Winton patent?

A. Neither was the Winton patent cited.

We also discussed the Fagan patent. That was not cited.

Q. I beg your pardon?

A. We also discussed the Fagan patent, the Fagan-Mojonnier patent. It was not cited either.

Q. Was the Engels patent which I think was first discussed, cited by the Patent Office?

A. No, the Engels patent was not cited by the Patent Office.

Q. How does the Engels patent compare with the claimed structure of the patent in suit?

A. The Engels patent compares with the claimed structures in suit very similarly, to the manner in which 1854 the modified illustration of the Defendants' Exhibit 11 compares; the certain details called for in, for

example, claim 1, such as a rod extending through the tank, which is not provided in Engels and neither is it shown in that exhibit, but they all—both the Engels patent and the modified Zsoldos have float controls which maintain a predetermined level of the liquid in the dispensing reservoir. They have time controlled dispensing valves, they have timing mechanisms for the purpose of dispensing measured quantities of fluid through the dispensing mechanism.

1855 Q. Mr. Deletzke, when we began discussion of the prior art, I believe I indicated that we were considering the question of validity of the claims in suit, namely, Claims 1, 6 and 7, with respect to their possible anticipation by the prior art.

Do you have any comment to make on that now that we have fully examined the prior art?

A. In my opinion, the Claims 6, 7—1, 6—

By Mr. McCanna: If the Court please, if he is giving an opinion as to the validity of the patent—

By the Court: Yes, obviously.

By the Witness:

A. In my opinion, Claims 1, 6 and 7 describe nothing more than the Zsoldos device to which a float valve has been added, and in which the float valve has the precisely same arrangement, the same function as it has in hundreds of milk bottle filling machines used in—I say hundreds—perhaps it is thousands of dairies throughout the country—and the functioning of the float valve is precisely the same in the modified Zsoldos as it is in the patent in suit and, therefore, in my opinion since all that these claims describe is nothing more than addition of a

1856 float valve to the Zsoldos machine, it is my opinion that adding such a float valve is not an invention and, therefore, the claims are invalid.

By Mr. Clement:

Q. Mr. Deletzke, will you refer again to the reissue patent itself, the patent in suit, and I would like to very briefly have you examine the portions of the specification of this patent, referring particularly to column 6 and the paragraph beginning on line 3.

A. Column 6, the paragraph beginning with line 3?

Q. Yes.

A. It reads: —do you want me to read it?

Q. I don't think it is necessary to read it. You might take some of the pertinent phrases that appear in that paragraph and tell us what their significance is.

A. Well, I have underlined a few words here, for example:

"The equasion for the steady frictionless discharge from an orifice is one of the first known quantitative relationships in hydraulics and is expressed as follows:

1857 "V = the square root of 2gh."

Well, except theoretically, you never have a frictionless discharge through any kind of an orifice.

Q. Frictionless?

A. You never have a frictionless discharge through any kind of an orifice and the idea that V equals the square root of 2gh is a quantitative formula, also is wrong. The formula that V equals the square root of 2gh is the formula for the velocity of a falling body. It is a velocity formula and not a quantitative formula.

Using the formula V equals the square root of 2gh merely results in giving you the velocity of something and not the quantity of something.

1858 Q. I believe the term "orifice" is used rather extensively in that paragraph. Can you tell us what your definition of an orifice it, very quickly?

A. Well, the simplest form of orifice would be preferably a round hole through a thin sheet of material, through which the material might be discharged either vertically or horizontally. A true orifice would certainly never contemplate having all sorts of restrictions such as valves before and fluid guides after the orifice, which could very appreciably restrict the flow. To apply an orifice discharge formula to any such arrangement would require a great many correction factors.

Q. Mr. Deletzke, I call your attention to the sentence beginning at line 39 in that same paragraph beginning with:

"hence, since the variables * * *"

Would you read that and then explain what it is? Would you explain what the interpretation of that sentence is?

A. (Reading.)

"Hence, since the variables of head of liquid, vis-

1859 cosity, area of the orifice, orifice factor and time interval during which the orifice is open to permit discharge therefrom are all constant, the volumetric discharge for each actuation of the dispenser is also constant

there has, therefore, been provided a very simple arrangement for assuring uniform dispensing in a simple manner which eliminates the difficulties of prior art devices * * *"

Well, I don't read any sensible meaning into the clause itself because it describes a situation which would be purely theoretical and a situation which couldn't possibly be attained.

Q. Well, does it describe an inescapable conclusion in terms of keeping all the variables constant?

A. In that respect, it is purely theoretical. It is purely a theoretical statement and obviously, if all the variables of a formula are constant, the result has to be constant.

Q. Is there any teaching in this paragraph that is new to the art in dispensing liquids?

A. I would say none whatsoever. Every milk bottle filler which has been of the gravity type, of the kind of discharge we discussed, is equipped with a similar
1860 type of orifice valve. They all operate under a hydrostatic head. They are all equipped with a float valve and as far as the theory in this paragraph, in column 6, regarding orifices is concerned, I would say any standard text on hydraulics will give you not the same theory as here, but a more correct theory, including the correction factor which would enable you to use it. There is nothing in this paragraph which explains how you could use the formula.

Q. Is there any reference or any relation between claims 6 and 7 which were issued on the reissue patent and this paragraph we have just been discussing?

A. Claims 6 and 7 contain a great deal of this pseudo scientific language contained in paragraph 6, without making any connection between that, that scientific verbiage and the structure recited in the claim.

In other words, the claims refer to orifice factor but there is nothing in the specification telling you how to compute an orifice factor or, for that matter, what an orifice factor is.

Q. There is also a statement, I think, in those
1861 two reissue claims relative to the control of splash effect.

Q. Do you find anything in the specifications of this reissue patent which teaches anything about the control of splash effect?

A. I do. There is reference in the specification to the control of splash effect, but it is not my opinion that it is the same splash effect that is referred to in claims 6 and 7.

Claims 6 and 7 refer to an individual splash. In fact, I believe they state that the receptacle is filled by individual operation, while the reference to splash effect contained in the specifications—one appears in the column 2 of the patent, lines 45, where it says:

"Another object of the invention is the provision of means wherein the splash effected by discharging the fluid into a receptable may be controlled."

That objective is elaborated on in Column 8 in line 65 where it reads:

"In some installations a number of dispensing units may be placed in a line so that each operates in suc-
1862 cession to fill a receptacle. Where it is desired to control the splash in such an installation the pressure head (or liquid level) maintained in each dispensing unit may be progressively different for each dispensing unit."

In other words, according to the description of splash effect as contained in the specifications, you would have a series of the filling machines of the type illustrated or embodied in the Plaintiff's Exhibit 39, in each of which you had a different level of liquid in the reservoir, while the claims 6 and 7 are not directed to the use of a series of such machines but are directed to one machine.

1863 Q. Mr. Deletzke, referring to Figure 3 of the patent, how would the float valve 24 operate if there were pressure in the feed pipe 27 into the container, or variations in pressure?

A. Well, if there were pressure in the feed pipe 27, the pressure would tend to open the valve and with the net result that if the pressure in the feed pipe 27 varied, the level of liquid level maintained in the receptacle 14 would vary.

As the pressure increased in the feed pipe 27 the level of the liquid level of the tank 14 of the reissue patent 23,830, would rise. As the pressure dropped, the level would drop. That follows of necessity, for the reason that the buoyancy of the float 24 is set to counteract directly the pressure of the liquid inside of the pipe 27 without any outside leverage advantage whatsoever.

Q. What is the practice in the dairy industry as to whether fluids are supplied under pressure or not?

A. You would either use a valve such as is shown in the upper tank of the Fagan-Mojonnier patent 2,147,366 or you would use a sleeve type of value in which the sleeve

1864 is actuated by a float so as not to be restrictive to any great extent to the pressure of the incoming liquid.

Such a valve may not be as sensitive to the incoming flow for the reason that to prevent leakage, they need to be tight. For that same reason, in the Mojonnier—in the Fagan-Mojonnier patent a relatively long arm has been attached to the float so as to multiply the leverage to enable easy actuation of the valve.

Q. Now referring now to the claims of the patent in suit, Mr. Deletzke, I think we have pretty well identified the elements previously that are referred to in Claim 1 of this patent.

By the Court: I think we will take a short recess now.

(Whereupon a short recess was taken, after which the following further proceedings were had:)

By the Court: Proceed.

By Mr. Clement:

Q. Mr. Deletzke, to aid you in the comments on the claims in the patent that are in suit, I will hand you Plaintiff's Exhibits 50, 51 and 52 which have been prepared 1865 to show the relation between the elements of the claims and the elements of the defendants'—or the accused machine. You will note that one of those elements is, I believe, described as a valve mounted on a container for dispensing fluid. Is that correct?

That is in Claim 1.

A. That is correct. That is element 4.

Q. And what element is that in the plaintiff's device as shown in Figure 3?

By the Court: Which one have you got?

By Mr. Clement: That is Exhibit 50, Plaintiff's Exhibit 50, I believe, is it not?

By the Witness: Plaintiff's Exhibit 50.

By the Court: Have I got it here?

By Mr. Clement: I believe they are here, your Honor.

By the Court: Is this 50? Here is 50.

By Mr. Clement:

Q. What element number is that, Mr. Deletzke, the dispensing valve?

A. That would be element 4.

Q. No. I mean in the chart. Are they numbered by elements?

A. You mean these numbers (indicating)?

1866 Q. Yes.

A. That would be the fourth clause of the claim, or the fourth element of the claim.

Q. That description doesn't designate specifically how the valve is to be mounted, does it?

A. It does not. It merely says a valve is mounted on the container, which could be any place on the container.

1867 Q. Would the valve be operable if it were mounted on the side of the tank so that the rod 62 would be disclosed horizontally instead of vertically as shown in this rough sketch which we have now before you?

A. It would be operable to this extent: That the solenoid could open the valve but there would be nothing to close the valve. In other words, insofar as delivering measured quantities of liquid is concerned, it would be an inoperative device.

By Mr. Clement: I will ask the Reporter to mark this sketch Defendants' Exhibit 48 for identification.

(Thereupon said document was marked Defendants' Exhibit No. 48 for identification.)

By Mr. Clement: I will ask to have the second chart marked Defendants' Exhibit 49 for identification, the second rough sketch.

(Thereupon said document was marked Defendants' Exhibit No. 49 for identification.)

By Mr. Clement:

Q. I now show you, Mr. Deletzke, the sketch, the
1868 rough sketch which we have marked Defendants' Exhibit 49 for identification, representing a modified form of a device having a dispensing valve at the bottom of the container with the interconnecting rod between the valve and the solenoid both horizontally outside of the container and ask you if that would be an operable device?

A. That would be an inoperable device. Again, there is nothing to close the valve. The solenoid would open the valve with nothing there to close it.

1869 Q. Then with respect to the valve member and the rod interconnecting the valve with the solenoid, the claim defines an inoperable structure, does it not?

A. That is correct. The disclosed device depends on the effect of gravity for closing it. It of necessity presumes that the valve and solenoid and the heavy rod will be so arranged as to use the effect of gravity to close the valve, but the claim doesn't specify that the valve and the solenoid

must be so arranged that the valve stem is disposed vertically.

Q. I believe you will find in that chart an element described as:

"an interval timer,"

Mr. Deletzke, with reference to Claim 1?

A. Yes, that is the seventh item or clause of Claim 1 in Plaintiff's Exhibit 50.

Q. What type of timer would be defined by that language in the claim?

A. An interval timer?

Q. Yes.

A. It could be an electric motor operating a cam.
1870 It could be an electric clock mechanism of some kind.

It could be most any sort of device that would measure an interval of time.

An interval timer—it doesn't specify anything else. An interval timer could ever be an hour glass with a little sand in it.

Q. What is the next element in the claim?

A. That is the eighth element, and that is:

"means to actuate said timer".

Q. And what does it accomplish as it is described in the claim?

A. (Reading.)

"to energize said solenoid and thereby move said member to open said valve, whereby a substantially constant volume of liquid is dispensed each time said solenoid is energized."

Q. Is there any mention in this Claim 1 of a means for closing the valve or how it is closed?

A. There is no mention in Claim 1 that the valve is ever closed or how it is closed or any reason for closing it.

Q. Then there is a missing element in the claim?

A. Obviously if you are going to have a measured quantity of liquid running out of the valve, you have
1871 to close it sometime, and there is therefore a missing element.

Q. Mr. Fishleigh, the expert witness for the plaintiff, indicated that in his opinion various elements in the structure of the defendants' device or the accused device—I guess we can use the word "defendants'" now—he indicated that various elements in the accused device or devices are the equivalent of the device as claimed in Claim 1 of the patent.

I refer to the:

"member extending through said container for interconnecting said solenoid and said valve."

In your opinion is there an equivalent structure in the defendants' device?

A. In my opinion there is not an equivalent structure in the defendants' device.

Q. On what do you base this opinion?

A. In the defendants' device the valve operates in the reverse order. It operates by an entirely different kind of linkage. It is a spring loaded affair, comparable to what I testified this morning is the conventional type of milk bottle filling valve.

1872 I certainly wouldn't be of the opinion that that element, which is supposed to be new and novel as covered in the claim, is the equivalent of something which has been commonly used for many years.

1873 Q. I am handing you a certified copy of the file history of the original patent, original Mojonnier patent 2,667,990. This has been identified as Defendants' Exhibit 7.

I ask you to refer to page 46 of that file history.

A. I have that page 46.

Q. Will you read the amendments which were made to Claim 10, by amendment filed December 26, 1952, claim 10 being the claim which eventually became claim 1 of the patent that was originally issued?

A. It says:

"In response to the Office action of June 30, 1952, please amend the above-entitled application as follows:

"Claim 10, line 7, after 'solenoid,' insert —mounted on said container—"

Q. To what does that refer?

A. Referring to Plaintiff's Exhibit 50, it refers to the solenoid contained in the housing immediately below the numeral 54 at the top of the reservoir 14.

Q. And what were the words of limitation that were added?

A. The words of limitation were that the solenoid

1874 is "mounted on said container."

Q. Is the solenoid in the accused device mounted on said container? I am referring to Plaintiff's Exhibit 46.

A. The solenoid on the accused device is mounted on the framework below the container. It has no connection with the container whatsoever.

Q. Are there additional limitations that were added?

A. Yes. The amendment proceeds:

"Same line, after the comma (,) insert —a member extending through said container for interconnecting said solenoid and said valve,—"

Q. Do you find a counterpart to that element in Plaintiff's Exhibit 40 or in the structure as shown in the chart which has been marked Defendants' Exhibit 46?

A. No, there is no member extending through the container of Plaintiff's Exhibit 40 or the chart, Defendants' Exhibit 46, between the solenoid and a valve for actuating the valve. There just is no such element there.

Q. Is this claim 10 as amended the same claim that
1875 became claim 1 of the reissue patent?

A. That is my understanding, as I recall from reading the file history.

Q. Would you refer to page 51 of the file history of the original patent, Mr. Deletzke?

A. Yes.

Q. Beginning with the second paragraph, in which, I believe, there is an explanation of these limitations we have just been discussing, will you please read that portion of the file history, beginning at that point.

A. That paragraph reads:

"Claim 10 has been amended to distinguish over the combination of Warren and Ashkenaz relied upon by the Examiner by defining applicant's novel, composite dispensing unit for handling large quantities of freely flowing fluid and dispensing this fluid in accurate, measured volumes. The claim specifically defines structure not shown in the cited references by setting forth that the valve means for dispensing the fluid is mounted on the container,
1876 that the valve means is controlled by a solenoid which is also mounted on a container and that the solenoid and the valve means are interconnected by a control member which is likewise mounted on the container."

1877 Q. Mr. Deletzke, is the structure of the accused device closer to that which is shown in the prior art, which was being overcome by these amendments?

Is the accused device structure closer to that than it is to the structure as it is now defined in that amended claim?

A. You refer to the prior art of Warren and Ashkenaz?

Q. Yes.

A. Let me take a quick look.

Q. We might broaden it and say is it closer to any of the prior art that we have turned up which was not before the Examiner?

A. Oh, yes. To that I would say "Yes." I believe I discussed, well, for example, the telescoped sleeve type valve of Larsen, Lippold, and so on, which certainly are much closer to the accused device than the valve of the Mojonnier reissue patent.

The manner of actuating the valve by linkages which extend outside of the tank, shown in the Warren—

Q. Even the idea of having a member extend through the container is shown in some of the prior art, both that which was considered by the Examiner and that which we have produced that was not, is it not?

A. The idea of having a rod extending through
1878 the container was also shown in Purvis, which was not considered by the Examiner.

Q. Would you consider this Claim 1 to be allowable in the light of the additional art we have now presented, which was not before the Examiner at the time of his allowance?

A. In my opinion the Examiner would not have allowed the Claim 1 in view of the patent Zsoldos and the other art here of record, which the Examiner did not consider, and which art discloses all the elements of the claim in the same general combination.

Q. Mr. Deletzke, would you refer to the file history again, page 45, in the office action dated June 30, 1952.

Is there a statement in there by the Examiner, in the second paragraph on page 45, relating to the addition of the float valve?

A. Yes. In the second paragraph of that office action, it is stated:

"Claim 14 is rejected on the patent to Thompson cited above taken with the patent to Kohr of record. It is obvious that the float control means of Kohr could be used in the tank of Thompson."

1879 Q. We have already discussed other float control means that were not before the Examiner, have we?

A. Yes, we have discussed various float control means.

Q. Such as in the Fagan and Mojonnier patent?

A. The Fagan and Mojonnier patent, and I think there are a few more.

Q. Mr. Deletzke, I now refer you to Claim 6. I think there is an analysis of Claim 6 in Plaintiff's Exhibit 51.

A. Yes, sir.

Q. This is one of the claims which is here in issue. Is there a supply tank defined in that claim?

A. The second item of the breakdown of the claim refers to a:

"fluid supply tank"

Q. Does the accused device have a supply tank?

A. Well, I should step back. You asked for tank—item 1 refers to the supply tank, and item 2 to the supply container. Which one are you asking me about?

Q. I am asking you about the large supply tank, the source of the large supply of fluid.

A. The accused device, as I understand it, has been equipped for the purpose of demonstration in the
1880 court with a small supply tank. But the device as such, as I understand it, does not have a supply tank.

Q. Is the supply tank an element in the combination defined by Claim 6?

A. Claim 6 calls for a supply tank as one of the elements of the combination.

1881 Q. What is the next element of claim 6?

A. (Reading.)

"a fluid supply container."

Q. Does the accused device have such a fluid supply container?

A. Yes, the accused device does have a fluid supply container.

Q. And the next element?

A. I should point out there is no relationship pointed out in claim 6 between the supply tank and the supply container. The supply tank just sort of dangles there somehow.

Q. What is the next element in the claim?

A. (Reading.)

"a bottom delivery outlet."

The device covered by claim 6 and, of course, the accused device both have a bottom delivery outlet.

Q. Is there a mention of orifice in that next element? Is there a mention of orifice or a given orifice factor?

A. You say in the next element 5?

Q. What element are we referring to now?

A. We have gotten through 4.

1882 "a valve in said bottom outlet—"

No, that was element 3,

"a bottom delivery outlet."

Now in element 4, the fourth element is:

"a valve in said bottom outlet."

Q. I am sorry. I was doubling back, I believe.

Element 3 says:

"a bottom delivery outlet having a given orifice factor and area of orifice."

Could you give me your impression of what that language means?

A. Well, insofar as we have gone in this claim now, I would have no way of knowing from claim 6 what a given orifice factor could mean. There is nothing in the claim so far to indicate what it might mean.

Q. What is the significance of the word "given"?

A. Well, "given" is supposed to specify something specific, something which has been determined. But there is nothing preceding the claim which has even mentioned an orifice factor, much less a given orifice factor.

Q. The same comments apply, I presume, to a
1883 given area of orifice? I believe the word "given" modifies both orifice factor and area of orifice, so it would be a given orifice factor and a given area of orifice. Do the same comments apply to a given area of orifice?

A. Yes. That is the first reference to a given area of orifice, and there is nothing preceding.

Q. Is there anything in the specification relative to what the given orifice factor and given area of orifice should be in terms of dimensions?

A. There is nothing in the specification whatsoever as to what a given orifice factor might be or what the area of orifice should be or how it should be computed.

Q. And the next element, Mr. Deletzke, is what?

A. (Reading.)

"a valve in said bottom outlet operable between—"

Do you want me to read the rest?

Q. Well, that is the element that you already indicated was not positioned other than just being on the container, is that correct?

A. Well, it says:

1884 "in filling coaction with said outlet."

Actually the container as illustrated in the patent has no coaction whatsoever with the outlet valve. It is merely positioned in alignment below it, and there is no contact between them. What the filling coaction could be, I don't know.

1885 Q. What is the next element, Mr. Deletzke?

A. (Reading.)

"means operable—"

then a long statement—

"—to deliver said fluid from said main tank to said fluid supply container and to maintain a substantially constant preselected hydrostatic head of the fluid in said supply container."

Q. Mr. Deletzke, what does the word "preselected" mean in that claim?

A. Well, so far there is nothing to indicate what "preselected" would or should be.

Q. Would you read on, please?

A. (Reading.)

"preselected hydrostatic head of the fluid in said supply container, said hydrostatic head having a predetermined value with relation to said orifice factor and area of orifice whereby to effect controlled relatively rapid continuous flow."

Q. Mr. Deletzke, is there any meaning you can ascribe to a hydrostatic head having a predetermined value
1886 with relation to said orifice factor and area of orifice?

A. Well, there is certainly nothing in this claim so far. I will go farther, there is also nothing in the specification to establish what relation there should be between such a predetermined value of orifice factors and hydrostatic heads. No examples are given.

Q. Are there several hydrostatic heads shown in the drawings?

A. In the drawings of the reissue patent?

Q. Yes. I refer to Figure 6, for example, as against Figures 3 or 5.

A. Well, Figure 3 has one hydrostatic head. Figure 5 would appear to have another. Figure 6 obviously has still another.

Q. Does the valve in Figure 6 labeled 106 appear to be the same valve as the valve 43 in Figure 3?

A. In so far as I have been able to determine from the drawings or from the specifications, they are the same valve.

Q. Yet there is a different hydrostatic head in those two figures, is that correct?

A. That is correct.

Q. Would you continue reading, Mr. Deletzke?

1887 A. (Reading.)

"whereby to effect controlled relatively rapid con-

tinuous flow of the fluid from the supply container to the said individual container when the latter is in said filling position."

Q. What is the meaning of that clause?

A. I also will have to say again that there is nothing in the claim so far to tell you what relatively rapid flow would be or, in other words, there is no basis in the claim to that point to explain what these various factors are supposed to be.

Q. Is there any portion of the specification which further defines what must have been meant by the phrase just read?

A. No, there is nothing in the specification either. The specification uses the same general language without explaining the language or without giving any examples to indicate just how you could apply this supposed knowledge.

Q. Is there a disclosure in the patent of the use of a support for the float of variable height?

I am referring back to those drawings which we have just examined, which show the different hydro-

1888 static heads in Figure 6.

A. I missed the first part of the question.

Q. Is there a showing in the drawings of the patent in suit of a float valve supported at a different height than is shown in Figure 3?

A. Oh, yes. Figure 3 shows the float valve supported at one height, and Figure 6 shows the float valve supported at another height, appreciably lower.

1889 Q. Is there any explanation of how the structure of the valve would be adjusted to the hydrostatic head?

A. There is no explanation as to how you would adjust it. Apparently, according to the illustration, you would merely have to use a different part of a piece of the machinery because the supply pipe 27 in each instance seems to be permanently fixed to the lid 23.

Q. The patent doesn't disclose any arrangement for adjusting the length of the tube 27?

A. That is correct. As far as I can determine there is no provision whatsoever for making any adjustment in the length of the supply tube 27, and that in turn obviously determines where the valve of the float valve mechanism will have to seat.

Q. Just by way of recapitulation, Mr. Deletzke, is there any disclosure in the specification which indicates the mean-

ing of the phrase "predetermined value in relation to the hydrostatic head"?

A. Predetermined value of the relation to the—

Q. The phrase "predetermined value." We said a hydrostatic head of predetermined value. Is there
1890 any teaching in the specification as to what that predetermined value should be?

A. There is no teaching. It is mentioned, I believe, in column 6 in about the same way in which it is mentioned in the claim. In other words, you don't know what it means but it is mentioned.

Q. Is there any teaching in the specification of what the predetermined value of the hydrostatic head with relation to the orifice factor should be?

A. No, there is no teaching whatsoever in the claims or in the patent as to what any of those predetermined values of hydrostatic head, orifice factor, area of orifice, any of them, of what they should be.

Q. That clause "area of the orifice," as well?

A. Area of the orifice, that is not disclosed either.

Q. We have already discussed that there is no support in the specification for this "relatively rapid flow—"

I beg your pardon. We were talking about splash effect before. I am now talking about the relatively rapid
1891 flow, which is mentioned in this claim. Is there any disclosure in the specification which teaches how to effect a relatively rapid flow of the fluid?

A. No, there is no disclosure, as I recall, or a teaching as to how to effect the relatively rapid flow. I believe it mentions that they would like to attain relatively rapid flow.

Q. That isn't even mentioned in the theory paragraph we first examined, is it?

A. I don't recall that it is mentioned in the so-called theory paragraph, in column 6.

Q. What is the next element of the claim?

A. That is item 6:

"a timer for controlling the operation of said valve."

Q. And the next phrase?

A. That is item 7:

"said timer having a starting switch and operating to control a continuous uninterrupted time period in response to the initial actuation of said switch."

Q. Does the next phrase indicate that the timer controls

the valve to hold it open continuously throughout
1892 a time period?

A. (Reading):

"said timer controlling said valve to continuously hold open said valve throughout said time period whereby to deliver said predetermined flow and quantity of fluid in a single complete operation."

Q. Is there anything in the claim, in that portion, which indicates how the valve should close at the end of the time period?

A. There is nothing whatsoever in the claim to indicate that. Neither is there anything in the claim as to the necessary structure of the parts from which it would inherently follow that the valve would close itself.

1893 Q. Is there any mention in the claim of the valve being moved under the influence of gravity?

A. There is no mention in the claim of such fact.

Q. Is this the same deficiency you previously pointed out with respect to Claim 1?

A. That is correct. As far as the claim is concerned, the valve would stay open indefinitely.

Q. What is the remaining portion of that phrase?

A. That is the ninth element:

"said timer being adjustable to vary said time period and—"

Q. Excuse me. I think we had not gotten clear through the other phrase,

"whereby the preselected constant factors,"

right in the middle.

A. All right.

"Whereby the preselected constant factors of said hydrostatic head in the supply container in said orifice delivery produce relatively rapid filling of said individual container and control of splash effect of the fluid in its discharge into the said individual container"

1894 Q. I believe we have already discussed that control of splash effect, have we not?

A. That is right, we have.

Q. Is there any teaching of this type of control as defined in this claim in the specification?

A. There is no teaching whatsoever in the specification as to the type of splash control defined in this individual filling operation called for by this claim.

Q. You previously indicated there was nothing in the specification teaching how to get a rapid filling. Now in

addition, the term "said orifice delivery" has been brought into the picture.

Do you find any antecedent for that phrase, that is, "said orifice delivery," either in the claim or the specification?

A. There is no antecedent in the claim or any mention in the specification of the clause "orifice delivery." The only mention of that clause is in the claim.

Q. So is there any meaning you can attribute to the language:

"Whereby the preselected constant factor,"

1895 and so on produces relatively rapid filling?

A. Since you don't know what the clause could possibly mean, you can't attribute any meaning to it.

Q. Does the phrase:

"said orifice delivery"

mean anything to you?

A. Not in the light of what has been mentioned in the specification and in the claims.

Q. In the last clause you previously read from this Claim 6, we have already covered the fact that it refers to controlled splash effect. There is no mention of that in the specification about this type of control?

A. The only mention in the specification of splash effect is when you use a series of fillers and fill a bottle in steps, a little under each filler.

Q. But the phrase in Claim 6 that we have just considered doesn't define that type of splash effect?

A. Claim 6 refers to the complete filling of a receptacle at one time under one filler.

Q. Is there any disclosure or teaching of a control of splash effect by the two factors of constant hydro-

1896 static head and orifice delivery in the specification?

A. No, none whatsoever.

Q. Is there any teaching in this phrase in the claim of how to obtain a controlled splash effect?

A. Not in this claim. There is nothing in here because—

Q. Have you observed anything in addition to what is mentioned in the specification or claims which is incorporated in the plaintiff's machine, Plaintiff's Exhibit 39, to accomplish a control of splash effect?

A. Yes. Obviously that is the nozzle with the slot on the side which is very similar to the nozzle disclosed in the Hothersall patent, the express purpose of which is to prevent the splash inside of the bottle.

Q. In your opinion, Mr. Deletzke, would Claim 6 be

allowable over the prior art in the light of what we know now about the prior art and what was not before the Examiner at the time he allowed this claim?

A. In my opinion the claim boils down to the few structural elements, and as such there is nothing about the combining of those elements which is not taught by the prior art. In my opinion the claim should not have been allowed.

1897 Q. Mr. Deletzke, will you refer to Plaintiff's Exhibit 52, which is a breakdown of claim 7 of the patent in suit.

This claim 7 resembles claim 6 very closely in many respects, does it not?

A. That is correct. It is very similar. It has a few more details.

Q. Referring to the language:

"a fluid delivery line interconnecting said source"

What element is that in this chart? 3, I believe, is that right?

A. Yes, element 3. Well, element 3 refers to the pipe 21 connecting the source of supply 16 with the reservoir 14.

Q. That is an element added to this claim, is that right?

A. That is one of the elements added as distinguished from claim 6.

Q. Again in this claim, is there any indication of how the valve closes?

A. There is nothing in claims 1, 6 or 7 to indicate how the fluid dispensing valve could be closed, and 1898 there is no structure in any of the claims which defines an arrangement which of necessity would provide for the closing of the valve.

Q. Is the float element defined differently in claim 7? I am referring to element 7 now.

A. You are referring to element 7?

Q. Yes.

A. (Reading):

"a float in said supply container operable to control the first mentioned valve to replace the fluid in said supply container as it is dispensed and also operable to maintain the fluid in the supply container at a preselected level".

You ask whether that is different than the way it is described in claim 6?

Q. I think you had better read on. I think the change is in the next phrase.

A. (Reading):

"providing a hydrostatic head of predetermined value with relation to said orifice factor and area of orifice whereby to effect controlled relatively rapid continuous flow
1899 of the fluid from the supply container to said individual container when the second mentioned valve is held open".

Q. Many of the terms used in that phrase are the same as were used in claim 6, is that correct?

A. Well, generally stated all these phrases used in the inset portions of the breakdown of claim 7 are substantially the same as those set off by themselves in the breakdown of claim 6. They all relate to the so-called scientific explanation of the invention as contained in column 6 of the reissue patent. Actually they don't define anything.

Q. In claim 6 the float element, I believe, or the element 5 is comparable to the float element, is that correct, defined as means operable in claim 6? Not claim 7.

I asked you about the differences in the claims, and I think claim 7 has a specific recitation of a float, whereas claim 6 merely says means in element 5. Is that correct?

A. Claim 5 calls for a means operable for performing the function of the float valve while item 6, rather
1900 item 7 of claim 7 calls for "a float in said supply container," and so on.

Q. But the functional language describing how that particular means or float operates is substantially the same, is it not?

A. That is correct. One calls it a float and the other calls it a means.

Q. And the deficiencies pointed out with respect to claim 6 are equally applicable to claim 7, are they, in that respect?

A. In that respect, it is the same verbiage, and the same criticism applies. There is no ground laid in any of the claims for supporting the excess verbiage.

1901 Q. In your opinion does this Claim 7 we have just examined have such a nature that you would consider it allowable over the prior art we now have before us, which includes many patents which were not cited by the Examiner, such as Zsoldos?

A. I would make precisely the same comment I made on Claims 1 and 6. In my opinion Claim 7 would not be allowable over the art of record here.

Q. Mr. Deletzke, great emphasis has been put upon

the fact that this device, as defined in this patent is capable of unusual accuracy in the volume of fluid dispensed.

A. Yes.

Q. What is one of the principal factors that should be held constant in order to get anywhere near a constant volume of dispensed liquid?

A. There are a number. You would want to keep the level of the liquid supplied to the valve relatively constant if you wanted to have a constant discharge during repeated operations.

Q. But if you kept all these variables constant, you would expect to get a constant discharge in terms of volume? If you could keep them constant.

A. Well, those same variables are kept constant
1902 to precisely the same degree in all rotary type of commercial bottle fillers. They all work the same way.

Q. So is there any teaching in this patent relative to that last problem which is a contribution to the art of filling?

A. You mean the use of a float valve in a milk bottle filler reservoir?

Q. The maintenance of the factors, the variables, constant.

A. They are all kept constant in all filling machines. They have a constant head, a constant level, uniform or constant viscosity of the product. They all have the same factors, and they try to maintain them all constant in precisely the same way. They use the same apparatus and structure to do it.

Q. In view of this analysis, would you say the specification of this patent in suit is adequate?

A. In view of all the comments contained in Claims 6 and 7 as to orifice factor and orifice discharge, there is nothing in the specification to say what those terms mean or how you can possibly use them, how they are computed.

It is merely a lot of words which are used in hy-
1903 draulics theory, which haven't been eleborated on here sufficiently enough to enable anybody to use them.

Q. Would you say that Claims 1, 6 and 7 are definite in their description of a particular structure?

A. I would say that Claims—did you say 6 and 7?

Q. All the claims in suit.

A. Well, I would say all the claims in suit call for a

supply tank. None of the claims in suit specify what particular relation there should be between a supply tank and a supply container.

Obviously they contemplate having the supply tank at a higher elevation than the container, but there is nothing in the claims to indicate that, and there is nothing to limit such structure.

Similarly, each of the claims contains relatively long functional statements as to advantages which can be obtained by the use of the structure, but there is nothing, there is not sufficient structure in any one of the claims to obtain the primary objective of any one of them; that is, to discharge a predetermined measured quantity of liquid, and that results primarily from the fact that none of the claims include an explanation of how the valve is
1904 going to be closed or when it is going to be closed, and obviously, unless you close it, you can't get a predetermined measured discharge.

Q. Can you apply these three claims to the accused device, such as Plaintiff's Exhibit 40?

A. No, I couldn't apply the claims—you mean could I apply the claims? I said before the claims didn't apply to the accused device. I obviously can't apply them, in my opinion.

1905 Q. Would you then consider Plaintiff's Exhibit 40 to be an infringement of these three claims?

A. I said before Exhibit 40 doesn't have some of the structure specifically called for by any of the claims 1, 6 and 7.

There is a point I should make, that each of the claims 6 and 7 are very specific as to what is the valve element and what is the orifice element, and that the solenoid acts, at least indirectly, to move the valve element, which is the ball-shaped element at the bottom of the valve stem.

That is a structural difference which cannot possibly be found in the accused device, Plaintiff's Exhibit 40.

Q. Is there any element comparable to the spring element utilized in the accused device, the fluid dispensing valve of the accused device?

A. I said before that in the patented device, the valve is seated by gravity. In the accused device, the valve is seated by the spring—I think it is spring 80, if I can see correctly from here.

Q. Is the accused device operable without that element?

1906 A. If you should remove the spring from the accused device, the valve would fall open and stay open, or the valve assembly. In other words, the outer sleeve would merely slide down and stay there.

Q. Is the combination defined in the patent in suit a novel combination in terms of the results of the combination?

A. Is it? You had better read that to me.

By Mr. Clement: Read the question, please.

(Whereupon the question was read as above recorded.)

By the Witness:

A. Well, not in my opinion. Since all the elements are shown in the prior art in the same general arrangement for the same purpose, accomplishing the same results. It couldn't possibly be novel.

By Mr. Clement: I would like to introduce in evidence at this time the chart marked for identification Defendants' Exhibit 47, and have the identification mark stricken. May that be introduced, your Honor?

By the Court: Yes, it may be received.

(Said document, so offered and received in evi-
1907 dence, was marked DEFENDANTS' EXHIBIT NO. 47.)

By Mr. Clement: I would like to introduce the chart which has been marked Defendants' Exhibit 9 for identification.

By the Court: It may be received.

(Said document, so offered and received in evidence, was marked DEFENDANTS' EXHIBIT NO. 9.)

By Mr. Clement: I would like to introduce the chart which has been marked Defendants' Exhibit 11 for identification.

By the Court: It may be received.

(Said document, so offered and received in evidence, was marked DEFENDANTS' EXHIBIT NO. 11.)

By Mr. Clement: I would like to introduce the compilation of patents, which I believe has been marked Defendants' Exhibit 6, which is on your Honor's desk.

By the Court: It may be received.

(Said document, so offered and received in evidence, was marked DEFENDANTS. EXHIBIT NO. 6.)

1908 By Mr. Clement: I would like to introduce the rough sketch, which has been marked Defendants' Exhibit 48 for identification.

By the Court: It may be received.

(Said document, so offered and received in evidence, was marked DEFENDANTS' EXHIBIT NO. 48.)

By Mr. Clement: I would like to introduce the rough sketch which has been marked Defendants' Exhibit 49 for identification.

By the Court: It may be received.

(Said document, so offered and received in evidence, was marked DEFENDANTS' EXHIBIT NO. 49.)

By Mr. Clement: That is all.

By Mr. McCanna: I would like to cross-examine, but I was wondering whether it is about recess time.

By the Court: You mean you couldn't finish in seven minutes?

By Mr. McCanna: I hardly think so, your Honor. I have several hours.

By the Court: Would you like to go to Monday 1909 morning?

By Mr. McCanna: Yes, your Honor.

By the Court: 10:30 Monday morning, gentlemen.

(Whereupon, at 4:25 o'clock p. m., on Friday, June 3, 1955, an adjournment was taken until Monday, June 6, 1955, at the hour of 10:30 o'clock a. m.)

* * * * *

1911 And thereupon the following further proceedings were had herein:

By the Clerk: Case on trial.

By the Court: Proceed.

NORMAN E. H. DELETZKE, called as a witness on behalf of the Defendants, having been previously duly sworn and examined, resumed the stand and testified further as follows:

Cross-Examination by Mr. McCanna.

By the Court: Proceed.

By Mr. McCanna: Good morning, your Honor.

By the Court: Good morning.

By Mr. McCanna: We have the cross-examination of Mr. Deletzke.

By Mr. McCanna:

Q. Mr. Deletzke, in your testimony, in the transcript at page 1602, you were talking about the conventional gravity type fillers and at the bottom of that page, you said:

"As the vertical motion of the bottle continues, the 1912 valve is opened and the liquid starts to drain out of the filler reservoir through the valve into the bottle. That filling procedure continues while the bottle rides around the filling table of the filling machine, until it reaches, approximately reaches the discharge station.

"At that station, that is, at that discharge station, the bottle pedestal is again lowered and as the bottle is lowered, the valve closes. As soon as the valve is closed, the bottle will have reached the discharge station and at that station, suitable cam mechanism will engage the bottle, push the bottle off of the bottle pedestal, usually onto a slide table, over which the bottle is slid by another set of star wheels and into the capping station."

Now, did you intend to imply that the amount of liquid which is filled into the bottle is dependent upon the length of time that the valves are open?

By the Court: What kind of device was he talk-
1913 ing about?

By Mr. McCanna: The conventional gravity type filler.

By the Witness: Did I intend to imply, you say?

By Mr. McCanna:

Q. Yes, that the amount of liquid which is filled into the bottle is dependent upon the length of time the valves are open.

A. It would be partially correct.

In most instances, in filling the glass type of milk bottle, the bottle is completely full at the time it reaches the discharge station but the machines are so timed, that the bottle is completely filled just before it reaches the discharge station. Otherwise you would waste the capacity of the machine. The machines are rated, we will say, for 50 to 75 bottles per minute and if you have the bottle full half way around, you are wasting half of the capacity of the machine.

1914 By Mr. McCanna:

Q. Now Mr. Deletzke, I would like to have you explain more in detail, though, just what happens in these gravity fillers, pointing out just what determines the amount of liquid which goes into each bottle.

A. Now you are talking about filling what kind of a bottle?

Q. Well,—

A. A glass bottle?

Q. Say a glass bottle. That is what you were talking about.

A. As I have said, in filling glass bottles, these bottles are completely full by the time they reach the discharge station if the machine is operating properly. And, since they are full, you can put no more into them.

Q. Well, my question was: What determines the amount of liquid which goes into each bottle?

A. The size of the bottle.

Q. Solely the capacity and size of the bottle?

A. That is correct. Assuming, now, that you have enough time elapsed between the commencement of the filling and the discontinuance of the filling to permit
1915 enough liquid to run into the bottle. If you run the machine too fast, the bottle wouldn't be too full.

Q. If I were to slow down such a machine and run it at half its normal speed so that the valves remained open twice as long, what effect, if any, would that have upon the amount of liquid which the machine would fill into each bottle?

A. On the amount of liquid?

Q. Yes.

A. Well, the bottle would be full half way around, as you just stated it. It would be filling precisely the same amount of liquid. If the bottle is full, you couldn't put any more into it.

Q. The bottle would be full?

A. Assuming that there is enough time, again.

Q. Yes. Under the assumption you slow it down to half the speed.

A. In each instance, you have to allow enough time to permit the bottles to be completely full and normally the machines are operated at their rated capacity and it is such that the bottles are—

Q. Well, I asked you what might be a hypothetical question.

1916 A. I see.

Q. Assuming that you slowed it down to half the speed—

A. Yes.

Q. You would still fill the bottles full?

A. If it would fill it at the regular speed. If the bottles would be full at regular speed, obviously if you slowed down to half speed, it would be full before it got to the discharge station.

1917 Q. Now on page 1604 of the transcript, also in discussing gravity type fillers, you were asked:

"Q. Is that the type of flow that is utilized in the plaintiff's machine, such as is exhibited in Plaintiff's Exhibits 37 or 39?"

And you replied:

"A. It would be precisely the same type as used in Plaintiff's Exhibits 37 or 39, or any of the other many varieties of gravity type bottle fillers. They all operate on the same principle of using a predetermined depth of liquid in the reservoir to cause the liquid to flow through the valve into the bottle at the desired speed so as to fill the bottle completely by the time it has reached the discharge station on the bottle filler."

Now, Mr. Deletzke, what would happen if the level of the liquid in the bowl of a gravity type bottle filling machine such as you were discussing, dropped by a substantial amount, say, two or three inches?

1918 A. In the type of machine that I was discussing, you wouldn't have a drop of two or three inches. You would have a float valve in there to maintain the level. I don't know the situation which you would visualize where the level would drop.

Q. Well, isn't it a fact that it is a common practice when reaching the end of the run of a gravity filler to slow down or to stop the filler to allow the bottles to fill until the bowl is completely empty?

A. At the end of the run, I would say in a milk bottle filling procedure, which might be a minute out of five or six hours of operation, you would either stop the machine and empty the bowl or you would run the machine, turn on the motor and stop it so that the bottles would move a little at a time to be sure to get the last few bottles

full. It wouldn't be the normal operation of the machine at all—it would be a very abnormal operation of the machine to try to fill the last few bottles.

1919 Q. Now, isn't it a fact that many of the gravity type milk bottle fillers are operated without floats, by simply putting a quantity of milk into the bowl and running until the milk is used up, or regulating the level by visual operation?

A. I believe I testified that the small type of machines that are known in the industry as hand type fillers are usually never equipped with a float valve. The milk is filled into a small tank. The tank may have a five-gallon capacity, maybe less, and the operator merely holds down a handle until the bottle is full, and probably does that with one hand while with the other hand he is operating a capping machine to put the cap on some other bottles that have been filled.

That type of small machine usually does not have a float valve. It is used oh, in small towns or some local dairyman who wants to fill a few dozen bottles a day.

Q. Have you ever seen any of the larger gravity type fillers in commercial operation without float valves?

A. You mean large rotary, the automatic type machines?

Q. Yes.

A. No, I don't recall seeing large rotary ma-
1920 chines in operation without a float valve. They are a continuous machine. The milk flows in continuously, and it flows out continuously, and the level is regulated by a float valve.

Q. Now isn't it a fact that the purpose of the float in the gravity milk bottle filler is primarily to keep the bowl from overflowing, and that variations in level of the bowl do not affect the amount filled into each bottle, assuming the filler is not running too fast?

A. I would say that is absolutely not correct—the statement that counsel just made is not correct.

Q. That is what I wanted your opinion on, Mr. Deletzke.

A. The float valve is essential and is essential to maintain an accurate level. The machines are so designed so that the valve will discharge the right amount of liquid during the period of time during which the machine makes one rotation while the bottles are riding around, and if the level isn't right enough milk will not come out to fill the bottle by the time the bottle has reached the discharge station.

Q. I thought we had covered the fact that the amount of milk dispensed into the bottle is determined by
1921 the size of the bottle.

A. Oh, no, I didn't say that. I said in a rotary filler the amount of milk dispensed is determined by two factors: One, you have to have the machine running at the right speed; and the second, they are so designed and operated under such operating conditions that the bottle is just filled, just before it reaches the kick-off station.

How much flows into that empty bottle is determined by the pressure of the milk behind the valve and the period of time during which it is open and the size of the valve.

1922 Q. Isn't it true that Cherry-Burrell advertises a feature of their gravity filler over fillers such as the Mojonnier Brothers vacuum filler that the bowl can be completely emptied in filling?

A. I couldn't tell you what their advertising is—is it the advertising now?

Q. I am asking you what you know about their advertising. You were with them for many years.

A. That is right, and you are comparing now—you are asking whether I know what they are advertising between their machine and the Mojonnier machine?

Q. The vacuum machine, yes.

A. Frankly, I don't know that in their advertising that they compare their machines with any particular other competitor's machine by name. They may say their machine has lots of advantages, but I question whether they pick out any particular competitor and point out the advantages of their machine over one particular competitor's machine.

Q. What about this particular feature that I am asking you about?

A. Well, ask me again, will you, please?

Q. That Cherry-Burrell advertises that in their 1923 gravity filler the bowl can be completely emptied.

A. Do you have a piece of that advertising that I could see? I hate to testify about advertisements of a company as contrasting the products of one company with another when, to the best of my recollection, they don't follow that policy in their advertising of criticizing another company's products or saying that their machine is better than one other company's machine when there are many companies in the industry.

They probably contend that their machine is as good or better than anybody's, but I don't believe they pick out any particular company.

Q. You are not familiar then with that feature?

A. Offhand I do not recall that they ever advertised that their machine was better than Mojonnier Brothers. Now they may have. After all, they turn out advertising by the tons.

Q. I am only talking about that particular feature of being able to run until the bowl is empty.

A. It is altogether possible.

Q. You don't recall?

A. It is altogether possible. I don't recall,
1924 no. I couldn't possibly read all the advertising they turned out if I spent all my time at it.

Q. Now at page 1606 of the transcript, in which you are also talking about gravity fillers, you were asked:

"In those which you described which actually depended upon the operater to determine the level to which the liquid was filled in the container, would you say the operator was doing in such an instance what is done in this device by the timer and the solenoid that operates the valve?

"In other words, is this a mechanized version of that type you have described? Does the timer not determine the time of filling so that it is shut off after the container is filled to a proper level?"

And you answered:

"Well, I should say, I believe, that in the filling of bot-
tles such as the Seal Cone type of paper bottle, or cer-
1925 tain other receptacles, the operator with the hand type filler could watch and permit as much liquid as he liked to run into the bottle."

Do you know of any instance in the dairy industry in which commercial production filling on a gravity filler was carried out by depending upon the operator to determine the level to which the liquid was filled in the container?

A. Any instance in the dairy industry in which the level of a liquid filled into a container is determined by the operator?

1926 Q. Yes, in regular commercial production filling.

A. Now you are talking about bottle filling, not can filling? In can fil!ng—

Q. Yes, we are.

A. In can filling that is the usual procedure. The oper-

ator stands, opens the valve, and when the can is full he shuts it off, and that is carried on in dairy plants. For example, milk that is sent to the restaurants is usually in a larger container, not in quart bottles.

Q. You were talking about paper bottles, and that is the question I read you.

A. That is why I asked you what you were talking about, were you talking about five-gallon containers or paper bottles, and you said "any container."

Q. Paper bottles.

A. Now offhand, I do not recall of an instance where the operator stood and filled paper bottles and watched until they were full because most instances of hand operation bottle fillers that I have observed have been on glass bottles.

But I believe the Mojonnier patent in suit specifically points out that the machine can be operated manually.
1927 In other words, according to the Mojonnier patent in suit, the man would stand there and operate the machine manually without the controls, I presume, and fill the bottles.

Q. I believe you have answered the question previously.

A. I see.

Q. Now in the transcript, at the bottom of page 1606, you said this:

"But the operator certainly could determine with the hand type of filler, could fill the bottle half full, a quarter full or completely full, because he could shut it off, just like you would shut off the spigot on a water hydrant when you got ready to."

Have you ever seen a commercial operation in a dairy in which the gravity filler was used to partially fill glass bottles in the manner you have described?

A. For commercial resale, we will say, of the bottles? Oh, I think when they are filling bottles commercially, the purpose is to fill them completely.

I have seen the hand fillers used frequently to put
1928 in a little or put in a lot in testing at the plants and so on.

Q. I meant in regular commercial operation.

A. Well, no. In commercial operation, as far as I know, they fill the bottles. I say I have only seen them used on glass bottles, as I recall, and they are always filled to the very top.

Q. Have you seen such an operation in which paper bottles were partially filled?

A. On a hand filler? I think I just said before I don't recall having seen a hand filler used on paper bottles, but that, of course, doesn't mean a man can't shut it off when he wants to. It is merely a matter of taking his foot off the treadle and the valve closes.

Q. The operator can't see through a paper bottle to determine the level, can he?

A. Well, I imagine that depends on the lights you have, how the lights are on the filler. I wouldn't say you could see through them very easily, but probably well enough to see the line of liquid generally in the paper bottle.

1929 Q. Have you ever seen a commercial operation in which aerosol containers were partially filled?

A. No, I have never seen an aerosol hand filling operation whatsoever as I recall, excepting these demonstrations here in court. That is the only one I recall.

Q. In your opinion would it be practical to partially fill aerosol containers by hand on a gravity type filler?

A. Would it be practical to fill aerosol containers?

Q. Yes, in regular commercial operation.

A. Now what are you going to fill them with? Somewhere, I think, the testimony established here that some are filled with a liquid already under pressure, and some are filled with part of the liquid without pressure, and then the propellant is added. Now when you ask me whether I think it is practical—

Q. I will say the first filling without pressure.

A. Do I think it is practical to fill them partly?

Q. Yes.

1930 A. I wouldn't see any reason why you couldn't fill any quantity you wished into a container and shut off the valve and have it half full or a quarter full.

Q. In commercial operation in filling?

A. I think the testimony was that that was—that these machines, the plaintiff's exhibits, were used commercially for that purpose.

Q. We said by hand operation on a gravity filler. That is what we are talking about.

A. Oh, now you are asking me whether that—well, frankly, I don't know of any milk bottle filler of hand-operated type that would be particularly made for filling aerosol bombs.

In each one of these instances you have a nozzle sticking

into the machine, and I don't believe that any of the hand fillers I have seen have that particular kind of a nozzle. They have, we will say, the conventional type of milk bottle filling valve. Those are intended to be put into the neck of a milk bottle and to be actuated by the bottle.

Now whether or not these type of cans could be used
1931 or you could make a can to fit that kind of valve, if you had the can to fit it, and you maintained a level in the bowl that held the valve open for a given period of time, it would give you the same kind of measured flow you get here. When I say here, I mean on the machine like Plaintiff's Exhibits 39 and 37.

Q. Do I understand your testimony to be then that the operator would stand in front of this hand-operated gravity filler and determine, by his own judgment, when he should shut it off for the partial filling?

A. No, I should imagine you would run some tests to see, just like you do on this filler. This filler doesn't operate the same on all liquids.

If you want to fill milk, you have to set it for a certain period of time to dispense a quart of milk. If you want to fill cream, it will have to operate longer. You have to conduct experiments to know just how long the valve should be open. At different seasons of the year the valve will have to be opened differently because the viscosity of cream varies in different seasons of the year, different parts of the country.

1932 Q. Under this circumstance that I am asking you about, the critical point would have to determined by the operator?

A. That is right. We will say that by testing the operator finds out that by holding the valve open for five seconds it will dispense a pint of liquid of the type you are wanting to dispense. I would say that using the same liquid and the same level in the bowl and the same valve, if you hold it open five seconds, the second time it will dispense substantially the same quantity of liquid.

1933 Q. Now at page 1608 of the transcript, also talking about gravity fillers, you were asked:

"Now with respect to paper cartons, could the type of machine you just described in which the valve was opened by contact with the bottle itself be utilized successfully?"

And you answered:

"Oh, yes, indeed. That is the way it was used a great deal."

Now I am asking you, do you know of any instance in which a filler, in which the valve is opened by contact with the bottle itself, is used for the filling of American Can, Pure-Pak or Seal King paper cartons for milk?

A. American Can? I think my testimony—I don't have a copy of the record here, and I presume that what you are reading to me is what I did say, but I think when I was testifying and made that comment I was talking about the Seal Cone bottle.

I don't want to have the testimony stretched to include something I wasn't talking about. I was talking about a conical shaped Seal Cone paper bottle, as I recall.

Q. Now I am asking you whether you know of any
1934 instance of a filler in which the valve is opened by
contact with the bottle itself, using the American Can or the Pure-Pak or the Seal King cartons which we have here in evidence.

A. Now I don't recall that I have seen any machine in operation using the American Can bottle where the paper bottle actually opened the valve, but I believe the Hothersall patent discloses a mechanism whereby the top of the bottle of the American Can type is used to trip a little mechanism which rides a shoe up on a cam, and which in turn opens the bottle.

It is my recollection that is the way the Hothersall patent operates. In other words, the top of the bottle is actually used to ride the valve opening cam up onto a cam and open the valve. So if a bottle is not in the machine, the valve will not open.

But I didn't say now that I have seen that actually in operation. I say the patent discloses that.

Q. Now in the transcript at page 1610, in talking about American Can carton-making machines, you stated:

"Well, the American Can cartons are not made in
1935 the dairy. They are made at the paper companies or
the can companies' factories, and come to the dairy preformed.

"Q. Preformed?

"A. Preformed.

"Q. So they are in effect box manufacturers, in a sense, in that the carton is a small container?

"A. The carton is a complete container ready for use, and the same applies to the very similar type of carton made by the Sealright Company. I believe they are a subsidiary of Oswego Falls Corporation."

Now is it true, Mr. Deletzke, that for some years the Seal King carton manufactured by the Sealright Company, a sample of which is Plaintiff's Exhibit 55, is the carton similar in shape to the American Can carton and is the carton you were discussing at this point in the transcript?

A. When you say any particular carton, I was talking in just generalities as to my recollection of what was done. It is still my recollection that the Sealright carton is made by the Sealright people and the American Can carton is made by the American Can people as distinguished
1936 from the Ex-Cell-O carton which is sent out in blanks and made at the dairy plant.

Now there may be other ways in which they have done it, but I don't know of them.

Q. Do you recognize the machine shown in this photograph?

A. I can't see the carton well enough here.

Q. Have you ever seen that machine in a dairy plant?

A. Well, now, since I look at it here, it says "Seal King" on it so I presume it is a machine for filling the Sealright type of bottle.

1937 Q. Have you ever seen one of these machines operate in a plant?

A. Frankly, I can't say for sure that I have. I have been in so many dairy plants; I have seen so much machinery, I don't know whether I actually saw one of those or not.

Q. Have you any ideas as to what one of these machines would sell for?

A. That I can probably give you a reasonably good guess on. That is, everything on the picture?

Q. Yes.

A. Oh, I would say not less than twenty, twenty-five thousand dollars, something in that vicinity; maybe some less. It all depends on how fancy they are made. If machines—you can't tell from that. If they are made all nicely decorated with stainless steel, they will cost practically twice as much as if they are not nicely dressed.

In large machines of this type, you can almost figure the price per pound.

By Mr. McCanna: I offer in evidence in this case, this photograph identified by the witness, as Plaintiff's Exhibit 114.

1938 (Thereupon said photograph was marked Plaintiff's Exhibit No. 114 for identification.)

By the Witness:

A. (Continuing.) May I add that it hasn't at any time been my province to have anything to do with the price of machinery. It is only incidentally that I knew.

By Mr. McCanna:

Q. I only wanted it relatively, Mr. Deletzke.

A. I know that roughly you can just about estimate the price by the poundage of some of these heavier kind of equipment.

Q. Isn't it true, Mr. Deletzke, that you are only generally familiar with the filling of paper cartons and that most of your experience has been in connection with the filling of glass bottles?

A. Well—

Q. I mean your experience at Cherry-Burrell.

A. I would say my experience at Cherry-Burrell also involved a great deal of work for them in investigating paper bottles and paper bottle filling machines.

1939 Q. Well, then, isn't it a fact that—

A. (Continuing.) But they didn't, in my time, while I was with them, they did not make machines for filling certain kinds of paper bottles, but even before my time, they were selling the machines of the type they were then using, and, I understand are still used on filling the Seal Cone type of paper bottle, so, when you define paper bottles, you will have to distinguish, for example, between the Ex-Cell-O type of bottle which has a completely open top and is not rigid, from the more rigid type, such as the Seal Cone.

As long as I was with the company, the company made machines of the kind that could be used on a Seal Cone type of bottle.

1940 Q. What model was that?

A. I would say all of the machines they made could be used—the bottle filling machines they made, could be used on the Seal Cone type of paper bottles. When you put the right rubber gasket on you can have any type of bottle you want to use it with.

Q. And how would you describe—when you say all of their machines how would you describe the type of machines?

A. Well, the Cherry Burrell Corporation made what I have previously referred to as the gravity type hand fillers

and then, all the rest were of the rotary power type, while I was with them, and they were all either gravity or the gravity vacuum type and I believe when I first came with them, they were making a strictly vacuum machine, but, as I recall, that was just on the way out at the time I came to them.

Q. Let's see, you left them in 1952, was it?

A. I left them in 1952 and came with them in 1936.

Q. While you were employed by Cherry Burrell, wasn't that corporation aware of the pioneering effort of the Mojonnier-Dawson Company in introducing fillers for paper milk cartons to the small dairies?

A. Yes, I would presume that they were well
1941 aware of the activitiy of anyone who had anything to do whatsoever with the manufacturing and sale of dairy machinees.

They would probably be one of the first to learn and I think they were well aware of the activities of the Mojonnier-Dawson Company, and all other concerns who were making machines for filling paper bottles, as were, we will say, all the other major manufacturers of dairy machinery, and I believe they must have obviously reached the conclusion that they didn't want to get into that field at that time because they did not get into it. If they had wanted to, I presume they could have very easily gotten into it.

Q. But they did go into that field, didn't they, and in the fall of 1954 at the dairy show in Atlantic City, didn't they show for the first time or offer for the first time, to the trade, a filling machine especially designed for filling milk into paper cartons for small dairies?

A. Well, as you just mentioned before, I left the company in 1952. ~~That was two years~~—a little more than two years prior to that show. I left in the spring of
1952 and the show is usually in October of the year
1942 and it so happens that the dairy industry's exposition at Atlantic City in 1954 was the first one I hadn't attended in about eighteen years, I think.

1943 Q. Do you recognize this brochure which I hand you, entitled:

"New Milwaukee paper bottle filler by Cherry-Burrell" and bearing the date, January, 1955?

A. I honestly can answer you that I do not recognize it, never having seen it before.

Q. Didn't you see the machine they had at the October show in Atlantic City in 1954?

A. I just got through saying that I wasn't down there.

Q. Oh, pardon me. You have never seen this Cherry-Burrell machine for filling paper cartons, is that correct?

A. Didn't they have a machine on the floor in 1952? I am not sure.

Q. I am asking you—

A. Well, I can't recall. I don't recall ever having—now, I don't recall having seen that. I believe I saw pictures of that machine in the trade journals.

Q. Would you recognize this machine as being of any particular principle of operation?

A. Well, that I should be able to answer, if there 1944 is enough disclosure here.

Well, just looking at the illustration on the front cover, it would be my offhand guess that that is a measuring type of machine, because they have the large devices extending above the bowl and below the bowl and I presume that is what it is for, though, I have no way of knowing. It is just a guess.

Q. And by "measuring type," you mean using a measuring pot?

A. Comparable, we will say—an arrangement comparable to the disclosure in the Hothersall American Can Company patent, and I believe the way this looks to me, this looks like it may be an American Can bottle under the filler here.

It is altogether possible that Cherry-Burrell made fillers for the American Can Company. They make them for lots of companies.

Q. And you notice at the top on this title:

"Milwaukee paper bottle filler," isn't that term "paper bottle" a sort of heritage of the long experience of Cherry-Burrell in the filling of glass bottles and their continuing use of the term "bottle" instead of "cartons"?

1945 A. Oh, I think that is probably an advertising man's idea as to what would be a catchy phrase to use because I know how the advertising departments operate in these concerns. I wouldn't say that is any carryover, "bottles," or "cartons."

Q. Well, isn't it a fact that in this dairy industry there is sort of a rather heavy controversy between glass bottles and paper cartons, so far as everybody is concerned? You

wouldn't find anybody in American Can calling his container a paper bottle, would you?

A. I think the controversy is between the manufacturers of glass bottles and the manufacturers of paper cartons. There is where the argument is. I don't believe the industry—the people who use them care one bit whether you call it a bottle, a paper carton, or a box. It is the manufacturers who push their own line of goods who make a point of those things.

I believe you will find—my recollection is when I made an extensive search of the paper milk bottles and receptacles and stuff like that, some patents are entitled "cartons," and some are entitled "bottles," so you will even find
1946 the inventors, who have no row to hoe particularly as to what name they use, some of them calling them "bottles," and some of them calling them "cartons," and some of them calling them "receptacles."

1947 By Mr. McCanna: I would like to offer in evidence this brochure by Cherry Burrell, as Plaintiff's Exhibit 115.

By Mr. Clement: If your Honor please, I think I will object on the grounds of irrelevancy and immateriality. I don't believe the witness identified this machine.

By Mr. McCanna: He has, I believe, your Honor, stated that he recognized the principle of operation as shown in the machine and—

By the Witness: I said, "I guess." I said I had no way of knowing because I can't see what is on the inside of the machine. It is just an outside picture.

By the Court: What difference does it make? He did say it was a measuring type machine; isn't that what he said?

By Mr. McCanna: It had a measuring type pot.

By the Court: What difference does it make? What difference does it make?

By Mr. McCanna: Well, we have reasons for liking to have this into the record.

By the Court: The objection is sustained. What?

1948 By Mr. McCanna: We would like to have it in the record.

By the Court: I see that but I don't see any reason for it. The objection is sustained.

By Mr. McCanna:

Q. Mr. Deletzke, when did you first learn of the Electromatic filler made by Mojonnier-Dawson?

A. When I first learned of it?

Q. Yes.

A. Well, I will say I knew very little about it, I believe, until relatively recently. I had heard about it and may have seen them at exhibits if they exhibited them, but I don't recall ever having gone over the machine in detail at any time prior to this relatively recent past when I have been involved in this matter.

Q. Would you say that to the best of your knowledge the Mojonnier-Dawson Electromatic was the first available on the market for filling paper—for filling milk into paper cartons, suitable for the needs of the small dairy in so far as you know?

A. Now, when you say "into paper cartons," I pointed out before that I consider the Seal Cone bottle as a paper carton. It is sold as that and it has been for the last—

prior to my getting into the dairy industry, and, as
1949 such, I would say, if you consider a Seal Cone a paper bottle or a paper carton, then, certainly it was not, because you could use any one of the hand type fillers manufactured by Cherry Burrell, Creamery Package and a number of other people to fill that type of bottle.

Q. Had you ever seen those machines used commercially in small dairies for filling Seal Cone cartons?

A. I don't recall that I did because the paper bottles were so much more expensive to use than glass that the small dairies didn't go in for paper bottles. I think that was one of the—so far as I know, it still is one of the objections to paper cartons, that they are so much more expensive. They cost about, as I recall, a couple of cents apiece, while a glass bottle will cost about a nickel and will make 35 to 50 trips under normal use, and therefore, the paper bottle is so much more expensive that the small dairy doesn't go in for it unless they have to.

Q. I am talking, at the moment, about small dairies that have a run from 200 quarts to a thousand quarts per day.

A. Yes.

Q. And the kind of a filling machine that would
1950 serve the needs of that type of a dairy.

A. In filling what kind of cartons, now?

Q. Paper cartons.

A. Any paper cartons, again?

1951 Q. Yes.

A. Then again, they might use a conventional

gravity filler on a Seal Cone carton. I am taking that position because I know that the Seal Cone carton was on the market. Cherry-Burrell Corporation used to sell them and they used to be used on their gravity machines and their gravity machines could be used to supply the needs of any one of the dairies from the smallest to the largest in the country, so, if you want to fill glass bottles or Seal Cone bottles—

Q. I am not asking you about that. I am asking you whether you had known of any case or had seen any actual cases of commercial filling machines in the small dairies of the capacity that I am now mentioning.

A. No, I don't recall that I saw any small dairies using paper bottles. The only paper bottles used that I have seen, we will say, were either large dairies or large machines, or using the gravity filler for filling small quantities of product into bottles like the Seal Cone bottle. They were usually special price products, products that carry the cost of the paper bottle.

1952 Q. Now, Mr. Deletzke, will you please refer to the Purvis patent, 517,127.

A. I have it.

Q. Is there a constant level of liquid maintained in any part of the Purvis device?

A. No. I don't believe that is maintained. It is just an oiler. As the oil is used, the level will drop down, proportionate to the use.

Q. Is there a constant hydrostatic head of liquid maintained in any part of the Purvis device?

A. If you don't maintain a level, you quite normally would not have a constant hydrostatic head. Therefore, it would not.

Q. Does the amount of oil which flows from the reservoir A to the chamber B depend upon the length of time the solenoid is energized?

A. From A into B?

Q. Yes. Does that depend upon the length of time the solenoid is energized?

A. Well, if I am not mistaken, there is nothing between the chambers A and B to control the flow at all, is there? There is not, that I can see. The valve is down below.

1953 Q. Well, I am talking about flow, now. The flow has to go through some passage?

A. Well, if the valve is closed, there is no flow any place. It is all stationary.

Q. My question is directed mainly to the length of time. Does the amount of oil which flows from the reservoir A to the chamber B depend upon the length of time the solenoid is energized?

A. Well, as I interpret the drawings—

Q. I believe that could be answered "yes" or "no."

A. But the solenoid has nothing to do with the passage from A into B excepting incidentally as you open the valve C and the liquid flows from A to B out of the spigot.

Q. Well, that answers the question, I believe.

Now, does the amount of oil which flows from chamber B to the part to be oiled depend upon the length of time the solenoid is energized?

A. Well, certainly. I mean, it opens the valve and the length of time the valve is opened, determines at least to some extent, the amount of liquid that would flow through the open valve.

1954 Q. That is your best analysis, is that it?

A. Well, if I understood your question correctly. I want to be sure that I understand your question.

Q. I will put the question again: Does the amount of oil which flows from the chamber B to the part to be oiled depend upon the length of time the solenoid is energized?

A. I say it depends partially. Now obviously you say "the part to be oiled."

That part to be oiled may be close to this machine and it may be a long ways away and if it is a long ways away, the friction or resistance that might be built up in the discharge line, may keep the liquid from flowing through there rapidly.

Q. Well, disregarding that length, or distance between the chamber B and the part to be oiled; considering just the flow from the chamber B to its outlet, wherever the lead may go to.

A. Yes.

Q. Does that discharge depend upon the length of time the solenoid is energized?

A. Now, I—looking carefully at Figure 4, I would like to give you the answer that you are trying to get, but I want to be sure that we are both talking about the

1955 same thing. Will you refer to Figure 4 and then tell me the particular flow about which you are talking?

I don't like to answer a hypothetical question that I don't understand. Now, Figure 4 shows, as I understand it, Figure 4 shows the valve F at the base of the valve F',

which extends up to the solenoid and is held in sealed position by the spring. the two solenoid valves.

Now, when the solenoid is energized, the valve drops down and the oil can flow down along the valve stem, past the valve, out through the discharge identified as C^2.

Q. Yes, and all of the oil that is in the chamber B can flow out, and does the amount of that oil that flows out, depend upon the length of time the solenoid is energized? It just flows out, doesn't it, regardless of the energization of the solenoid?

A. How does it get into the chamber B?

Q. Well, I am asking a definite question.

A. Looking at the chamber B, it seems to be sealed off from the chamber A, the little vent pipe I seems to extend up completely through the chamber A and the oil
1956 comes out of A, through the pipe C^1 down against the valve.

Now, when the valve is open, I presume the oil can start running down the pipe C^2 and back into the chamber B but when the valve will close, whatever is in the pipe C^2, continues to run down and what is backed up into chamber B, will drain out and fall down into the pipe C^2. That is the way it apparently operates, so far as I can judge from the large drawing Figure 4.

Q. You haven't said anything yet as to whether that flow depends upon the length of time that the solenoid is either energized or deenergized.

A. Well, you asked me a question before, whether the solenoid had anything to do with the flow of oil from A into B.

1957 Q. No. This question is restricted to the length of time that the solenoid—

A. I know what you are after. I want to tie them together. I don't want to answer it half and half. Let us talk about one operation and then I will answer and I will tell you my whole impression of the operation.

By Mr. Clement: Your Honor, I think that speaks for itself in the specifications, as to how it operates. I think you can save a lot of time if you can refer to page 2 of the patent. There is a thorough description of what is indicated. I think the question that has been asked can be answered by looking at it.

By Mr. McCanna: I think the witness could answer it quickly, too. That is what I am examining him on. I

would like to get his statement whether the answer is "yes" or "no."

By the Court: Go ahead.

By Mr. McCanna: And I am not getting the an-
1958 swer and that is the reason why I pursued it.

By the Court: I said, go ahead.

By the Witness:

A. It states here:

"The operation of the device is as follows: It is obvious that when in normal condition the oil reservoir is closed, the valve F seating upon the lower end of the tube E, and being held firmly in position by the spring F^3. In this position the armature of the valve is disconnected from the electromagnets, and the electric circuit is broken. Whenever it is wished to make the oil feed to the parts to be lubricated, by means of a push button or other means, the electric circuit is closed, whereupon the electro-magnet attracts the armature of the valve and pulls it down thereagainst. In so doing the valve F is unseated from the
lower end of the tube E, and seated upon the upper
1959 end of the passage C^2. By this change of position, oil is admitted into the feed chamber through the tube E, until the oil has risen to the lower end of the air tube I and sealed it, the sealing of said air tube evidently stopping the further ingress of oil into the feed chamber."

By Mr. McCanna:

Q. And then the description goes on to say that:

"The action of filling the feed chamber as desired, takes place rapidly, while the electrical circuit is closed."

Is that correct?

A. Just a minute. Yes. That is, in substance, the wording used here.

1960 Q. Now does the amount of liquid which is dispensed from the chamber B depend upon the size of the valve opening into the passage C^2?

A. No. I don't presume so. I imagine they have sufficient capacity to let—it is based upon the general needs of the machine.

Q. Would you say that it is proper to say that the amount of oil that flows to the part to be oiled during each cycle of operations was a mechanically or physically measured volume?

A. Yes. That is intended to be a measured volume there.

Q. And in this device, the volume is not controlled by a timed orifice flow in the sense of the Mojonnier patent, is it?

A. Well, when you say "in the sense of the Mojonnier patent," they open the valve for a given period of time and the flow into the chamber B will only be stopped by some means besides the valve in the event the level of liquid reaches the vent tube I. If the valve doesn't open that long and the level of liquid does not reach the vent tube I, then it is controlled entirely by the solenoid actuated valve.

Q. Well, now, turning your attention to the ac-
1961 cused machine, Plaintiff's Exhibit 40, would it be reasonable to say that in this machine, upon deenergization of the solenoid, the valve is self retracted to normal position, shutting off the flow of fluid from the fluid supply container?

A. Could you read that to me carefully?

(Whereupon the question was read as above recorded.)

By the Witness: You say "self retracted"?

By Mr. McCanna:

Q. Yes.

A. And when you refer to "valve", do you refer to it in the same sense, with the same meaning of the valve as used in the Mojonnier patent or are you using it in a general way, now?

Q. Well, I am using it in a general descriptive way.

A. Well, I think it may be best to answer it in this way: In the Plaintiff's Exhibit 40, the valve does not retract itself to a closed position. It is forced back by the action of the tension spring through the linkage used in the first place to open the valve. The valve does not close itself.

Q. Oh, yes. In the Purvis structure, that is, shown in the Purvis patent—

1962 A. Yes.

Q. (Continuing.) —would it be proper to say that the valve is self retracted to normal position when the current to the solenoid is turned off?

A. I would say that the spring, the spring returns the valve element to a sealed position. The magnets are used to open the valve or to push the valve element down. The spring pushes it back up.

Q. I call your attention to page 2 of the Purvis patent and ask you to please read lines 38 to 45.

A. 38, starting with "Upon"?

Q. "Upon."

A. (Reading.)

"Upon breaking the electric circuit again, the valve is self retracted to normal position, shutting off the passage of oil from the oil reservoir into the feed chamber."

Q. Continue to 45, please.

A. (Reading.)

"* * * to discharge to the parts to be lubricated."

Do you want me to go further?

Q. I don't believe you read the whole passage 1963 there. I think you skipped some.

A. I will start again:

"Upon breaking the electric circuit again, the valve is self retracted to normal position, shutting off the passage of oil from the oil reservoir into the feed chamber, and opening the passage in the supporting stem, allowing the oil which has accumulated in the feed chamber to discharge to the parts to be lubricated."

1964 Q. Yes. Now, does the clock shown in Figure 6 of the Purvis patent control the duration of flow of oil from the chamber B to the part to be oiled?

A. Does the clock control there?

Q. Yes.

A. No. The clock is used to control the solenoids.

Q. Will you please refer to the Beyer patent, 668,303.

A. Yes, I have it.

Q. Does the amount of the liquid which flows from tank A to each bottle G depend upon the hydrostatic head of the liquid?

A. That will all depend on how long you have the valve open. If you have the valve open for a period of less than required to fill the bottle, then the hydrostatic head, the hydrostatic head in the Beyer patent will have a very definite effect on the speed of flow through the valve. If you have the valve—

Q. I am talking only about the amount of liquid which flows from the tank to each bottle.

A. The answer will be precisely the same. It depends on how long you have the valve open as to how much 1965 liquid will run through an open valve.

The hydrostatic head has a very definite effect on

the amount of flow through the valve. That is the principle of measuring flow.

Q. Isn't it a fact that in this construction the flow and the amount depends on the size of the bottle and it flows until the bottle is filled?

A. That is why I asked you whether you were going to specify the amount of time. If you add that to it—

Q. I am not talking about time. I am talking about the amount of liquid. Now, I will reread the question:

Does the amount of liquid which flows from tank A to each bottle G depend upon the hydrostatic head of the liquid?

A. I cannot answer that question unless you are going to tell me how long you are going to have the valve open. I have no way of determining or even guessing how much liquid will flow into a valve or into the bottle. You may have the valve open one minute and you may have the valve open ten minutes.

1966 Q. Well, I am talking about the normal operation of this filling machine.

A. The normal operation of that filling machine, and assuming that they have illustrated there a glass bottle, it will flow until the bottle is full, presuming there is enough liquid in the tank.

Q. Yes. And does this amount of liquid which flows from the chamber or tank A depend upon the size of the valve opening or orifice in the bottom of the tank?

A. In each one of these machines the size of the orifice, the length of time it is open, the hydrostatic head are all critical factors in the design.

What you are leaving out of each question is the time of opening. If you add to each question—

Q. I am confining my question to the amount of liquid.

A. Then I can't answer it again because I have no way of knowing.

Q. All right. I just want your opinion.

Now does the amount of liquid which flows from 1967 the tank A to each bottle G depend upon the length of time the valve is held open?

A. It depends upon the length of time and all the other factors, friction, size of valve orifice.

Q. And the size of the bottle then is not the controlling factor?

A. It is if you fill it until it is full.

Q. I am talking about a normal operation, filling operation in a commercial operation.

A. In a glass bottle?

Q. Yes.

A. In a normal filling operation the glass bottle is filled until it is full but—

Q. Yes. Now, is there a timer on the Beyer device?

A. An automatic timer?

Q. Any kind of a timer.

A. Well, nothing that you would refer to as a timer, no. It is a hand-operated machine.

Q. Is there a solenoid for operating the valve?

A. No, not to the best of my knowledge.

Q. Would a device constructed in accordance with the showing in the Beyer drawings be satisfactory for 1968 use in a dairy for filling milk into paper cartons?

A. Yes, it would. I would give precisely the same answer I have given all morning. If you are filling the Seal Cone type of bottle or any other kind of bottle made to look and operate like glass bottles, it would work. It is only the open type bottle where you need the different kind of valve.

Q. Is there any disclosure in the Beyer patent concerning that?

A. Concerning what now?

Q. Your last answer here.

A. The Beyer patent discloses what appears to me to be a glass bottle.

Q. It doesn't say anything about paper cartons.

A. Well, I think in 1901 very few people were thinking about paper cartons.

Q. Would it be satisfactory for the accurate repetitive production filling of aerosol containers by the cold fill process to use this Beyer construction, that is, the construction shown in the Beyer patent?

A. What was that—what process?

(Whereupon the question was read as above re-
1969 corded.

By the Witness:

A. I will have to be frank to admit my knowledge, the knowledge I have about filling aerosol bombs, is what I gained sitting here in court recently and listening to Mr. Fishleigh's testimony. I know nothing about filling aerosol bombs.

1970 Q. Now will you please refer to the Newman patent No. 711,069?

A. I have it.

Q. Is there a constant level of liquid maintained in any part of the Newman device?

A. I don't believe so.

Q. Is there a constant hydrostatic head of liquid maintained in any part of the Newman device?

A. That I couldn't—

Your first question was whether there was a constant level, was that it?

Q. Yes.

A. I said I don't think so. Now whether there is a constant hydrostatic head, that I couldn't answer easily because it all depends on how you have the supply and various supply tanks tied together.

Q. I mean as shown in this patent.

A. As far as I can see here, there was no effort made to—let me see—I don't believe so.

Q. Now in this Newman construction, does the size of the opening through the faucet 11 remain constant throughout the time that the liquid is flowing?

A. My best recollection is that with respect to the Newman patent, I testified on direct only as to the 1971 timing mechanism, but I will try to answer your question.

I can't find the cam that actuates the valve. If you could point that out to me, I could probably answer your question.

Q. I believe it is No. 28.

A. No. 28? Well, apparently, if the valve is opened by use of the rack and gear, then whether you would say whether it is open all the while it is closing—the period of time that the valve is being opened, obviously there will be a throttling effect. During the period of time the valve is being closed, there will be a throttling effect.

Q. Doesn't that cam have a very definite shape showing a very slow opening and a rapid closing?

A. Well, I was looking at the element—if that is the way it works, it probably depends on the speed with which the cam follower and the cam have their relative motion. Being a spring loaded device, I would imagine it snaps open reasonably quick and snaps shut reasonably quick, but I wouldn't know because I don't recall having gone into that in this patent right now. I think I looked primarily at the patent because it showed a timing device.

1972 Q. Does the Newman patent disclose means for varying the amount of liquid discharged during each cycle of operation?

A. You mean to be able to set for different cycles or during each cycle—you mean does each cycle have a different amount or—?

Q. No, does it disclose means for varying the amount of liquid discharged during each cycle? I think you understand that.

A. Frankly, I don't recall whether it does or not.

Q. Isn't it a fact that it has a fixed cam pattern?

A. I presume that, as in many machines, you merely shift the cam, but I don't know if that is contemplated here or not. If you don't move this cam and it is actuated by this cam, and all the teeth are alike, then of course you couldn't change it.

Q. Now would the device just as shown in the Newman drawings and described in the Newman specification be satisfactory for accurate repetitive production filling of milk into paper cartons in a dairy?

A. Well, to answer your question very simply, I don't believe they would ever put a clock mechanism like that into a dairy where you have a lot of moisture. With that, I think I can answer your question that you wouldn't
1973 use that type of mechanism in any dairy.

1974 Q. Now, referring, please, to the LaPorte patent, number 1,666,607, does the amount of liquid which flows from the tank 1 to each bottle depend upon the hydrostatic head of the liquid?

A. Presuming again that it is open long enough to let the milk run out, it will continue to run until the measuring cup is empty.

Q. You mean the milk will run—

A. Into the bottle.

Q. Out of the measuring cup 10?

A. As shown in Figure 2, the milk will run out of the measuring cup 10 into the bottle below the filling orifices 23 until the cup is empty, if the bottle is there that long.

Q. Now does the amount of liquid which flows from the tank 1 to each bottle depend upon the size of the valve opening or orifice?

A. From the tank 1 into each bottle? Well, now, it doesn't flow directly from tank 1 to any of the bottles.

Q. Then let's say from the measuring cup 10.

A. Does the amount—is the amount controlled by the orifices?

Q. Does that amount which flows depend upon the
1975 size of the valve opening or orifice?

A. It will depend upon the size of the orifice and the time. The amount that flows through an orifice obviously always depends on the size of the orifice.

Q. In this particular construction, isn't it a fact that the amount which flows depends upon the capacity of that measuring cup 10?

A. It depends upon that too. It depends on half a dozen other factors too.

Q. What other factor would vary the amount of liquid which flows from the measuring cup 10 into the bottle?

A. The time that the valve is opened. That is one of the most important things. The mere fact you put a glass bottle below that doesn't mean you have to hold it open until the bottle is full.

Q. In the normal operation of a filling machine, such as shown in the LaPorte patent, would there be any variation of that time?

A. Filling the same size bottles?

Q. Yes.

A. With the same kind of material?

Q. Yes. Wouldn't the measuring cup be lifted up
1976 and then—well, you tell me what would happen?

A. Well, during the normal operation of the machine, using a glass bottle, and presuming you are filling with what we commonly refer to as fresh milk, the bottle would be lifted against the end of the dispensing valve until the spring 17 is compressed in the manner shown in Figure 2. During that period part of the tubular valve stem rises and lifts the measuring cup 10 above the level of the liquid in the tank 1. As soon as the liquid is high enough to reach the ports 21, the milk starts running down through the ports through the hollow valve stem and out of the orifices 23 into the empty milk bottle.

Q. Until it is all drained out of the cup 10?

A. It all depends there now—normally certainly you want to fill the bottles so you leave it open until it is full, but you would very likely not use a measuring cup on a glass bottle because the practice is to fill the bottle up to capacity. The housewives look to see if the bottle is full, and normally the bottles are filled up to the point where they understand they are supposed to be filled.

1977 Q. And that is determined by the content or capacity of that measuring cup 10?

A. That is right. If you use the measuring cup, it has to be balanced very accurately against the size of the bottle you want to fill, so that you don't have some bottles with air space at the top.

Q. Yes. Is there a timer in this LaPorte device?

A. No mechanical timer. There is a device for controlling the raising and lowering of the bottles by hand.

Q. Is there a solenoid for operating the valve?

A. No, sir.

Q. Would a device constructed in accordance with the showing in the LaPorte drawings be satisfactory for use in a dairy for filling milk into paper cartons?

A. Yes, it would, accepting the Seal Cone paper carton as a paper carton. It would not operate on the Ex Cell-O type of open package, where the package can't be used to apply pressure. But if you have any paper bottle that can apply vertical pressure—and I have seen many models of different paper bottles that can be used for applying vertical pressure—then you could use that filler for filling paper cartons.

Q. And you would fill the amount that was measured out in that measuring cup?

A. That is right, just like you would fill a glass bottle. Just substitute them.

Q. You are now talking about the Seal Cone bottle?

A. That general type, the paper type of container that can be used to apply vertical pressure.

Q. Are there any other paper cartons on the market now of that type?

A. Limiting it to what I know about it, all I know of is the Seal Cone. I don't know of others commercially. There may be, I don't know.

Q. Would you know whether this LaPorte construction would be satisfactory for use in aerosol? That is in the filling of aerosols?

A. I prefer not to testify about what you do with aerosols because I don't know a great deal about that—very little, if anything.

Q. Now referring to the Winton patent, No. 2,030,951, does the amount of liquid which flows from the tank S to each bottle R depend upon the hydrostatic head of the liquid?

A. There again you are going to assume the bottle—now in this particular case, the bottle is not sealed on the machine and the flow is determined by time

as well as capacity of the measuring cup. So the amount of liquid which will flow out of that valve in a given period of time is determined by the amount, the length of time that the valve is open, and by the head of liquid in the measuring cup.

Q. Isn't it a fact that that measuring cup, just as in the previous patent, is designed to hold a definite quantity of milk?

A. That is correct, but that is the not the question you asked me.

Q. Then I will repeat, does the amount of liquid which flows from the tank 8 to each bottle R depend upon the hydrostatic head of the liquid?

A. Well, what liquid are you talking about?

Q. The milk.

A. In the tank 8?

Q. Well, it has to come first from the tank 8.

A. I mean, I can't answer your question because there is no milk that flows from the tank 8 into the bottles R directly.

Q. Then how does it flow?

A. The milk flows out of the tank 8 into the measuring receptacles 35. Then the measuring receptacles 35
1981 are raised, as illustrated in Figure 3, and when they are in that position the milk in tank 8 has absolutely no more effect on the valve, the dispensing valve 31, or the amount that flows into the bottle. It may as well be completely out of the machine.

When the filling cup 35 is in that elevated position and the valve 31 is open, the speed with which the liquid will flow out of that valve 31 is determined by the size of the valve opening, the friction to the passage of liquid, and the pressure of the liquid above the valve.

Q. You still haven't answered my question, Mr. Deletzke. I am asking whether the amount of liquid then which flows, we will say, from the measuring cup into the container, depends upon the hydrostatic head of the liquid.

A. It depends to some extent upon the hydrostatic head of the liquid in the cup 35 because that valve 31 is only open for a given period of time. It is not open for an indefinite period or it is not open until the bottle is necessarily full because the bottle does not touch the valves in the Winton machine, and the valves are opened by the cam
1982 37 for a given period and then closed.

Therefore the amount of liquid that flows through

the valve, the dispensing valve mechanism, is determined by the size of the valve, the pressure of the liquid behind the valve, and the friction to flow. It is not determined by any one thing.

1983 Q. Isn't it a fact that the size of that measuring pot or cup 35 is the factor which determines the amount of the milk or fluid which is delivered or flows out?

A. Only if you leave it open until it is empty.

Q. Well, in the normal operation of this machine—

A. Now I can answer that question if you add that to it. You obviously would leave it open until it is empty during the normal operation of the machine. That is the purpose of it. But that isn't what you asked me.

Q. All right. Now, when that measuring pot is full, the level is at the top, and as the milk drains out that level recedes to the bottom?

A. That is right.

Q. To zero, when all the milk flows out. I am asking whether the amount of liquid depends upon a particular hydrostatic head, the amount of liquid flowing out.

A. Until it is empty? May I add that to it?

Q. No, I am talking about amount now.

A. I can't answer an incomplete operation. You will either have to empty it—I can't tell you how much

1984 will flow out of there if you don't set a period of time because this is a time operation machine. I couldn't tell you how much will flow out of there if you don't put a period of time on it some place. If you leave it open until it is empty, then obviously the size of the cup will—

By Mr. Clement: If I may make a suggestion, I think it might save a lot of time. If we discuss these devices under the normal operation, I think we can cut this in half. I think it would help both Mr. McCanna and the witness.

By Mr. McCanna: I am talking about the normal operation, I believe.

By Mr. Clement: I think if you make it clear that we are, then the answers can be much shorter.

By Mr. McCanna: Yes.

By Mr. McCanna:

Q. Mr. Deletzke, is there a timer on the Winton device, shown in the Winton patent?

A. The Winton device describes that you have a motor turning the shaft 7, or a source of power running the

1985 shaft 7, and that shaft 7 carries a cam 37 and a cam

follower 38, and that the valves are opened and closed in timed order.

Q. Is there a solenoid for operating the valves?

A. No.

Q. Now, if the Winton machine were run at half speed, would there be any difference in the amount of milk filled into each bottle R?

A. During just normal operation again, and you fill the cup completely and then let it empty?

Q. Yes.

A. Then the amount of milk that will run out will be the total amount that is in the cup and in the valve, if you have it opened until it is empty.

Q. And I am talking about operating it at half of what is the normal.

A. I think that is right If you have it set to fill a certain quantity normally, if you run it half as slow and leave it open, the same amount will still come out.

Q. Yes.

Now will you please refer to the Fagan-Mojonnier patent 2,147,366.

1986 A. I have it.

Q. Have you ever operated one of the vacuum fillers of the type shown in this patent?

A. No, sir, I have never operated one of those machines. I have watched them operate, watched them being taken apart, cleaned and put together, but I have never run one.

Q. Where did you watch the operation?

A. Well, at a number of places. My best recollection is that not too long after I came with Cherry-Burrell, I was taken to a place here in Chicago by one of the salesmen of their Chicago office, as I recall, to watch the operation. It may have been—well, I couldn't say any more just which one of these dairies.

I think I saw another one just about the same time at, well, within 40 or 50 miles of there, a little Cherry-Burrell factory at Little Falls.

I mentioned before Cherry-Burrell were still interested in the vacuum filling machine about the time I came to work for them. That is about the time that I recall I was taken out and shown these machines.

Q. Is that where you obtained the impression that 1987 these machines operated at a capacity of 75 quarts?

A. No. I gained that impression by looking at the number of lifters shown on the machine and in Figure 6

of the drawings, and merely multiplying that by the factor of 4 or 5 or 6, realizing that that is roughly the speed the gravity machines operate, I believe the Mojonnier Brothers filling machine operates just as rapidly as the gravity machine.

1988 Q. Are you familiar with the model 90 Mojonnier Brothers vacuum machine?

A. I don't know any of the model numbers of any of their machines.

Q. You don't know that the model 90 is the popular machine, most generally used?

A. No, I don't.

Q. And you don't know the capacity of that machine at normal running?

A. I have no idea what model 90 is. I have no idea what the capacity is.

Q. Does the amount of liquid which flows from the tank E to each bottle M depend upon the hydrostatic head of the liquid?

A. From the tank E to each bottle M—I would say the level of the liquid in the tank E, and now you have a reverse operation since you are sucking the liquid up, has a very pronounced effect on the speed with which the liquid will flow, even more so than it would in a gravity filling machine, such as the Plaintiff's Exhibit 39, because the distance, when the filling operation is in process, the actual lift that must be accomplished by the vacuum is the distance between the top of the level of the liquid in

1989 the tank E and the bottom of the discharge nozzle in the mouth of the neck of the bottle.

I would guess that if those are quart bottles shown in Figure 2 of the Fagan patent that might be a distance of 6 or 7 inches. If you vary the level of the liquid in tank E by one inch, you would reduce by 16 per cent or so the amount of lift necessary to suck the liquid through the suction pipe.

When you have such a short distance as contrasted with Defendants' Exhibit 39, where you are working on a 12 or 13 inch hydrostatic head, one inch will make proportionally less difference—probably make half as much difference.

Q. Are you basing this information, these facts that you are giving here, these figures, on actual experience with the machine or what?

A. I am basing my opinion that I have given you on

what will be the effect of the gravity, and so on, in sucking liquid through a bent piece of tubing on what I generally know about hydraulics.

Q. Is that your best opinion as to the operation of this Fagan and Mojonnier machine shown in this patent?

A. That is my best opinion as to the operation?

1990 Q. Yes, with respect to this question I have just asked.

A. Whether the elevation would have anything to do?

Q. No. Does the amount of liquid which flows from tank E to each bottle depend upon the hydrostatic head of the liquid?

A. It depends again on no one thing. It depends on the hydrostatic head, the friction in the pipe, the amount of vacuum. If you make it flow very fast, then you introduce very high friction effects. It depends on the viscosity of the liquid. It depends on, well, probably at least a half a dozen factors. The importance of the various factors vary with different filling operations and the product that is being filled.

Q. Well, we assume that this is milk, and we are in a normal operation with quart bottles.

A. With milk, yes. Well, if you are trying to fill rapidly, then the friction, the aspect of friction always becomes important. If you are filling very slowly, the aspect of friction becomes less important, and then just the dead lift of the liquid from the elevation of the liquid in the

1991 tank E up to the bottom of the filling nozzle, because the filling nozzle works by syphon. You have one leg balanced off the other.

So you have a dead lift there, I would say, of probably 6 inches. Certainly if you have to lift it 6½ or 7 inches, you are going to have to work a little slower or either apply more vacuum to get the same speed of filling.

Q. Isn't it a fact, Mr. Deletzke,—

By the Court: We will recess at this time. Come in at 2:20, gentlemen. I have a Grand Jury at 2:00 o'clock.

(Whereupon a recess was taken in the above entitled cause until 2:20 o'clock p. m. of the same day, Monday, June 6, 1955.)

* * * * *

1999 By the Court: Proceed gentlemen.

NORMAN E. H. DELETZKE, called as a witness on behalf of the Defendants, having been previously duly sworn, was examined and testified further as follows:

Cross-Examination (Ctd.) by Mr. McCanna.

Q. Mr. Deletzke, I have a number of questions that I am going to give you in which I will mention paper cartons. I am confining those questions strictly to Pure-Pak, American Can and Seal King cartons. Those are the three cartons with which you are familiar.

Now referring to the Beyer patent, would a device constructed in accordance with the showing in the Beyer patent drawings be satisfactory for use in a dairy for filling into paper cartons, meaning the Pure-Pak, American Can and Seal King cartons?

I would like to have an answer yes or no.

A. They may use it on the American Can. I am quite sure you couldn't use it on the other two.

Q. Now I ask you the same question with relation to the LaPorte patent.

2000 A. There again you might use it on the American Can, but not on the other two I believe.

By Mr. Clement: I can't hear you, Mr. Deletzke.

By the Witness: I say I think you may be able to use the LaPorte patent on the American Can type of carton, but not on the Sealright or the Ex-Cell-O type of cartons.

By Mr. McCanna:

Q. Now with relation to the Fagan and Mojonnier patent.

A. There again you may be able to use it—well, I don't believe you could use anything excepting a bottle shaped like a glass bottle under the Fagan-Mojonnier filling head.

Q. You mean a glass bottle?

A. Or a paper one made like glass.

By the Court: Or stone or pottery, iron or brass?

By Mr. McCanna: Thank you, your Honor.

By Mr. McCanna:

Q. Now I refer you to the Larsen patent, 2,164,530—

By the Court: What is that?

2001 By Mr. McCanna: Larsen patent 2,164,530. I believe that is the next patent in chronology.

By Mr. McCanna:

Q. Does amount of liquid which flows from the reservoir 8 to each bottle depend upon the hydrostatic head of the liquid?

A. Not in normal operation.

Q. Does it depend upon the size of the valve opening or orifice?

A. Not in the normal operation.

Q. Does it depend upon the length of time the valves are held open?

A. The amount that flows, the length of time it is held open?

Q. Yes. The question is, does the amount of liquid which flows from the reservoir 8 to each bottle depend upon the length of time the valves are held open?

A. Not in the normal operation, but I should say that—

Q. That is all I want, your opinion.

A. Then I will have to retract that statement because I will have to tell you what I mean by operation.

2002 By Mr. McCanna: I move to strike out the balance of what was said there.

By the Court: No. No, you don't have any jury here. If he says something he shouldn't say, it won't contaminate me.

By Mr. McCanna: All right, your Honor.

By the Witness:

A. I do say the normal operation obviously contemplates a period of time for the filling of the bottle.

By Mr. McCanna:

Q. I am talking about the time the valves are held open.

A. The amount is determined by the size of the bottle during normal operation.

2003 Q. Yes. Now is there a timer on the Larsen device?

A. There is a variable speed drive which rotates the filling reservoir at a given number of rpm per minute.

Q. Does the time of that rotation determine the amount of liquid which flows from the reservoir into each bottle?

A. Normaily the size of the bottle is such that it is full just as it comes to the kick-off station.

Q. Yes. When the bottle is filled, that is the determination, is that correct?

A. The termination of the flow?

Q. Determination of the amount that is filled into the bottle.

A. That is right. When the bottle is full that is the end of the filling.

Q. Is there a solenoid for operating the valves?

A. No.

Q. Would a device constructed in accordance with the showing in the Larsen patent be satisfactory for use in a dairy for filling milk paper cartons, and here again I am restricting this to the three cartons.

A. It may work on the American Can type of carton, which has a round hole. It won't work on the Ex-
2004 Cell-O—or the Sealright, because that has a triangular hole, and it won't work on the Ex-Cell-O because it doesn't have a top when the carton is open.

Q. I refer you to the Lippold patent 2,171,757.

Does the amount of liquid which flows from the reservoir 6 to each bottle depend upon the hydrostatic head of the liquid?

A. In normal operation when you fill the bottle completely, it would not.

Q. Does the amount of liquid which flows from the reservoir 6 depend upon the size of the valve opening or the orifice?

A. The same answer applies there.

Q. Does it depend upon the length of time the valves are held open?

A. The amount that flows—

Q. The amount of liquid, yes.

A. The same answer. If the bottle is full, these factors don't apply.

Q. Is there a timer on the Lippold device?

A. No, sir, there is no timer.

Q. Is there a solenoid for operating the valves?

A. No.

Q. Would a device constructed in accordance with
2005 the showing in the Lippold drawings be satisfactory for use in a dairy for filling milk into paper cartons?

A. It wouldn't work on the Ex-Cell-O type or on the Sealright type. It may work on the American Can, or it would work on the Seal Cone and on the American Can probably.

Q. I refer you to the Hothersall patent 2,222,617.

By the Court: What is that?
By Mr. McCanna: Hothersall, 2,222,617.

By Mr. McCanna:

Q. In this patent does the amount of liquid which flows from the tank A to each can B depend upon the hydrostatic head of the liquid?
A. No, it depends on the—
Q. That is all.
A. (Continuing.) Depends on the quantity in the measuring compartment.
Q. Oh, yes. And does the amount of liquid which flows from the tank A to each can B depend upon the size of the valve opening or orifice?
A. Not in normal operation.
Q. Does it depend upon the length of time the valves are held open?
2006 A. No.
Q. What does it depend upon?
A. The amount of liquid in the measuring compartment.
Q. That is the measuring pot C?
A. C, yes.
Q. Now is there a solenoid for operating the valve?
A. No.
2007 Q. I refer you to the Thompson patent, number 1,381,442.
Is there a constant level of liquid maintained in any part of the Thompson patent?
By the Court: What is that number?
By Mr. McCanna: 1,381,442. That is a file reference.
By the Court: 1,381,442?
By Mr. McCanna: Yes, your Honor.
By Mr. Clement: Your Honor, the witness didn't testify to this patent. I don't see the need for cross-examination.
By the Court: It is the first time I have looked at it.
By Mr. McCanna: Well, it is set up as one of the patents relied upon.
By the Court: All right.
By the Witness: The question was whether there is a constant level? The purpose of the float valve is to maintain a level of liquid in the ice cream mix tank 1.

By Mr. McCanna:

Q. Does the Thompson patent contemplate that
2008 the amount of liquid that flows out of the reservoir 1

during each operation, will that be determined or controlled by the length of time the valve 4 is kept open?

A. To some extent, I believe.

Q. How is the amount determined or controlled in this patent?

A. It appears to me to be a hand-operated mechanism for feeding ice cream into a batch type ice cream freezer. The ice cream mix is supplied to the tank 1, and when the operator wants to fill the freezer, why he drains a quantity out of the valve 3.

Q. Is there a solenoid in the Thompson device?

A. Not that I know of.

Q. Is there a timer in the Thompson device?

A. No.

Q. Would the device shown in Thompson drawings be practical for use as a filling machine in a dairy for filling milk into paper cartons?

A. Yes, you could use it for that if you wanted to. It is just like opening a spigot and letting the liquid run out. I don't think anybody would, but you could if you wanted to.

Q. In your openion would the Thompson construc-
2009 tion be practical for use in commercial filling operations?

A. I don't think so.

Q. Now referring to the Jackson patent, number 1,531,007, is there a constant level of liquid maintained in any part of the Jackson device?

A. I don't believe so.

Q. Is there a constant hydrostatic head of liquid maintained in any part of the Jackson device?

A. No, I don't see any representation of liquid at all.

Q. Is there any sort of timer disclosed in the Jackson device?

A. Not in the general sense of the word timer, no.

2010 Q. Would a device constructed in accordance with the showing in the Jackson drawing be satisfactory for use in a filling machine in a dairy, filling milk into paper cartons?

A. I should think it would be.

Q. Have you ever seen a device of that construction used in a dairy?

A. No, I don't recall that I have ever seen anything like it.

Q. I refer you to the Searing patent, 1,613,248.

Which part of the Searing device holds the beverage to be dispensed?

A. If you want to use hot water, you would get it out of the left-hand spigot. If you wanted to use some other beverage, you would get it out of the right-hand spigot, very much like the coffee machine, depending on what you want, coffee or hot water. They have both.

Q. Well, so far as the coffee liquid is concerned, where is that, in what reservoir is that contained?

A. Assuming it is the coffee machine, it could be in the receptacle D. I don't think it would supply coffee through a float valve.

Q. Does that patent describe the receptacle D as 2011 holding the beverage? I refer you to page 1, line 41.

A. It does say that the beverage is in compartment D.

Q. Yes, and compartment D then is the dispensing compartment for the beverage?

A. For that particular beverage, yes.

Q. Is there a constant level of liquid maintained in the dispensing compartment D?

A. Not—no.

Q. Is there a constant hydrostatic head of liquid maintained in the dispensing compartment D?

A. No.

Q. Is there any sort of timer disclosed in the Searing patent?

A. No.

Q. Is there any sort of timed orifice flow of liquid disclosed, or suggested in the Searing patent?

A. The timed orifice flow when you open the spigot and hold it open for a while and close it, you have timed orifice flow.

Q. Does the float V or the level of the liquid in the compartment W have any effect upon the velocity or amount of liquid flowing through the dispensing 2012 faucet d^1 when it is opened?

A. No.

Q. Please read from the Searing specification beginning on page 1 at line 80, through page 2, line 4.

A. (Reading.)

"Hence, obviously, when the water level w, in the heating compartment A, falls below normal for any reason, as by evaporation or otherwise, thereby lowering the level of supply water in the tank T, the float v^2, will be correspond-

ingly lowered, and sufficiently so to raise the valve v, from its seat, and thereby admit water from the supply pipe t, to replenish the deficiency and restore normal water level in both the water heating compartment A, and its supply tank T; and this operation will repeat automatically upon occasion as long as heat is applied to the bottom of the container A.

"As a result of my invention all danger of overheating by reason of partial or total exhaustion of the liquid heating vehicle W, in the container A, is obviated which might otherwise happen as heretofore by reason of lack of
2013 attention which lack has in the past frequently been detrimental or disastrous to both apparatus and contents, and even to extraneous areas. In fact, and in other words, my combination with the heating vessel of automatic water feeds renders the apparatus practically fool proof and safe by effecting and maintaining a prescribed water level under all circumstances and conditions of use, so that even if the heating means be not turned off, for instance, at night, no damage can come from such or analogous carelessness.

"Furthermore, by thus automatically maintaining the prescribed level of liquid heat vehicle in the heater A, a safe normal temperature is imparted to the beverage B, in the dispensing compartment D."

2014 Q. Now does that explain what the float valve does and why a constant level of liquid is maintained in compartment W?

A. It explains one of the things that it does, certainly.

Q. Would a device constructed in accordance with the Searing drawings be practical for use as a filling machine in a dairy for filling milk into paper cartons? I mean, in practical commercial operation.

A. Commercially, you would have to be able to clean the machines and clean them easily and you don't have a lot of exposed threads and so on that might become contaminated.

For that reason, I doubt they would want to use a machine of this type with exposed threads and so on in a dairy. But, so far as filling is concerned, you have a constant level, a constant hydrostatic head and if you wish to fill milk out of the spigot immediately below the letter W, you could do so.

Q. I am referring to the beverage compartment D. Is there a constant level maintained in that?

A. No, no constant level.

2015 By Mr. Clement: Your Honor, he has already answered that question.

By Mr. McCanna: Well, he has more or less tried to deviate and I just want to make certain what we are talking about.

By the Court: He said you could take it out of the water container if you wanted to.

By Mr. McCanna: All right.

By Mr. McCanna:

Q. Please refer to the Ashkenaz patent, 2,254,833.

By the Court: What is it?

By Mr. McCanna: Ashkenaz, 2,354,833.

By Mr. Clement: 2,254,833.

By Mr. McCanna:

Q. 2,254,833.

Mr. Deletzke, is it your opinion that the fluid in the cup 75 in the Ashkenaz patent would be maintained at a preselected level, and I would like to have a yes or no answer on it.

A. Yes.

Q. All right. Would there be any variation in the level at all?

A. There may be a slight variation.

2016 Q. How much variation in level do you think there might be in a structure built in accordance with the Ashkenaz drawing and to a size corresponding to the photostat of drawing of the Ashkenaz patent which I have placed on the easel?

Would you care to examine that photostat drawing closely?

A. It is the same as the patent, isn't it?

Q. Yes, but we are talking about the size that is shown in this photostat.

A. My best way of judging that is, when I was a kid on the farm, we used to hold the chickens by putting the tin can in the flower saucer. It was very, very little; it seemed the same way.

Q. You are using some very vague terms here and I would like to have your best judgment and what you would—

A. Well, on that exact size (indicating)?

Q. Yes.

A. Just that size? I would say they probably would keep in there within a quarter of an inch, more or less.

2017 Q. All right. Is it your opinion that there would be a substantially constant hydrostatic head of the fluid maintained in the Ashkenaz cup 75?

A. In the Ashkenaz cup 75—constant hydrostatic head, between what?

Q. Well, I am—

By Mr. McCanna: Will the reporter please read the question?

(Whereupon the question was read as above recorded.)

By the Witness:

A. Yes.

By Mr. McCanna:

Q. What would the hydrostatic head be in Ashkenaz which would be effective to cause fluid to flow through the aperture 50 when the valve 61 is open?

A. I can't find aperture 50. Just a minute.

Q. I believe you will find it in Figure 6. There is the small aperture in the rubber valve seat. I don't think it is numbered on Figure 2.

A. In Figure 6 you couldn't tell what would be the hydrostatic head.

Q. Well, when that is in position in the assembly.

A. Yes.

2018 Q. In Figure 2.

A. What is the assembly, 47?

Yes, over here in Figure 2 there is an indication of the numeral 47 which is the large nut below the item—the element 50 in Figure 6.

The hydrostatic head effective in causing flow through the orifice is the depth of liquid from the orifice constriction to the surface of the liquid in a cup 75.

Q. Is it your opinion that when the Ashkenaz valve is opened there would be a uniform flow of fluid through the bore 74?

A. The bore 74? Let me find it.

A substantially constant flow, yes.

Q. Are you sure of that?

A. That is my opinion.

Q. Are you willing to stake your reputation as an engineer skilled in the dairy industry and well versed in the laws of hydraulics and fluid flow in that position?

A. I wouldn't say it unless I was willing to.

Q. Did you ever see a device constructed like the figures of the Ashkenaz patent?

A. I would say very close structure, similar struc-
2019 ture, reasonably close structure, the ordinary water fountain, a jug filled water fountain.

Q. Did you ever see a device constructed precisely like the Ashkenaz patent?

A. No, I had never seen a device according to the Ashkenaz patent.

Q. Would the level of the liquid in cup 75 be any different if the bottle 22 was completely filled than it would if the bottle 22 was almost empty?

A. If the bottle becomes empty, in that type of device, the feeding varies slightly from the type of feeding that takes place when the bottle is completely full.

Q. Would the liquid level in cup 75 be as uniform if the bottle 22 was completely filled as it would if the bottle 22 was almost completely empty?

A. Well, I think as you get down to the point to where the bottle was almost empty, you are getting down into the neck of the bottle, but the liquid may drop through because you will have enough air in the top so as not to hold the water back. It is a vacuum proposition.

Q. I didn't say empty. I said almost empty.

2020 A. Well, I said almost empty, too, down into the neck.

Q. All right. Would the device which is as shown in the Ashkenaz drawings be satisfactory for the accurate repetitive production filling of a free flowing fluid such as milk?

A. To fill milk by a device such as Ashkenaz? You wouldn't use a complicated device like that. It is too hard to clean.

Q. I refer you to the Bowman patent 2,462,019.

Is there a constant level of liquid maintained in the various fluid containers in the Bowman device?

A. To my recollection, the constant level is maintained in the one compartment.

Q. Well, I am asking about the fluid containers, individual.

A. There are four of them, as I recall. In three of them the levels drop while in the fourth, the level is maintained.

2021 Q. And which are these?

A. Well, the syrup compartments 50, 51 and 52, as the material is used, the level drops.

Q. Now is there a constant hydrostatic head of liquid maintained in the fluid containers in the Bowman device?

A. In those in which the level drops, you cannot have a constant hydrostatic head. In another one, you do.

Q. Is there a gravity flow of liquid in any of the liquid containers to and through the valves 60 and 70?

A. I don't believe so.

Q. Would the Bowman beverage dispenser as shown in the drawings of the Bowman patent be practical for use in a dairy for filling milk into paper cartons?

A. There again, I don't think they would use a machine like that in a dairy, for various reasons.

Q. Please refer to the Warren patent 2,515,363.

In the structure illustrated and described in the Warren patent, upon what does the volume of carbonated bev-
2022 erage dispense during each cycle of operation depend?

A. The period during which the valve is opened and the head of pressure behind the valve.

Q. What are you talking about now?

A. Well, when used for carbonated beverages, you have the hydrostatic head determined by the float valve 130 and then—plus the gas pressure maintained to prevent decarbonization in the tank 119.

Q. How much pressure is maintained in the chamber 119?

A. As I recall, it was three or four pounds. I am not sure.

Q. Approximately what hydrostatic head o liquid would there be in a commercial machine if built in accordance with the Warren drawings?

A. I wouldn't know how tall they would make it, but I can give you—the hydrostatic head varies approximately two pounds, or a pound for each two foot of distance, roughly a pound for each two foot of distance.

Q. And approximately how tall would that sort of machine be if we followed the Warren drawings?

A. It would be a guess on my part.

2023 Q. What is your guess?

A. Oh, I would say the compartment 119 is probably two or two and a half feet overall, something like that.

Q. And what would the overall machine be?

A. What overall machine? Over here, as shown in Figure 2?

Q. Yes.

A. Oh, I suppose it is about, perhaps the height of the coffee machine, the Melikian coffee machine, perhaps a little less. It looks to be that general type of machine.

Q. Now you have talked about the combined force acting to cause the liquid to flow when the faucet 31 is opened.

Would that force be equivalent to approximately what hydrostatic head of milk?

A. Well, I gave you the figure for water. Milk is very, very nearly the same as water so far as hydrostatic head is concerned.

Does that answer your question?

Q. Well, I would like to know in a matter of feet as to what that hydrostatic head would be.

2024 A. The total discharge pressure—I don't understand your question.

Q. Well, I will repeat the question this way: The total force acting to cause liquid to flow when the faucet 31 is open would be equivalent to approximately what hydrostatic head of milk?

A. The actual head of milk that would be in there plus—if there is three pounds of pressure that would be, roughly, six more feet of depth. Three pounds of pressure would be the equivalent of six feet of depth, so it would be whatever elevation you have in there plus approximately six more.

Q. Would such a pressure or hydrostatic head be satisfactory for use with a filler for filling milk?

A. Six feet?

Q. Well, whatever your opinion is. I am asking that.

A. Well, certainly.

Q. Now, does this Warren patent illustrate or describe the construction of any structure which does not have a pressure of at least three or four pounds above the liquid in the dispensing tank?

By Mr. Clement: Your Honor, the pressure doesn't come from the structure. It comes from what you put in 2025 the structure.

By Mr. McCanna: Well, that is involved in the description. I believe the witness can answer that.

By the Witness: Will you read the question, please?

(Whereupon the question was read as above recorded.)

By the Witness: Well, just as Warren describes, if it is filled with carbonated beverage, then you would have a pressure in that tank.

By Mr. McCanna:

Q. Now I refer you to the Melikian patent, number 2,682,984.

I refer you to a photostat enlargement of sheet 1 of the drawings of Melikian patent, which we are placing here on the easel, and I will ask the Reporter to please mark this as Plaintiff's Exhibit 115.

(Thereupon said document was marked Plaintiff's Exhibit No. 115 for identification.)

By Mr. McCanna:

Q. Will you please examine this photostat, and I am asking you what hydrostatic head would be effective to cause flow of cream when the valve 42 is opened if the commodity container was completely full?

A. The hydrostatic head effective at the orifice would be the difference in elevation in feet between the orifice opening and the surface of the fluid in the commodity container.

2027 Q. I am asking a specific question as to just what that hydrostatic head would be, the effect of the hydrostatic head.

A. The effect of the hydrostatic head would be to force the liquid through the orifice.

Q. No, what would be the effective hydrostatic head in figures?

A. Is this to scale?

Q. I would like to have you calculate that.

A. I have no ruler. I will assume that the orifice is the horizontal line immediately above the surface of the cup, and I will assume that the level of the liquid is immediately above the word "cream."

Q. That is with the container completely full?

A. That is what you said, isn't it?

Q. Yes.

A. Well, I can't measure straight up but it appears to be slightly over 5 inches. That would be 5/12 of a foot for your hydrostatic head, approximately. I can't measure it correctly because these aren't lined up.

Q. What head would be effective if the commodity container was almost empty?

A. Well, that would appear to be generally in the
2028 vicinity—the hydrostatic head would appear generally to be in the vicinity of 4/12 of a foot.

Q. The hydrostatic head when the container was full would be what percentage of the hydrostatic head when the container was almost empty?

A. Will you read that? You asked me before about effective hydrostatic head, and now you are asking about hydrostatic heads. Is there to be a difference?

Q. No. You have given us two figures, 5/12 of a foot with the commodity container completely full and 4/12 with it almost empty.

A. Yes.

Q. Now I want the percentage of the head when it was full with respect to when it was empty.

A. It would be the proportion of 5/12 to 4/12.

Q. Would such a variation in hydrostatic head cause any variation in the flow of a free flowing fluid through the valves 42?

A. It would probably have some effect, there being lots of other factors that affect the flow.

Q. Well, approximately how much greater in percentage would the flow be when the commodity container was full than it would be when the container was almost empty?

2029 A. Well, I watched the demonstration of the machine, and there seemed to be relatively small deviation in the actual filling of the two large receptacles. I presume that the actual difference in filling operation is not directly proportional to the hydrostatic head, but is also in proportion to the resistance to flow and various other factors that enter into it.

2030 Q. Now I asked you, Mr. Deletzke, a question that involved what percentage, approximately how much greater the percentage would be with the container full than with it almost empty.

Can you calculate what that might be?

A. I might be able to calculate it, but I say I would have to know what the effect of the orifice is, the effect of the resistance of flow through the tube, and all those other factors that you normally consider when you compute orifice flow. You don't just consider hydrostatic head.

By the Court: Why don't you ask him, if you want that figure, which I have had for five or ten minutes, why don't you ask him to disregard all the other elements?

By Mr. McCanna: All right.

By Mr. McCanna:

Q. Disregarding those other factors that you are talking about, what would that percentage be?

A. Well, there was a variation of—

Q. Do you wish to use a slide rule in calculating? Mr. Fishleigh has very kindly supplied us with one.

It involves calculation, I believe your Honor.

2031 A. Your velocity varies with the square root of 2gh plus your area. You have the square root of two times 32.2, as I recall, plus, rather, times 4/12 times 5/12.

Well, I shouldn't think it would make more than probably 10 or 12 per cent variation at the very outside. I haven't calculated that, but that is just an estimate.

Q. Would a 10 to 12 per cent variation in volume be satisfactory for a commercial filling machine?

A. No.

Q. That is for milk?

A. No.

Q. I refer you to the dispensing machine, Defendants' Exhibit 3. What hydrostatic head would be effective to cause flow of cream when the valve was opened if the commodity container was completely full?

A. Isn't that in substance the same as your exhibit over here?

Q. Yes, but I would like to have it in actual dimension, if you can give it, please?

A. The hydrostatic head—

2032 By the Court: Really, I don't see the necessity for this. There would be some difference just as sure as the world.

By Mr. McCanna: Your Honor, we would like to demonstrate to your Honor what that difference is and what it means.

By the Court: Oh, now, I know the hydrostatic head varies. I can see that.

By Mr. McCanna: All right, your Honor.

By the Court: I saw that the other day. I see it varies, and they put those smaller pipes up there to minimize that variation. But they don't get rid of it all. I know that. Anybody else will that studies it after you instruct them.

By Mr. McCanna: We will take that up later, your Honor.

By the Court: If you think it is necessary to the success

of your client to get that with respect to that machine, go ahead and get it. But I don't.

By Mr. McCanna: Well, your Honor, there
2033 has been some testimony in a demonstration here, and we propose to show to your Honor what we believe the facts are.

By the Court: Well, I know what the facts are. I had just a minimum of this stuff when I went to school, but a little bit of it comes back to me once in a while.

2034 By Mr. McCanna:

Q. Now I will call your attention to the Zsoldos patent 1,639,679.

By the Court: What was that one?

By Mr. McCanna: The Zsoldos patent, 1,639,679.

By the Court: Yes, I have it.

By Mr. McCanna:

Q. Is it your opinion that the structure disclosed in the drawings and described in the specification of the Zsoldos patent would operate satisfactorily to automatically compensate for the difference in hydrostatic pressure in the main reservoir or tank 10?

A. Yes, *I believe it operates satisfactorily.*

Q. Is it your opinion that the amount of liquid dispensed by the Zsoldos machine each time it operated would be the same, regardless of whether the tank 10 was full of liquid or almost empty?

A. I think so.

Q. How high would the liquid be in the tank 10 and still have the compensating mechanism 83, 84, 85 function properly?

Will you please mark that on this chart which
2035 we have placed on the easel?

A. Well, I presume that you could fill it as near the top as you like it.

Q. Will you please place a mark there in red pencil?

A. I have.

Q. Now where would the float valve 83 be at this high a level?

A. It would have ascended as far as the valve stem would permit it to ascend, since the valve stem and float are fixed together.

Q. Would you please mark on the chart where the high point of that float 83 would be?

A. Well, it seems to be, as far as I can tell from this drawing, just about the high point in the illustration.

Q. And where would the valve 85 be at this high line or high point of the fluid?

A. At substantially the same point shown in the illustration.

Q. The full line drawing showing?

A. That is right.

Q. How long could the liquid be in the tank then and still have the compensating mechanism 83, 84, 85 function properly?

2036 A. I believe the specification points out that the tension on the unnumbered spring immediately above the float 83 determines the extent to which the compensating valve 85 will descend.

Q. Where would you say that that low level would be?

A. Well, I should not imagine that it would work out of the range of the solenoid 88.

Q. I am talking about the level in the tank 10.

A. I am sorry. I misunderstood. I thought you were talking about the valve 85.

Q. No. I will repeat the question.

How low could the level be in the tank 10 and still have the compensating mechanism function properly?

A. I should imagine the level can get reasonably close to empty.

Q. Will you place the mark where you say that would be?

A. I would say reasonably close to empty would be there.

Q. Will you use a different color pencil?

A. I will mark the empty with an E and the full with an F.

2037 Q. Now where would the float 83 be at this low level of the fluid?

A. It descends as far as permitted by the tension adjustment spring, the unnumbered spring immediately above the float 83.

2038 Q. Would you mark in that last colored pencil where you think the top of that float 83 would be?

A. I have no way of guessing what that spring would do, but I will put a mark there for you. It obviously would be selected to serve its purpose.

Q. And where would the valve 85 be at this low level?

A. It would have moved out precisely the same distance that I placed between these two marks.

Q. Will you place that mark?

A. Yes.

Q. Now what would happen if the device were operated with the liquid in the tank 10 at a lower level that this low level E you have marked?

A. What would happen if it was operated lower than that?

Q. Yes.

A. I don't know. Nothing might happen. It might operate just as it did slightly above the mark. I am just making estimates here.

Q. I am asking your opinion as to what would happen.

A. I think it probably would be off a little bit
2039 in the filling, if you get too close to the bottom.

Q. Now the volume of liquid between the upper level and the lower level that you have just pointed out is what portion of the entire capacity of the tank 10?

A. Oh, I would guess probably 85 per cent.

Q. Would you say there was an orifice in the Zsoldos machine which controls the fluid flow when the valve 18 is opened?

A. Yes.

Q. Which orifice is that?

A. The orifice 16, the complementary part to the valve 18.

Q. Did you ever see a commercial vending machine like the structure shown in the Zsoldos patent drawings?

A. No.

Q. Did you ever see an operating model or any other operating structure like the structure illustrated and described in the Zsoldos patent?

A. I believe I have seen compensating valves on refrigerating machines, but not vending machines.

Q. Now I will refer you to Defendants' Exhibit No. 11, I believe, which is a chart—

2040 By the Court: What is it?

By Mr. McCanna: It is a chart, Defendants' Exhibit No. 11.

By Mr. McCanna:

Q. Did you ever make a filling machine constructed like Defendants' Exhibit 11 before April 4, 1949?

A. I never made any filling machine that I recall.

Q. Did you ever see a filling machine constructed like Defendants' Exhibit 11 before April 4, 1949?

A. Not in detail like that, no.

Q. Do you know of anyone who made a filling machine like Defendants' Exhibit 11 before April 4, 1949?

A. No.

Q. On page 1850 of the transcript, you said that if the device illustrated in Defendants' Exhibit 11 were operated without the float valve which you have added, the amount of liquid dispensed would probably vary slightly as the level of the liquid dropped in the reservoir 10.

How much in percentage do you consider slightly?

A. Well, figuring from the very top to the very bottom and allowing no additional, taking the machine
2041 just like the drawing, same proportion, everything—
2042 Q. Yes.

A. Oh, you might get as much of a variation as 20 per cent, maybe not. That has no additional static head there whatsoever because the valve is—

Q. Now—

A. (Continuing.) —just about at the bottom of the tank.

Q. Now Mr. Deletzke, what is your definition of an orifice type dispensing valve?

A. In my opinion, a pure orifice would have nothing else associated with it. If you talk about a valve of the orifice type, then I would say all of these dispensing valves are of the orifice type.

Q. Now Mr. Deletzke, do you think that the prior art patents cited by the Patent Office in the file wrappers of the original and reissue Mojonnier patents were as pertinent to the issues of validity as the 12 prior patents now being relied upon by the defendants?

A. No.

Q. (Continuing.) Which were not file wrapper references?

A. No, I do not.

Q. Now then am I to understand that you think the
2043 12 additional patents were more pertinent to the questions of validity than the file wrapper references?

A. I think Zsoldos is more pertinent than any one cited.

Q. Well, I am just talking about the 12 now. We will come to the others later.

A. Let me get your question. Do I think the 12 that were not cited were more pertinent than the ones that were cited by the Patent Office?

Q. I asked you the question whether you think these

12 additional patents are more pertinent to the question of validity than the file wrapper references.

By Mr. Clement: Your Honor, I think the only way to approach that is to take them individually.

By Mr. McCanna: I am asking about them collectively here and he has given one answer and now i will go to that and I will ask the question and get his opinion.

By the Court: If he can answer, he may.

By the Witness:

A. I believe that since these additional patents, such as Beyer—

2044 By Mr. McCanna:

Q. I am talking about the 12 as a group.

A. Collectively, I think the 12 additional patents are more pertinent than those cited by the Patent Office.

Q. Now what do you consider the best prior art reference against the Mojonnier patent, Mr. Deletzke?

A. The best references?

Q. No, the best reference, singular, I said.

A. I should imagine the Zsoldos patent, for example, is—

Q. And now, about any group of patents—what do you think of any group of patents?

A. Well, I think if you take the Zsoldos patent and add to that the float valve of the Fagan-Mojonnier or any of the others, you have the whole thing; you don't need to go any further than those two patents.

By Mr. McCanna: All right. That is all.

Oh, I would like to offer into evidence these two charts, Plaintiff's Exhibits 115 and 116.

By Mr. Clement: No objection.

By the Court: They may be received.

* * * * *

2046 By Mr. Clement: No redirect examination.

I would like to call Mr. Albert Mojonnier.

(Witness excused.)

ALBERT B. MOJONNIER, the plaintiff herein, called as a witness by the defendants under the statute, having been previously sworn, was examined and testified further as follows:

Direct Examination by Mr. Clement.

By the Court: Have you been sworn, sir?

By the Witness: Yes, sir.

By Mr. Clement: We are calling Mr. Mojonnier under the statute, your Honor.

By Mr. Clement:

Q. Mr. Mojonnier, do you have available the figures as to the number of fillers that were delivered by you under the contract between Mojonnier-Dawson Company and Mr. Brasile and Mr. Polivka and the subsequent corporations—

A. I think so.

Q. (Continuing.) —during the period of time that 2047 the contract was in existence?

(Witness produces documents.)

By Mr. Clement:

Q. Do you have—excuse me.

A. Do you wish the number?

Q. Yes. I would like to have them month by month if you have it, starting with December of 1951.

A. Well, it takes some accounting but I have an analysis.

Q. I have in my hand, Mr. Mojonnier, a statement of account which was part of the State court pleadings, a copy of it, and if you would rather use this, I would be happy to have you use it.

A. This will match up.

Q. How about December of 1951?

A. One filler.

Q. January of 1952?

A. We show none.

Q. None?

A. None.

Q. February of 1952?

A. None.

Q. March of 1952?

A. Two

2048 Q. I think you could just proceed month by month, if you will, Mr. Mojonnier.

A. April, we show none; in May, 1952, we show five; June, 1952, three; July, '52, three; August, '52, fifteen.

Q. Fifteen?

A. Fifteen. September, 1952, four; October, 1952, 22; November, 1952, 21; December, 1952, 22; January, '53, 19; February, '53, 31; March, '53, 46; April, '53, 25; May of '53, 52; June, '53, 30.

If I haven't made a mistake, the total should be 303.

Q. Of that figure of 30 for June of 1953, how many were shipped through U. S. Dairies Sales and how many direct, after the direct shipments were started, do you know?

A. These were all billed to Preformed Carton Corporation, sir.

Q. All 30, and in the months of May and June, then, the total shipped would be how many, in May and June of 1953?

A. I believe the Reporter could give you those totals. I don't have them in my head now because I got
2049 those off by months.

Q. Was there a difference in those 30 for June in the manner of collection?

A. You are, of course, referring to the last machines which were shipped, as instructed, directly to jobbers, for which we made collection direct and credited the collection to the Preformed Carton Company account. The number of those machines was 15.

2050 Q. Did you have a meeting in the month of April of 1953 in which there was an agreement to deliver additional machines under the contract until the situation seemed to be getting out of hand as far as back payments were concerned?

A. We had a meeting in April, 1953, but I don't believe you correctly stated what happened at that meeting.

Q. What happened at that meeting relative to this problem of money due to the Mojonnier-Dawson Company?

A. Mr. Brasile and Mr. Blum brought in a check of a fairly substantial size, insisted in response to direct questions, that they were doing nothing whatever in experimentation or construction of any machine competitive to ours or that might be competitive to ours and on the basis of that check and that promise and other promises, they induced me to ship additional machines during the month of May.

I believe that that meeting was on April 30th. I believe I once testified I thought it was April 24th and I checked my records and found that it was on April 30th, if my memory serves me correctly.

Q. Your shipments during the month of May were the largest of any made under the contract?

2051 A. Yes, sir. Those are the shipments we never collected for.

By the Court: We will suspend for a moment.

(Thereupon the Court gave his attention to another matter on the call, after which the following further proceedings were had herein:)

By Mr. Clement:

Q. What amount due to your organization would this total of 67 machines amount to that were shipped in May and June for collection from the Milk Container Equipment Corp.?

A. We had nothing to do with the Milk Container Equipment Corp.

Q. Well, whichever corporation it was that you mentioned before.

A. We were doing business with Preformed Carton and at their direction, were shipping, from instructions, to the other corporations.

Q. What total amount would be due if you had shipped the 67 machines?

A. There were other shipments but, 67 machines, at about—well, let us pull an average figure, $1100 to $1200 each, would be between sixty and seventy thousand

2052 dollars.

Q. So that the amount owing to you, was run up, from May 1st to June 15th, to approximately $67,000, is that correct?

A. After our April 30th meeting, there was still a very substantial sum due us.

Q. Is that correct, Mr. Mojonnier?

A. No, not as you stated it.

2053 Q. There were goods shipped during the months of May and June which amounted to a total of approximately $67,000.00, so far as what was to be paid to you, is that correct?

A. Something in that neighborhood.

Q. And this $67,000.00 indebtedness was built up by your shipping machines even though you had had this previous meeting in April, is that correct?

A. We shipped machines in accordance with their request at that meeting in April. They wanted those machines.

Q. But did you not, at that meeting, state that you would only go along only so far as the things stayed within reason or some such thing?

A. We told them that we would go along during the month of May.

Q. Well, you shipped 15 more machines in June, is that correct?

A. Yes. You are saying the figure. It probably is. I gave you the figures off the list. Whatever the record shows is what we shipped.

Q. Did you ever have any knowledge of the existence of Defendants' Exhibit 33 at that time?

2054 A. No, sir, and after quizzing Mr. Brasile, he denied then that there was any such thing in existence. I had no knowledge of it.

Q. Was it your purpose at the time you shipped this very large number of machines, in May and June, to increase the indebtedness to your company?

A. No, sir. It was our purpose to satisfy the trade who wanted these machines and who were willing to pay for them and who did pay for them.

Q. Did the existence of this $67,000.00 indebtedness which had been run up within a space of a month and a half, give you grounds for terminating the contract under the agreement?

A. The contract called for payment on a net ten day basis and the contract had been breached once before that. The breach had been remedied, from time to time. The breach continued.

Q. And yet you shipped $67,000.00 worth of machines in June and May—June and May, yes, is that correct? Just answer "yes" or "no."

A. The fact is that we shipped them.

Q. Mr. Mojonnier, when did you first learn of the machine which was being sold by the Brasile group of defendants?

2055 A. Are you speaking of—which? Are you speaking of Exhibit 33?

Q. No. I am speaking of the one that was actually sold, the first one that was actually sold by the Brasile group of defendants, the first machine which would fall

within the classification of the accused machine as we have been using it here.

A. As illustrated by Exhibit—is it 40, if I can—

Q. Yes.

A. In January, 1954.

Q. Did you inspect such a machine?

A. Yes, sir, I inspected one of them.

Q. Where did you inspect that machine?

A. At the plant of the Southern Belle Dairy at Somerset, Kentucky.

Q. What did you do in that inspection?

A. Well, first, some time prior to January 16, 1954, I called the Southern Belle Dairy and asked them if the information I had was correct, that they had a machine sold by a group in Woodstock, and they said they had.

I asked if I might have permission to look at it and they said that I might have such permission.

2056 Q. How did you find out they had the machine?

A. One of the dairy jobbers called me—I can't now state which one was there—and told me the machine was there.

Q. What did you do when you arrived at the Southern Belle Dairy?

A. I introduced myself to the girl in the office and asked if I might inspect the machine. She said she would be happy to have me do so and she introduced me to the plant superintendent.

Q. Was this prior to the issuance of the original patent, which was reissued as the patent in suit?

A. Yes, it was.

Q. What did you do then?

A. The plant superintendent took me into the plant where they were operating the machine on the end of a run and filling half-gallon Pure-Pak bottles that had been preformed by the U. S. Carton Forming Corporation.

Q. Did you disassemble the machine?

A. The machine was disassembled by the operators in the dairy after the operation. I watched the disassembly. I did not disassemble it myself.

2057 Q. Well, was it disassembled at your request?

A. It was disassembled for cleaning, not particularly at my request.

Q. Was it disassembled more than it would be for cleaning?

A. No, sir.

Q. Did you make any measurements of the machine?
A. Yes, sir.
Q. Did you take photographs?
A. Yes, sir.
Q. Was it operating when you left?
A. It had been put back together, ready to operate the next day.
Q. But you don't know if it was operating?
A. Well, it didn't operate that day. They were through with their run.
Q. Didn't you discover at that time there was no rod interconnecting the solenoid with the dispensing valve in the defendants' machine, the defendants' accused machine?
A. I discovered the construction of the machine, observed it, photographed it.
Q. Didn't you discover that there was no rod interconnecting the solenoid with the dispensing valve,
2058 Mr. Mojonnier?
A. Well, I discovered on the contrary that there was a rod interconnecting the solenoid with the dispensing valve.
Q. Extending through the machine, extending through the container?
A. The rod was the same as the rod in the Plaintiff's Exhibit 40.
Q. Mr. Mojonnier, I asked you if you didn't discover at that time there was no rod extending through the container, interconnecting the solenoid with the dispensing valve.
A. I am saying that I discovered—
Q. Just answer "Yes" or "No", didn't you discover at that time that that was true?
A. I can't answer that "Yes" or "No", and answer it correctly. I observed the machine and the machine was exactly as is shown in the Plaintiff's Exhibit 40.
2059 Q. Why can't you answer this "Yes" or "No"?
A. Well, in the first place, there is a rod that sticks up through the tank, and there is a rod connecting the solenoid to the valve.
Q. You disassembled the machine, didn't you, Mr. Mojonnier?
A. The operators disassembled the machine.
Q. You saw it disassembled?
A. Yes, I looked into it.
Q. You saw its complete construction?

A. And I saw there was a rod extending up into it and a rod connecting the solenoid to the valve.

Q. You still can't answer my question "Yes" or "No"?

A. No, sir, not and do it properly.

Q. Did you talk to Mr. Shearer at that time, at the Southern Belle Dairy?

A. I talked to Mr. Shearer by telephone from the dairy before I left. He was not at the dairy.

Q. Did you tell Mr. Shearer that you didn't have any patent on your machine?

A. I don't believe that Mr. Shearer and I discussed the patent.

Q. Did you tell him that you had a pending application or a patent applied for?

2060 A. I don't believe that we discussed the patent. I told him I was there for the purpose of seeing a competitive machine.

Q. How do you fix the date of that inspection?

A. I have a report dated January 18, 1954, which fixes the date as January 16. I have my expense books for the period to show that I was there on that date.

Q. That is a report prepared by yourself?

A. Yes, sir.

Q. Did you make any other inspections of the accused machine at that time or close to that time?

A. I personally did not.

Q. You didn't discuss the question of possible patent infringement with anyone at that Southern Belle Dairy?

A. Well, now let me look carefully at my report again. I believe not.

I have no record of having any such discussion and no memory of it.

Q. Did you know at that time that your patent had been allowed but had not yet issued?

A. Yes, sir.

Q. What was the purpose of your visit to the Southern Belle Dairy?

2061 A. Well, obviously, this group owed us a young fortune and were bringing out a competitive machine. I wanted to see what the machine was like.

Q. For purposes of comparison with the allowed claims of the patent?

A. For purposes of seeing what the machine was like, to see if they had made a machine like ours or if they hadn't.

Q. Was it your intention to establish whether or not it was an infringement of the claims which would be allowed?

A. I am not a patent attorney, sir. I went down there for the purpose of getting information which I could give to my attorney for proper action.

Q. Did you tell anyone down there that that is what your purpose was?

A. No, sir. I told them I wanted to see this competitive machine, and asked if I might inspect it.

Q. Did you direct anyone else to make additional inspections of other machines?

A. Yes, sir.

Q. Whom did you direct?

A. Mr. Kirkland, Mr. Oswald Kirkland of our organization.

2062 Q. When did he make other such inspections?

A. He made one other such inspection. I will give you the date in a moment—on January 26, 1954.

Q. When did your patent issue, Mr. Mojonnier?

A. February 2, 1954.

Q. Referring back for a moment to the Southern Belle inspection, do you recall, Mr. Mojonnier, making a statement at the time of your deposition on April 22, 1955, when you were questioned by Mr. Voland, and I will read your statement—this is page 121:

"I told you this morning that I had seen the machine, I watched it operate, I had taken it apart, I measured it, I photographed it, I examined it for a nameplate, and I had talked to three people at Somerset, Kentucky, the operator of the machine, the plant superintendent, I presume you would call him, and the owner. I talked to the owner by telephone. He was not at the dairy."

Do you recall making that statement about taking 2063 it apart, measuring it and photographing it yourself?

A. I believe when I made that statement that I said I had it taken apart. I believe it is reported that I had taken it apart. Actually I was there when it was taken apart. It was disassembled in the normal manner for normal cleaning. That is all.

Q. Where did Mr. Kirkland go on his inspection? On what date was that again?

A. Well, he left Chicago January 25, so he must have been in the plant on January 26, 1954, and he went for the purpose of installing a filler to the plant of the Green—let

me get the name correctly—Green's Ice Cream Company, Schenectady, New York.

Q. What did he do there?

A. He installed a Model AP Mojonnier-Dawson Electromatic filler.

Q. Did he have it taken apart?

A. The Model AP filler?

Q. Excuse me. Did he inspect one of the accused machines there?

A. Yes, sir.

Q. Did he have the accused machine taken apart or did he take it apart himself?

2064 A. Well, I will read from his report:

"One of the first things that I did after arriving at the plant was to thoroughly inspect the semi-automatic filler that was shipped by Purity Pack Corporation at Woodstock, Illinois."

Q. Does he say he took it apart or had it taken apart?

A. He said: "We," speaking of Mr. Jack Perryman, who is the jobber—

"We disassembled most of the machine and looked for nameplates or any identification of parts."

Q. Whose jobber is Mr. Perryman?

A. A jobber from Tom Lockerbie, Incorporated.

Q. Is that one of your jobbers?

A. Yes, he sells some of our stuff.

Q. Did he take pictures of that machine?

A. Yes, he did.

Q. Did he talk to the operator or the owner or the superintendent of that Green Ice Cream Company?

A. It says here that he talked to Mr. Green; that he talked to Mr. Edward G. Willette of the Woodstock organization, and he talked to Mr. Perryman.

2065 Q. Did he discuss the question of patent infringement with those people?

A. There is no indication that he did. He had no instructions to do so.

Q. Did he have instructions to take the machine apart?

A. He had instructions—I can tell you exactly what they were.

Q. Just tell me whether he had instructions to take the machine apart.

A. He had instructions to observe the machine. When I say "take the machine apart," I mean simply to tear it down as much as you normally do for normal cleaning. Not any other type of disassembly.

Q. Did Mr. Kirkland inspect the machines elsewhere?

A. Not until very recently. I believe I stated on deposition that I thought someone had inspected them elsewhere, but on checking Mr. Kirkland, that was the only one he inspected at that time.

Q. Did he inspect any of the machines prior to the date of issuance of the patent?

A. No, sir.

Q. Your mechanism or machine, that is the Mojon-
2066 nier-Dawson machine, has that ever been inspected or taken apart in a similar manner by a competitor?

A. Yes, sir.

Q. Is that a common practice in the dairy trade?

A. I wouldn't want to say that it is or isn't, but it is done. I think there is testimony in this case that there was one at the Pure-Pak Company, at Ex-Cell-O Corporation. I happened to know that they had two different ones there.

Q. I am talking about in the field, such as at the Southern Belle Dairy or Green's Ice Cream Company?

A. I don't believe that is an unusual procedure to observe a competitor's machine.

Q. To take it apart, make measurements, take pictures?

A. You are intimating that taking it apart means tearing the machine down. Taking the machine down for cleaning is a normal process, done every day.

Q. Was the machine at the Green Ice Cream Company operating when you left?

A. No, sir, it had been taken out of the line.

Q. It had been taken out of the line?

A. Yes, sir.

Q. Before you got there?

2067 A. Before Mr. Kirkland got there. I wasn't there.

Q. Excuse me, before Mr. Kirkland got there.

A. Yes, sir. Mr. Willette told Mr. Kirkland that the machine should never have been shipped; that it didn't work, according to his report.

Q. At the Southern Belle Dairy when you were making your inspection, did you say anything about the fact that the accused machine might have been copied from your machine?

A. I may have been asked if it were copied from our machine because I know that those people confused that machine with our machine.

Q. What was your answer?

A. I believe if I was asked that I would have said "look

for yourself," and "use your own judgment, I am not going to state."

Q. Do you recall whether you were asked that?

A. I am not sure that I was.

Q. You don't recall?

A. I recall very little discussion there other than observation and photographing of the machine, and I have the photographs with me.

2068 Q. I refer again to your deposition of April 22, on page 126, where we were talking about the Southern Belle visitation. Mr. Voland asked the question:

"Did you tell them that that machine was copied from your machine?"

Your answer:

"I might have, because certainly some parts were identical to our machine."

Prior to that question you had indicated, in response to a question on page 125, the question to which it refers back—there was some intercourse in between, but the answer was:

"You want to know, I presume, whether the word patent was ever mentioned during the afternoon."

Then there is some discussion, and the original question was—

By Mr. McCanna: What page?

By Mr. Clement:

Q. (Continuing.) I am referring really to page 126, and without going back through all the colloquy before that, with reference to the same question about whether you had said anything about it being copied, you

2069 say:

"I believe they asked me. I believe one of the men in the plant asked me if we made this machine, stating that it looked very much like our machine, and he wondered if it was the same thing.

"I believe there was some discussion of the machine being a close imitation of ours, but I cannot recall anything I said that could properly be construed to be a statement that that machine was an infringement."

Do you recall making that statement?

A. That is correct.

Q. So it was quite possible that you did say it was copied from your machine, is that correct?

A. I don't know that I did. I might have.

Q. Where else did Mr. Kirkland see such machines?
By the Court: I think we will recess at this time until tomorrow morning. I have a preliminary call of cases tomorrow morning. You may come in at 10:20, gentlemen.

* * * * *

2072 And thereupon the following further proceedings were had herein:—

By the Clerk: Case on trial.
By the Court: Proceed.

ALBERT B. MOJONNIER, called as a witness by the Defendants, having been previously duly sworn, was examined and testified further as follows:

Direct Examination (Ctd.) by Mr. Clement.

Q. Mr. Mojonnier, we were discussing yesterday afternoon the fact that you had directed Mr. Kirkland to go to the Green Ice Cream Company to make a second inspection of the accused machine.
What was the purpose of the second inspection of the accused machine?
A. The circumstances were these—
Q. Just what was the purpose?
A. The purpose of his visit was to install a Model AP Mojonnier-Dawson filler. Since I had been informed by Mr. Perryman, sales manager of Tom Lockerbie, Incorporated, that there was a machine sold by someone in Woodstock at that plant, I wished to avail myself of the second opportunity to see the machine and see
2073 if it was like the one I had seen in Kentucky.
Q. When was this visit that Mr. Kirkland made?
A. Mr. Kirkland left Chicago on the 25th of January, 1954, and returned on the 28th of January, 1954.
Q. Did you instruct him to disassemble the machine and take measurements, or to have it disassembled?
A. I can tell you exactly what I instructed him to do.
Q. Just answer the question, Mr. Mojonnier.
A. Will you tell me what you mean by disassemble?
Q. Are you an engineer, Mr. Mojonnier?
A. I am.

Q. Did you tell him to take the machine apart in any fashion whatsoever?

A. I gave him no specific instructions along those lines.

Q. Did he have it taken apart or take it apart himself, in part?

A. He had it taken down to the point where it is normally taken down every day for cleaning—that far and no farther.

Q. Did he take measurements of the machine?

A. I have no measurements that he took, so I believe not.

2074 Q. Do you know how long he spent inspecting the machine?

A. His report says he did it one afternoon. He also did some other things that afternoon, so he couldn't have spent more than a short time on it.

Q. In your deposition on April 22, 1955, Mr. Mojonnier, you indicated that there were other inspections or examinations of other accused machines, and you mentioned—

By Mr. McCanna: What page?

By Mr. Clement: Pages 44 and 45.

By Mr. Clement:

Q. You also mentioned, I believe, that these were made in Kentucky and other states, Tennessee, Indiana. You said at that time that you couldn't remember exactly when those inspections were made; that you could check your records and tell us.

Do you have that information now, Mr. Mojonnier?

A. Yes, sir, I reserved the right at that time to check my records. I have done so.

Q. What do your records indicate as to when such inspections or examinations were made in other locations in the field?

2075 A. I have no records that indicate any inspections or any photographs taken like the two to which I have testified.

I do have a recollection that various servicemen, Mojonnier-Dawson, reported to me from the states I indicated that they had seen machines of this type installed there. That is all I have.

Q. Do you have any record or recollection of Mr. Kirkland making other visits for the purpose of inspection?

A. None, not until recently. He did see one of these

machines at Saub-Id-Issen-Wittner Dairy in South Bend, Indiana, quite recently, within the last few months.

Q. Mr. Mojonnier, do you recall making the statement, which appears on page 55 of the April 22, 1955, deposition, in answer to a question regarding these inspections:

"We went out and checked a bunch of machines to see what they were like."

The first part of the answer is:

"It might be because there was a considerable interest in this machine the minute it came on the market. We
2076 went out and checked a bunch of machines to see what they were like."

Now do you have any recollection of going out and checking a bunch of these machines?

A. I told you exactly what we did. That is exactly what we did every bit of it. We inspected the two machines. Our servicemen saw the other machines, called me and told me they were there. They described them to me over the telephone. That is all that we did.

2077 Q. And this was before the patent issued, is that correct?

A. Yes, sir.

Q. Did your servicemen inspect these machines?

A. You mean in the manner that Mr. Kirkland did?

Q. In any manner.

A. They looked at them, that's all.

Q. Did they discuss the construction with the purchasers?

A. Not to my knowledge.

Q. Did you give your servicemen instructions to inspect these machines?

A. I did not. I asked them to report to me if they found any of them in use but that's all, just the fact that they were there.

Q. Just report to you the location of these machines?

A. Right.

Q. Mr. Mojonnier, isn't it a fact that when you returned from the Southern Belle Dairy that you immediately got on the telephone and called Mr. Brasile's jobbers to warn them of trouble regarding this machine?

A. That is not a fact. That is not true.

2078 Q. Did you call any jobbers before the issuance of the patent relative to this accused machine?

A. I called no jobbers on my own, to talk about this patent at all.

Q. On your own, did you say?

A. I was called by one or two jobbers. I cannot remember at this time who they were but I can recall one or two cals from jobbers asking about the machine.

I made no calls myself. I volunteered nothing.

Q. Do you remember the substance of those conversations with these jobbers?

A. I do.

Q. Did you discuss your patent which was about to issue with these jobbers?

A. I told them that we had a patent which was shortly coming to issue. I had not seen the claims. I did not know what they were.

Q. You had not seen the claims at that time?

A. No, sir.

Q. And you are referring to the claims which had been allowed, is that correct?

A. Yes, sir.

2079 Q. Had you seen the claims as they were submitted in the amendment which was finally allowed in the original application?

A. I did not follow the details of that application.

Q. Had you seen the claims of the amendment which resulted in the allowance of the original application?

A. I can't say for sure that I did. I just said I had not followed that application carefully.

Q. Did you receive a copy of that last amendment from your attorney?

A. I don't recall that I did. I left the matter in his hands.

Q. Do you have any further recollection of the substance of your conversations with these jobbers prior to the issuance of the patent?

A. As best I can recall at this late date, they asked me if this wasn't a copy of our machine. I said, "Well, judge for yourself, just look at the two and compare them."

"But don't you have patents on this machine?"

"We have a patent which is coming to issue. I do not know what allowances we will get."

2080 Q. Did any of these jobbers mention the eleven patent numbers that appeared on the machine, on the name plate?

A. They did not.

Q. But they did say, "Don't you have patents on this machine, or these machines?"

A. They said that. I just testified so.

Q. Where would they get that information?

A. I think we have in this case that Mr. Allen thought that such a revolutionary thing certainly would be the subject of patent.

Q. Particularly when it had eleven patent numbers on it, is that correct?

A. No, sir, that doesn't follow. That is a name plate. That's all it was used for.

Q. Have you exhausted your recollection of the conversations with the jobbers?

A. Yes, sir. I have told you everything that happened.

Q. Mr. Mojonnier, what type of sales structure, so far as your organization was concerned, did you have prior to the time of the entering into of a contract in December with Mr. Brasile—December of 1951, with Mr. Brasile and Mr. Polivka?

2081 A. Would you clarify that, please, as to what you mean by "sales structure"?

Q. How did you make your sales, for example, of equipment, to the dairy industry?

A. Both direct and through all of the some 250 jobbers in the industry. We had done business, from time to time, with practically all of them.

Q. Was that a mail solicitation, primarily?

A. I have known those men for years.

Q. Answer the question, Mr. Mojonnier.

A. Say it again, please.

Q. Was that a mail type of solicitation, primarily?

A. No, sir.

Q. What type was it?

A. Personal. I have known them for years.

Q. What do you mean by that? Did you go out, around with these 200 jobbers, personally?

A. I have seen them at dairy shows, I have talked to them on the telephone. I have solicited them by mail. I have been in their plants.

Q. Did you have any jobbers' agreements with these 200 people?

A. We have no jobbers' agreements, either then or now.

2082 Q. You consider these 200 people your jobbers, is that correct?

A. Some of our products are sold to any jobber in the dairy industry that can pay his bills.

Q. What percentage of your purchases—of the purchases of your dairy machine equipment is made on the basis of a mail solicitation?

A. I have no figures that can break that down.

Q. Is it 50 per cent?

A. I am not even going to guess. I have no figures that can break that down.

2083 Q. How many of these 200 jobbers do you see in a year's time, personally?

A. Well, during 1954, on a guess, I saw two-thirds of them, most of those at the dairy show.

Q. I believe Mr. Dawson, Mr. Lynn Dawson indicated he was sales manager of the company, is that correct?

A. He had that title and his duties were the sales of aerosol equipment.

Q. Is the Badger Products Company of Neenah, Wisconsin, one of your jobbers?

A. Yes, sir.

Q. Is Barnett & Company of Indianapolis, Indiana, one of your jobbers?

A. Yes.

Q. Is the Brooks Supply Company of Joplin, Missouri, one of your jobbers?

A. They were one of the first purchasers of our equipment in 1946.

Q. Is Ward C. Cramer of Boston, Massachusetts, one of your jobbers?

A. Yes, sir.

Q. The Dico Company of Des Moines, Iowa?

A. They sold the first model CA Mojonnier-Dawson filler. They have sold hundreds of them, yes.

2084 Q. They have sold hundreds of them?

A. Yes, of our fillers.

Q. How many Pure-Pak machines have they sold as distinguished from American Can?

A. I don't have those figures with me. They sold American Can machines before the Pure-Pak machine was brought out, a substantial number through the State of Iowa.

Q. How many do you mean by "a substantial number"?

A. Maybe I can make a guess—35 to 50, I would say.

Q. In what years was this?

A. 1950 and 1951.

Q. 35 to 50 American Can fillers in 1950 and 1951?

A. Well, there were a total of 100 sold in 1950 and 1951 and Dico was our biggest jobber of those machines.

Q. Just a moment, 100 American Can?

A. 100.

Q. Did you break that down to 1950 and 1951?

A. I did the other day and I can again.

Q. All right.

A. 24 in 1950 and 76 in 1951.

Q. How many of that 100 were sold by the Dico
2085 Company?

A. I have said on a guess 35 to 50. I would have to check my records to be sure, but they had a lot of them sold through Iowa and surrounding states.

Q. How many Pure-Pak machines have been sold, just roughly, by the Dico Company; do you have any idea?

A. I do not know.

Q. Is it in the hundreds?

A. I don't know. I would have to check the records and I don't have those records.

2086 Q. You said a moment ago that Dico had sold hundreds of these fillers for you.

A. They sold a lot of them. They still sell a lot of them.

Q. Is the Fuller Supply Company of Birmingham, Alabama, one of your jobbers?

A. We have sold Fuller Supply Company our specialties. I don't believe I ever sold them a filler.

Q. Are they one of your jobbers?

A. Yes.

Q. In the usual sense of the term "jobber"?

A. In the usual sense of the term "jobber."

Q. When did they become one of your jobbers?

A. I couldn't tell you that without checking my records.

Q. Within the last five years?

A. Well, we have been in business ten years—it was sometime in that period.

Q. Would it have been before or after the termination of the contract with Mr. Brasile and Mr. Polivka?

A. I wouldn't say at this time. I don't know.

Q. How about Girton Sales Company of Millville, Pennsylvania?

A. They have been a jobber of ours for many years.

2087 Q. How about Ralph Holcombe of Wilmington, Delaware?

A. He was killed in an automobile accident last fall. He was one of our jobbers.

Q. How about Mailender-Barnett of Cincinnati, Ohio?

A. They have handled our products for many years.

Q. Are any of those that I have mentioned so far ones that became jobbers only after you entered into this contract with Mr. Brasile and Mr. Polivka?

A. To the best of my knowledge, without going back and checking my detailed records, I think you will find that we have sold specialties and other products to those people, from time to time, over the ten years we have been in business.

Q. Mr. Mojonnier, I am talking about being jobbers. I am not talking about sporadic sales by mail with these people. I am talking about jobbers specifically in the dairy industry.

A. Mr. Clement, if we sell products to them, they are then our jobbers because we sell those products on a jobbing basis and they get a jobbing discount.

Q. And you have 200 jobbers, you regard them as jobbers?

A. There are 200 jobbers in the dairy industry 2088 and we solicit all of them.

Q. Oh, you solicit them?

A. And we sell. I have testified that we sell certain of our products to all of them.

Q. All of the 200?

A. Yes.

Q. In the dairy field?

A. Yes.

Q. How about Ralph R. Miller & Sons of Canonsburg, Pennsylvania?

A. He has been one of our jobbers for years.

Q. Northwestern Carton Formers of Moorehead, Minnesota?

A. Northwestern Carton, under that name, was formed after the contract of December 29, 1951, but the same group runs the Northwestern Supply Company of the same address. They have been our jobbers for a long time.

Q. Regan Company of Mobile, Alabama?

A. Yes.

Q. Riley Dairy Supply of Grand Rapids, Michigan?

A. Yes.

Q. When you say "Yes," what do you mean?

A. They have been our jobbers for a long time.

2089 Q. Since before the contract?

A. Yes, sir.

Q. That we have been discussing?

A. Yes, sir.

Q. Sewell Miller Dairy Supply Company of Atlanta, Georgia?

A. Sewell-Miller, under that name, was organized recently. There has been a change. They are now Sewell-Simpson. Under the Sewell name, they have been jobbers for a long time and they are now under the Sewell-Simpson name.

Q. George R. Wood of Big Rapids, Michigan?

A. I can't say whether we have sold Wood or not. He is a very small man. I believe we have sold them a few dippers and specialties like that, on a jobbing basis.

Q. Prior to the Brasile-Polivka contract?

A. I think so. I would have to check my records to be sure.

Q. Do you know whether or not all of these jobbers I have named were jobbers for Mr. Brasile and Mr. Polivka in the sale of the accused machine? Not the accused machine, the machine which was sold under the contract?

2090 A. Well, I have no knowledge of who their jobbers were other than we were instructed to ship to certain jobbers and some of those names I do not recognize as having received shipments.

Q. You have no knowledge of who their jobbers were?

A. Other than they told me to make shipments to certain jobbers.

Q. Did you have salesmen in the field calling on jobbers in 1948?

A. Well, I was in the field calling on jobbers and, from time to time, we pried Mr. Dawson off of his aerosol activities and we had him call on jobbers and we had another man by the name of Berrins.

Q. How about the year subsequent to 1948?

A. After 1948, the same applied. I don't remember just how long Berrins worked, but the situation with respect to myself and Mr. Dawson applied up to 1951.

Q. How many of these 200 jobbers you referred to were

jobbers of paper milk fillers in 1951 or before—and before?

A. Well, that is a pretty hard question to answer
2091 without going back and checking.

Q. How many of those that I named specifically?

A. Well, Dica was, Girton was.

Q. That is two.

A. I am not sure about Riley. I would have to check my records. I am not sure about Northwestern.

Q. Just tell me the ones you are sure about. There are fifteen altogether that I read. How many of the fifteen?

A. I remember considerable correspondence with Regan way back in 1950. I don't remember whether an order came out of it or not. I can't state that.

Q. All right. That is two out of fifteen. Are all of these fifteen now jobbers for you in the sale of paper milk carton filling mechanisms and devices?

A. No, sir.

Q. How many of them are?

A. Well, Dico, Brooks, Northwestern, Badger, Holcombe is dead.

2092 Q. Was he?

A. He was for a while. Miller—Riley is not.

Q. Was he?

A. No. Sewell Miller is. Girton is, in a very limited sense.

Q. Is?

A. Is, in a limited sense. He sells one now and then.

Q. How about Barnett & Company?

A. Barnett hasn't sold one for months and months. They have sold some.

Q. Since the contract was terminated?

A. Yes. So has Mailender-Barnett sold some. They are not active now.

Q. How about Ward Cramer?

A. He has sold some. He is not active now.

Q. How about Fuller Supply?

A. No.

Q. Never?

A. No.

Q. Ralph Holcombe?

A. Not to my recollection.

Q. Holcombe?

A. I answered on Holcombe. He sold some.

2093 Q. What did you say about Miller?

A. You are talking about Miller?
Q. Ralph R. Miller.
A. Ralph Miller, he has sold some, yes. He is still active.
Q. Regan Company?
A. No.
Q. Never?
A. No, we have not sold any through Regan.
Q. George R. Wood?
A. No.
Q. If my notations are correct, there are four out of the fifteen that you have not dealt with, is that correct?
A. That might be.
Q. So there are eleven all told that you have dealt with according to your present recollection?
A. If that is what I put on. If you have stated it correctly, that is it.
Q. You had two previous to that, is that correct, according to your recollection?
A. Well, that is all I recall at the present time. I would have to go back into my records on American Can filler to be sure.
2094 Q. How soon did you get in touch with any of these jobbers about selling machines directly after the termination of the contract?
A. The shoe was on the other foot. They came to us.
Q. How soon did you have negotiations with them?
A. Oh, it varied. Some of them directly after the termination. Some of them not for a number of months.
Q. You did not get in touch with any of these jobbers to ask them to sell directly or take your machine and sell directly?
A. We notified some of the jobbers that the contract had been terminated and we were in a position to sell to them directly—some of them I knew better and had worked with for years.
Q. Did you have customer lists of the Brasile-Polivka corporations?
A. No.
Q. You did know to whom you had shipped machines, however?
A. Only in general. The machines were switched around so much, we lost track of most of them.
Q. You had a record of to whom you shipped machines, didn't you?

2095 A. We had records. In many cases the machines were picked up by the Woodstock group and the destination to us was unknown.

2096 Q. Did you send an announcement to the Dico Company prior to July 17, 1953, a formal announcement, indicating that it was now in order for them to do business direct with you on all machines and accessory parts?

A. I sent an announcement, and I am sure a copy went to Dico after the termination of the contract stating that.

Q. How long after?

A. I don't remember exactly now. I would have to find the announcement.

Q. One week, a month?

A. Shortly after.

Q. Ten days?

A. I don't know the exact number of days, but shortly after. Of course, with Dico, we had been doing business with them on American Can all along through the contract period.

By Mr. Clement: I would like to have the deposition of April 22 marked for identification as Defendants' Exhibit—

I understand the Reporter has the original copy. I will defer the marking until we get it back. I thought 2097 it was still here.

By Mr. Clement:

Q. Mr. Mojonnier, was there any use of Pure-Pak cartons, and I am speaking of Preformed Pure-Pak cartons, by the small dairies prior to the time Mr. Brasile came to you about his idea of preforming and reopening and filling these cartons?

A. No, sir.

Q. Mr. Brasile's idea encompassed two things, did it, namely, the preforming of the cartons and the method of filling them or reopening and filling them?

A. Well, you are stating it pretty broadly. He encompassed the idea of preforming them. He brought the preformed carton to me, and he said, "I think you can figure out how to open, fill and close this."

Q. He didn't tell you his idea about opening it?

A. He said he thought it could be pulled open, but he didn't know how.

Q. He didn't demonstrate how it could be pulled open?

2098 A. With his fingers, not mechanically. He had no sketches, no mechanism.

Q. Did he use his fingers to simulate what we at times call a claw type of opener to pull the carton open?

A. He pulled it apart with his fingers, yes.

Q. Did he use one hand in the fashion I am now indicating, forming a two-sided claw, one side with my thumb and one with some of my other fingers?

A. Well, as I recall, he took it in his two hands, and with two thumbs and two fingers pulled the top apart.

Q. Similar to the method I am demonstrating now?

A. No, sir.

Q. Will you show me how he demonstrated it to you?

A. Certainly. Give me a quart carton, though, because it was on a quart carton.

By Mr. Clement: Does anyone have a quart carton available? Thank you.

By Mr. Clement:

Q. Here you are, Mr. Mojonnier. Will you demonstrate it, please?

2099 A. The cartons that were brought in were squeezed down like this, not the way they are preformed today. He took them this way (demonstrating) and said "I think they can be pulled open like that. I think you can figure out the way to pull them open, fill them, close them, and staple them."

Q. You are saying, in effect, that he did not use one hand in the form of the claw type opener?

A. I am sure that he didn't.

2100 Q. Was that a new method of doing business, in the sense of preforming the Pure-Pak cartons and reopening and filling them?

A. I believe we have always given Mr. Brasile credit for thinking up that preforming idea.

Q. Did Mr. Brasile work with the Ex-Cell-O Company to obtain special agreements which could be negotiated with the present lessees of Ex-Cell-O preforming machines so that they could be permitted to manufacture preformed cartons for purposes of use by other small dairies, small dairies which did not have these preforming machines?

A. That is a very long question. To be sure I answer it correctly, will you have it read back to me?

By Mr. Clement: Certainly.

(Whereupon the question was read as above recorded.)

By Mr. Clement:

Q. I said other small dairies. Obviously the small dairy wouldn't have the big machine.

A. I understand. Mr. Brasile did a lot, and I did a lot of it, too. I threw my weight into that picture.

2101 Q. Who took the initiative in arranging for the carton supply?

A. Oh, I would say he did, and then the Pure-Pak Company came to me to find out about the idea, asked my opinion, because I had known them for a long time.

Q. And because you were making the filler portion, I presume?

A. Yes. I recall that a group of them came in on several occasions and discussed the matter.

Q. Did you ask Mr. Brasile how he was going to get cartons?

A. I believe I have testified that I asked that before the contract was signed, and that he said he planned to have them made at Mr. Polivka's plant at Antioch, Illinois, or at La Grange.

Q. Did you have any difficulties with the Public Health people with respect to this idea of preforming cartons, if you know?

A. Nothing that I would call difficulty. I called Harold Wainess in very early in the game and asked him—

Q. You called him in?

A. I called him in.

Q. Had Mr. Brasile talked to him before you 2102 called him in?

A. Well, I don't know that of my own knowledge. I don't think so. I think I took the initiative.

Q. Did Mr. Wainess know of this idea before you called him in?

A. I can't say that. I don't know what Mr. Wainess knew.

Q. What did you discuss with Mr. Wainess? Did you ask him whether this would be approved by the Health authorities?

A. Well, I remember very distinctly asking him the $64 question at the La Grange plant of Willow Farms in early January, 1952, as to whether this whole idea was practical or not.

He said, "Al, I think from the filler standpoint, this thing is completely practical. I am going to reserve my

decision as to this wet plant preforming. I am not sure that that is practical."

Q. Did Mr. Brasile work on getting approval of the wet plant preforming?

A. Oh, I am sure that he worked on it. To this day wet plant preforming is more tolerated than approved.

Q. But it was permitted at that time when you were first starting out?

2103 A. And it is permitted today. There are some hundred wet plants throughout the country today.

Q Under this contract arrangement, you were in the position of a supplier to Mr. Brasile and the corporations formed by him, were you not?

A. Well, the contract speaks for itself. We were under contract to the Preformed Carton Corporation.

Q. You were under contract to make these machines for sale by others, is that correct?

A. The contract says nothing about for sale by others. It merely says we sell them to the Preformed Carton Corporation.

Q. I mean the Preformed Carton Corporation when I said "others." Is that correct? If you use that interpretation, the contract provided for the sale by the Preformed Carton Corporation, is that right, or a corporation to be formed after you entered into the contract with Mr. Brasile and Mr. Polivka, is that correct?

A. If I understand you correctly, you are asking if the contract provided for Preformed Carton to sell to others. If it contemplated that. Is that right?

Q. That is correct.

A. It did.

2104 Q. This business in this new type of filler was built up through the efforts of the Preformed Carton Corporation and the others that succeeded them, is that not correct?

A. And my own efforts. Plenty of my own efforts, too.

Q. Did you go beyond your position as a manufacturer?

A. I introduced those jobbers to Brasile.

Q. All of them?

A. No, not all of them, but a good many of them—Dico and Brooks.

Q. And?

A. And Northwestern, Girton.

Q. Personally?

A. Or by telephone. Maybe some others.

Q. This was the same business that was taken over by you after the termination of the contract, after the $67,000.00 indebtedness was run up in six weeks, is that correct?

A. You will have to split that question up. You have two or three things in there. In the first place, no $67,000.00 indebtedness was run up in six weeks. They owed us
2105 $40,000.00 at the beginning of the six weeks.

Q. You delivered in the six weeks $67,000.00 worth of machines, didn't you, or roughly?

A. Yes, sir.

Q. And that was a very unusual amount, was it not?

A. No, sir. They had wanted those machines. They were shipped out sight draft bill of lading. They collected for those machines.

Q. Weren't the deliveries in the month of May considerably above what they had been in previous months?

A. Certainly because they wanted more. Brasile said in the meeting of April 30th all he needed to cure his troubles was more fillers.

Q. Mr. Mojonnier, I show you a copy of a statement of the Mojonnier-Dawson Company, and ask you if this statement gives the amount due at the end of April, 1953?

By Mr. McCanna: If your Honor please, are we trying this contract suit that is in the State court now? It seems to me that this whole line of testimony goes rather far afield. I don't know just how that would justify
2106 infringement of the Mojonnier Electromatic filler patent regardless of how that State court case is decided.

By Mr. Clement: Your Honor, it has been our allegation all the way through that this patent suit was brought in bad faith, and I am building a background for the activities relating directly to the patent.

This is the termination of the contract, and Mr. Mojonnier had just stated that there was a considerable amount of indebtedness at the time that this $67,000.00 indebtedness was run up, and I am just attempting to show that there was not such a large indebtedness but that it was all brought about by this six weeks of frenzied activity.

By the Court: Objection overruled.

By the Witness:

A. I can't tell from this statement what the indebtedness was at the end of April because this is outstanding as

of June 1st, 1953, and it totals $62,638.90. There
2107 were some payments at the end of April and also during the early part of May.

By Mr. Clement:

Q. Do you have any records available which show the indebtedness at the end of April, 1953?

A. I have, not with me. I told you what I think it was, around $40,000.00.

Q. Would you check those records and let us know what that indebtedness was?

A. As of the end of April, 1953?

Q. That is correct.

A. Very well.

Q. Mr. Mojonnier, would you also when you are checking your records, determine what was due on June 1, 1953?

A. All right.

Q. Mr. Mojonnier, I believe you have already testified that you sent out eighteen to nineteen thousand notices to the trade concerning the filing of this suit, is that correct?

A. We sent one to each dairy on Olson's mailing list, which would total something in that neighborhood.

Q. Something in the neighborhood of eighteen or
2108 nineteen thousand?

A. I think eighteen thousand three hundred is their total list.

Q. Did you make any effort to see that these notices didn't go to those who had previously been notified?

A. No, the notices were included in the mailing. I checked the date of mailing. It was the end of March, 1954.

Q. There were others who had been notified, other than through this mailing, however, is that correct?

A. Other than the printed notice?

Q. Yes.

A. The jobbers had received notice by letter.

Q. When was that?

A. Sometime subsequent to the date of the letter, which I believe is February 20. Sometime within ten days or two or three weeks after that.

2109 Q. What is the date of the notice to the trade, if you recall? I hand you Defendants' Exhibit—

A. It was printed with a date on it of February 20, 1954.

Q. I hand you a copy of that notice which has been

marked for identification Defendants' Exhibit 31. Is that a true copy of that notice?

A. Yes, it is.

By Mr. Clement: I will ask the reporter to strike the identification, and I offer it in evidence as Defendants' Exhibit 31.

By Mr. McCanna: No objection.

By the Court: It may be received.

(Said document, so offered and received in evidence, was marked DEFENDANTS' EXHIBIT 31.)

By Mr. Clement:

Q. That notice then went to substantially every potential purchaser of a machine of this character, is that correct?

A. I believe that is right.

Q. Mr. Mojonnier, I hand you a letter which has been marked for identification Defendants' Exhibit 30 and ask you if that is a copy of the letter that you sent to the
2110 jobbers, and if that is your signature that appears thereon.

A. Yes, that is.

Q. What is the date?

A. February 20, 1954. I have testified it went out within ten days to several weeks after that. I don't know the exact date it went out.

Q. Do you recall when this suit was filed, Mr. Mojonnier?

A. I think the record shows that. I don't recall at the exact moment the exact date.

Q. February 19, 1954.

A. If what you are getting at was was this notice prepared directly after the filing of the suit, it was.

Q. This notice is dated February 20, 1954, is that correct?

A. It was prepared. However, it took quite a while after that to thoroughly check it before it was mailed out.

By Mr. Clement: I would like to offer into evidence Defendants' Exhibit 30, being this letter of February 20, 1954, to the jobbers from Mr. Mojonnier.

2111 By Mr. McCanna: No objection

By the Court: It may be received.

(Said document, so offered and received in evidence, was marked DEFENDANTS' EXHIBIT NO. 30.)

By Mr. Clement:

Q. Did you ever receive a patent infringement notice yourself concerning dairy equipment, Mr. Mojonnier?

A. I don't believe so.

Q. Have you ever heard of such notices being circulated in the dairy trade, such as you sent out?

A. Yes, sir.

Q. 18,000 of them?

A. Yes, sir.

Q. Did you give any oral notices in addition to these written notices?

A. When asked about the patent on the telephone, I referred only to the written notice. I said I had no statement to make but what it said on that paper.

Q. Did you have any telephone calls before that paper went out?

A. I believe I testified earlier this morning that I had a few, and I testified as to how I answered them.

2112 Q. Did you call Mr. H. C. Sewell of Atlanta, Georgia, prior to the time that this notice went out?

A. I have no such recollection.

Q. Did he call you?

A. I have no such recollection.

Q. Did you ever receive a letter from Mr. Brasile dated February 11, 1954, concerning the fact that there were rumors in the trade that you regarded his machine as an infringement?

A. I received a letter from him stating something that was not a fact.

Q. Do you have a copy of that letter?

A. I have the original.

Q. Would you produce it, please? Do you have it?

A. Yes.

Q. The first paragraph indicates that it has come to his attention that there were rumors circulating in the trade regarding this question of infringement, is that correct?

A. That is what he says. That isn't a fact.

Q. I beg your pardon?

A. That is what he says.

Q. And you say that was not a fact?

A. Well, I don't think there were rumors, and they certainly didn't come from us if there were.

2113 Q. Does Mr. Brasile request, in the last sentence of the paragraph, that you advise him promptly in

writing of the numbers and dates of issuance of the patents held by you which you claim the company, his company, infringed?

A. Yes, he asks that.

Q. Did you ever reply to this letter, Mr. Mojonnier?

A. No, sir.

Q. What is the date of this letter?

A. February 11, 1954.

Q. May I have that letter, please?

A. Yes.

By Mr. Clement: I will ask the Reporter to mark this as Defendants' Exhibit 50 for identification.

(Thereupon said document was marked Defendants' Exhibit No. 50 for identification.)

By Mr. Clement:

Q. When did you receive this letter, if you recall? On or about the date it bears?

A. It doesn't bear our received stamp, so I presume a few days after February 11.

By Mr. Clement: I offer this letter into evidence
2114 as Defendants' Exhibit 50.

By Mr. McCanna: No objection.

By the Court: It may be received.

(Said document, so offered and received in evidence, was marked DEFENDANTS' EXHIBIT NO. 50.)

By Mr. Clement:

Q. Mr. Mojonnier, do you have with you copies of the patents, the numbers of which appear on your nameplate on the machine?

A. I have a book of a number of patents which I think includes those, yes.

By Mr. Clement: Perhaps we had better mark that book for identification as Defendants' Exhibit 51.

By the Witness: It has some loose material. Let's see what it is.

By Mr. McCanna: Could I see that book? I don't believe I have ever seen it.

By Mr. Clement: Do you have other copies we could use?

By Mr. McCanna: I think I have copies back at the office.

2115 By the Witness: This is a compilation of patents under which we are licensed. There may be some other patents in there too, I don't know.

By Mr. Clement: We will mark it with the understanding that the exhibit that is introduced will contain only the copies of the patents that appear on the notice.

(Thereupon said document was marked Defendants' Exhibit No. 51 for identification.)

By Mr. Clement:

Q. Mr. Mojonnier, I will ask you to refer to that compilation of patents. Are they in numerical order, do you know?

A. I don't believe so. I am not sure.

Q. Will you look at patent 1,687,707?

A. Yes, I have it.

Q. What is the subject-matter of that patent?

A. Machine for making Eskimo pies.

Q. When was it issued?

A. October 16, 1928.

Q. When did it expire?

A. Well, seventeen years after that.

2116 Q. 1945?

A. That would be right, yes.

Q. So it had expired at the time you put this notice on, is that correct?

A. Well, these patents were all in a group.

Q. Is that correct?

A. Yes, that is correct as you stated.

Q. Did you ever make a mechanism covered by this patent?

A. We make to this day a mechanism including some of the features of this patent, yes.

Q. Do the claims of this patent read on that mechanism, in your opinion?

A. Yes.

Q. They do?

A. Yes, our ice cream bar making machine.

Q. Will, you refer to patent 1,687,708?

A. Yes, I have it.

Q. What is the subject-matter of that patent?

A. Another ice cream bar making machine.

Q. When was it issued?

A. 1928.

Q. When did it expire?

A. 1945.

2117 Q. Does it have any relation at all to this filler mechanism?

A. No, sir.

Q. Did you ever make a mechanism covered by that patent in your opinion?

A. Yes, sir.

Q. Do you still make it?

A. We do.

Q. You do?

A. Yes, sir.

2118 Q. Will, you refer to patent 1,725,562, please?

Perhaps it would be easier, Mr. Mojonnier, just to take them as they come rather than take them numerically.

A. I have patent 1,725,562.

Q. What is the subject-matter of that patent?

A. It is a clutch.

Q. When was it issued?

A. August 20, 1929.

Q. When would it have expired?

A. 1946.

Q. Will you take the next one that you have available to you there?

A. Well, there is the Banta patent.

Q. The number, please?

A. 2,305,130.

Q. What is the subject-matter of that patent?

A. A box closing device.

Q. It is still a live patent, is that correct?

A. Yes, sir.

Q. When does it expire?

A. 1958.

Q. Is that incorporated in this mechanism that you make, the filler machine, as illustrated in Plaintiff's

2119 Exhibits 37 and 39?

A. No, sir.

Q. And the next one—excuse me.

Did you ever make a device covered by that last patent?

A. Yes, sir.

Q. The next one you come across, Mr. Mojonnier.

A. Well, do you have 1,693,706?

Q. No, I do not. I don't believe that appears on the name plate.

A. Maybe it doesn't. It is a spring latch that we used, but don't use now. I think we have a license under it, but we are not using it.

Q. No, it is not on the notice.

What is the next one?
A. 1,763,685.
Q. Correct. What is the subject?
A. Work holder, part of an ice cream bar making machine.
Q. When was it issued?
A. June 17, 1930.
Q. And it expired in 1947, is that correct?
A. That is correct.
Q. Is that mechanism incorporated in this Plain-
2120 tiff's Exhibit 37 or 39?
A. No, sir.
Q. The next one?
A. 1,787,773.
Q. The subject-matter?
A. It is a wrapping mechanism for ice cream bars.
Q. When was it issued?
A. January 6, 1931.
Q. It expired in 1948?
A. That is right.
Q. Does it cover anything that would be involved in these filler machines?
A. No, sir.
Q. The next one.
A. 1,869,090.
Q. Yes.
A. July 26, 1932.
Q. What is the subject-matter?
A. It is an ice cream bar making machine.
Q. When did it expire?
A. 1949.
Q. Does it relate to a mechanism or subject matter involved in this filler mechanism in suit?
A. No, sir.
2121 Q. The next one.
A. 1,869,090.
Q. Yes.
A. Is that the one I was just talking about?
Q. Yes, I think we just talked about that.
A. I am sorry. Next, 2,094,769.
Q. Yes. What is the subject?
A. Ice cream bar making machine, October 5, 1937.
Q. And it expired?
A. 1954.
Q. The next one?

Does that cover a mechanism involved in this filler?
A. No, sir.
Q. The next one?
A. 2,101,570, December 7, 1937.
Q. Expired?
A. 1954, December 7.
Q. Subject?
A. Ice cream bar making machine.
Q. Is that mechanism included in this filler?
A. No, sir.
Q. I think there are two left. Do you have 1,931,787?
A. No, apparently I don't have that one.
2122 Q. Do you have—well, judging from the number of the patent, one million, nine thirty-one, since the two million numbers have expired, that would be an expired patent also?
A. That group of patents were an ice cream bar maker.
Q. Do you recall whether that was a wrapping mechanism?
A. It is probably—probably it was one of the group. There were a lot of patents on this ice cream bar maker.
Q. It was not related to the filler?
A. No.
Q. Do you have the last one, 1,763,685?
A. Yes, I have that.
Q. What is that subject?
A. It is called a work holder. It is part of an ice cream bar making machine.
Q. Issued?
A. 1930.
Q. Expired?
A. 1947.
Q. Does it have any relation to this filler machanism?
2123 A. No, sir.
Q. How many of the eleven patents as listed are now live patents, unexpired?
A. There is only one, the last of the Borcher patents expired last December.
Q. How many of them—I imagine you can't tell, but I was going to ask how many of them were not expired or were expired, either way, at the time you put this plate on the first machine? I have a compilation.
A. Well, we took that license in 1946, again using that

plate wording at that time. If your figures are correct, all but two were live at the time we took the license out.

Q. My question related to: When you first put out the machine with the name plate on it, how many were expired at that time?

A. Six.

Q. And none of them related to the machine, is that correct?

A. That's correct.

Q. Did you ever discuss this patent notice contained in this name plate with any of your employees?

A. I don't believe so.

2124 Q. Did you ever discuss it with Mr. Dawson?

A. I don't believe so. That was my end of the business.

Q. Did you ever discuss it with any customer?

A. I don't believe that ever came up with any customer. I don't believe the name plates have ever been questioned.

Q. Any jobber?

A. No.

Q. It didn't come up during the conversations you had even subsequent to the patent, the suit being filed?

A. I am sure that it did not.

Q. Have you discussed your patent protection since the suit was filed with any of your jobbers or customers?

A. I have very carefully refrained from any discussion other than to tell them exactly the facts as stated by that notice. I have refused to enter into any discussions while this suit was pending.

2125 Q. Mr. Brasile, when did you first become aware of the alleged error in the first patent at issue?

A. Please don't call me Mr. Brasile.

Q. I am sorry. Mr. Mojonnier.

A. I believe I have testified to that—immediately when I saw the patent claims for the first time. I do not know the exact date, but it was a few days after the patent issued.

Q. Who brought the error to your attention?

A. I read the patent and I immediately said, "This does not cover the scope of the invention."

By the Court: Do you want the file records?

By Mr. Clement: Yes.

By the Court: I don't know whether I have any. I had two.

By Mr. Clement: I had the reissue but perhaps—

By the Court: They were both on file, were they?

By Mr. Clement: Yes, they were.

By the Court: They were both here at one time. They were handed back to you.

By Mr. Clement:

2126 Q. The error which you determined was in the original patent was where in the patent, Mr. Mojonnier?

A. The claims weren't sufficiently broad to cover the scope of the invention.

Q. How about claim 1 of the original patent? Is that true of that one also?

A. Well, the invention went beyond claim 1.

Q. I believe you already testified that you submitted an oath in connection with the reissue application and that you recall signing that oath.

Do you recall making this statement in that same oath: "Deponent further states that it was not until after February 2, 1954 when, upon examining claim 1 of letters patent No. 2,667,990 he first appreciated that it contained an immaterial limitation and that he was entitled to claims of the scope of claims 6, 7 and 8."

Do you recall making that statement in the oath?

A. Well, if it is in the oath, then I signed it.

Q. Do you recall making the statement?

2127 A. Then I made the statement, yes.

Q. That statement indicates that claim 1 contained an immaterial limitation.

Do you have a copy of the patent as it originally issued—

A. No, I don't.

Q. —available to you?

A. No.

Q. I will hand you a copy of it, Mr. Mojonnier. That is patent 2,667,990.

By Mr. Clement: Does your Honor have a copy of that?

By the Court: I don't have a copy. I don't think I ever had a copy of the patent as it originally issued except as it appears in the file wrapper. I know I had occasion to refer to it once.

By Mr. Clement:

Q. Will you refer to claim 1?

A. I have it.

Q. My associate tells me that that is Plaintiff's Exhibit 2, the original patent copy, the soft copy.

Would you refer to claim 1, Mr. Mojonnier, and tell
2128 me what is the immaterial limitation contained in that claim as stated in your oath?

A. Well, I am not a patent expert but I believe that what we were talking about there was the clause which says:

"a member extending through said container for interconnecting said solenoid and said valve,"

which I felt was immaterial in view of the disclosure of Figure 5.

By Mr. McCanna: If you Honor pleases, for this witness to be called upon to interpret—

By the Court: No. He just asked him about his own language.

By Mr. Clement: I called on him to interpret his own language, Mr. McCanna.

By Mr. Clement:

Q. That is the immaterial limitation?

A. I believe that is what we were talking about, yes.

By the Court: What is it? I didn't hear it.

By the Witness: Because, your Honor, that says:
2129 "a member extending through said container for interconnecting said solenoid and said valve."

Figure 5 had disclosed another type of construction.
2130 Q. At the time you made this oath, you were very well aware of the construction of the accused machine, is that correct?

A. I was generally aware of it.

Q. Well, you took the machine apart and you measured it and took photographs of it, is that correct?

A. Yes.

Q. Did your decision as to this being an error relate to your having discovered the construction of the accused machine?

A. That could have had some relation. That wasn't the whole thing, not by any means.

Q. What else was involved?

A. Well, I wanted the broadest coverage I could get and I thought that this thing was a lot broader than the claims which were originally allowed indicated. This was more fundamental. This was the first filling machine of this type ever made.

Q. Are you familiar with the fact that the claims were accepted in the original patent after restriction was re-

quired by the Patent Office in the language included in those claims?

A. I have testified that I did not follow the prosecution of that application closely so I didn't
2131 know that.

Q. Are you now aware of the fact that those limitations that you deleted upon the reissue were put in there in order to get the claim allowed?

A. Well, I have heard a lot of discussion on it. I can't say I understand it. I am not an attorney.

Q. But you did understand that those words in that claim were a limitation which you did not think was satisfactory?

A. I think that's right.

Q. Did you regard that limiting language as defining a structure other than the accused—the structure of the accused mechanism in so far as that particular portion is concerned?

A. I don't believe so. I think I felt right from the first time I saw the accused machine that all they did was reverse my valve.

Q. What about the rod extending through the container?

A. And they have a rod extending upward through the container.

Q. Interconnecting?

A. They have another rod interconnecting the valve and the solenoid. They simply reversed my construc-
2132 tion.

Q. Did they have a rod as specified in Claim 1, extending through the container, interconnecting the solenoid and the valve?

A. Well we are getting, again, into interpretation. Their rod was not exactly as the one disclosed in this patent, which was talked about in Claim 1.

Q. I think I asked you before, you are an engineer, aren't you, Mr. Mojonnier?

A. Yes, I am.

Q. In the light of your engineering training, can you answer that question "Yes" or "No", whether they have a rod extending through the container interconnecting the solenoid and the valve?

A. Well, strictly from an engineering standpoint, without reference to the legal end of it, the equivalence, or anything, I would say they do not.

Q. Mr. Mojonnier, I hand you a sheet of paper marked

Defendants' Exhibit 32 for identification which contains Claim 6 of the application for the reissue patent, this being the first claim that was added at the time the reissue application was filed and this being one of the claims which are designated in your oath as satisfactorily cover-
2133 ing the invention and, as we have explained previously, this copy that has been prepared has the portions of the claim which were added to Claim 1 to make this Claim 6, underlined, and the portions which were deleted from the original Claim 1 in the patent were crossed out so that the new language is the underlined language and the old language which was dropped is the language which was crossed out.

Would you refer to that sheet which is primarily for convenience in determining what portions were deleted and what portions were added to make the new Claim 6, and I will ask you if there is anything else in that original Claim 1 which was deleted which you would regard as falling within this term "immaterial limitation" which we have been discussing.

A. Well, the words "the" are deleted in three places. The word "container" is deleted.

2134 Q. Just the words that are an immaterial limitation.

A. The words:

"extending through said container 4" is eliminated. The word "container" is eliminated and the words "to actuate" are eliminated.

Q. Is there anything else that was an immaterial limitation other than what you previously indicated?

A. Oh, I would say not.

Q. The words:

"mounted on said container" had they been deleted?

A. It says:

"a solenoid mounted on said support in fixed relation to said container."

The word "container" has been deleted.

Q. Was "mounting the solenoid on the container" a limitation?

A. Well, I am not sure that I understand all the details of what we are talking about.

Q. We are talking about your oath and the language you used in your oath, Mr. Mojonnier.

A. Well, the oath was prepared by my attorney and I signed it. I believe I testified to it previously.

2135 Q. My question was whether you regard or regarded the language which included the phrase:

"A solenoid mounted on said container,"

as one of the immaterial limitations.

A. Well, I am not sure whether I did or didn't at that time.

Q. But the claim was changed to make the new claim so that the solenoid was characterized as mounted on the container, is that correct?

A. Well, I think that speaks for itself.

Q. What significant thing was added, examining that claim as I have indicated and which you are examining as Defendants' Exhibit 32? What significant thing was added which was not in claim 1 previously?

A. Well, do I understand that the underlined material was added?

Q. That is correct.

A. Well, the words "support"—"to a container mounted on said support."

Q. Just a moment, please. The word "support"?

A. Yes.

Q. Was that a necessary part of the combination

2136 that you were regarding as your patent, as your invention— excuse me.

A. Well, I believe I have testified that even when I signed the oath, I wasn't completely satisfied with these things and I didn't believe that they contained the full scope of what the invention covered.

I think what you are driving at here is a clause was added "supported in fixed relationship to said container."

"solenoid mounted on said support in fixed relation to said container."

Part of that was added.

Q. Why was the word "support" put in the claim, was my question, primarily. Why was that element—

A. To be perfectly honest, I don't know at this time.

Q. Why was that element added?

A. I don't think I know at this time.

Q. Was it added so that you could designate the solenoid in a way which would include the accused structure?

A. I don't believe that was what we were thinking about.

2137 Q. What were you thinking about?

A. Well, we are trying to get these claims to fully cover the scope of the invention.

Q. And also the accused device, is that correct?

A. I don't believe that that was the primary thing. We knew of the accused device. I felt that it had been copied.

Q. Would you be willing to stand on the original patent as it issued in connection with the infringement, the alleged infringement of the accused machine?

A. Aren't you asking me a question that I am not qualified to answer?

2138 By Mr. Voland: If the Court please, I want to object to Mr. McCanna signaling the answers to the witness.

By Mr. McCanna: I resent that, your Honor. I certainly have done nothing of the kind.

By Mr. Voland: Well, I am not lying, your Honor. I have been watching what has been going on and he has been signaling the answers to the witness.

By Mr. McCanna: Anybody can watch me in court. That certainly is not so and I resent it.

By the Court: Well, I haven't seen it. What happens, happens. There are five men on one side and five men on the other. I don't see everything.

By Mr. Clement: I believe there is a question pending. Miss Reporter, will you read the question, please?

By Mr. Voland: I might add that Mr. McCanna directed the witness to answer "No" to the pending question.

By Mr. McCanna: That is a surprise to me.

2139 I don't know why—

By the Witness: It is to me, too.

By Mr. Clement:

Q. Have you answered the question, Mr. Mojonnier?

(Whereupon the question was read as above recorded.)

By the Court: If you don't want him to answer, why don't you object?

By Mr. McCanna: Your Honor, the original patent has been surrendered and the reissue patent has taken its place and the reissue patent has Claims 6 and 7 in addition.

By the Court: Well, I think you are asking for a legal opinion upon a matter on which he hasn't made any affidavits.

By Mr. Clement: Claim 1 is common to both the reissue and the original patents, your Honor.

By the Court: Yes, but he doesn't have to make a

choice. He is just an engineer. The objection is sustained. The objection to the pending question is sustained.

By Mr. Clement:

Q. Mr. Mojonnier—

* * * * *

2147 By Mr. Clement:

Q. I asked you a couple of questions this morning about this. There is one, I think, that we may answer from this compilation. That is, can you tell me from examining this, without going back to your books, how much of the amount which was due on June 1 was amounts owing prior to May 1, or how much of this amount was over 30 days due?

A. I can answer your previous question now. I have checked my records.

Q. Can you answer this last question? How much of that total amount was over 30 days due at the time of June 1st?

I believe there is a penciled notation on the side here where someone has added the amounts which should fall within that category. You can check it if you wish.

If you have a better source for determining that, I would be happy to have you use it.

A. Well, this is just a statement as of a certain date. I would rather give you the data off the books, I think. You folks have a copy of the complete account for the entire period of the contract.

I checked that by telephone at noon time, and sub-
2148 ject to my misunderstanding over the telephone—

Q. Do you recall which question I am asking now?

A. Yes, I understand.

On April 30, 1953, the account stood at $42,549.22.

On April 30, Mr. Brasile and Mr. Blum brought in a check for $15,187.20, leaving a balance after that check of $27,362.02.

The account stood on May 29, 1953, the last entry date for the month of May, at $62,638.90.

Q. My question was, how much of the amount that was due on June 1st was more than 30 days due?

A. You mean more than 30 days old? The terms of this contract were 10 days, not 30 days.

Q. I said 30 days.
A. 30 days old?
Q. Right.
A. Yes. Well, it would appear from this statement, if it is authentic—
Q. Didn't you identify it?
A. It is our statement. I think it is. It would appear that there was $5,334.17 of invoices dated before May 1st, 1953.
2149 Q. That is a little over $5,000?
A. That is the figure I said, $5,334.17.
Q. You referred to a 10 day period in which the payments were to be made. Was there ever any adjustment of that 10 day period?
A. No, sir. We tolerated some longer periods to go beyond that.
Q. Was there any discussion of that 10 day period?
A. Yes. Mr. Blum continually wanted us to extend it, and I continually refused to do so.
2150 Q. Returning, briefly, to the reissue application, Mr. Mojonnier, do you recall when you determined that you were going to file such a reissue application?
A. I can't state as to the exact date. It was some time between the day I examined the patent and the day that the reissue was filed.
Q. Your oath in the reissue application stated that you discovered the error immediately after the patent issued, is that correct?
A. That is correct.
Q. Did you decide to file your reissue application before you filed the suit?
A. I can't state as to the exact times in there. I had a number of conferences with Mr. McCanna in that period. I can't state just when this was decided and that was decided.
Q. Do you recall when you signed the oath which became a part of the reissue application?
A. I don't know at this moment what the date is. The oath is in the record, I am sure.
Q. Mr. Mojonnier, I show you Defendants' Exhibit 8 which is a certified copy of the file wrapper of the reissue patent.
2151 I refer you to page 10 thereof and ask you if that is a copy of the reissue application oath and if it bears the date and if so, what date does it bear?

A. Well, it bears a date and it is the 22nd of February, 1954.

Q. And the suit was filed on the 19th, is that correct?

A. I believe that's the correct date.

Q. Do you now recall whether you had determined whether to file the reissue application before you filed the suit?

A. Well, I stated that I can't say on just what conference what was decided. I know that on the first conference that I had with Mr. McCanna, after I discovered the—after I saw the original patent, that we discussed reissue. I can't say now just what day we decided to do what.

Q. Mr. Mojonnier, to aid your recollection, I hand you a calendar for the year 1954 and ask you on what day does the 19th of February fall?

A. It falls on Friday.

Q. And upon what day is the 22nd of February?

A. Monday.

2152 Q. Do you now recall whether or not the reissue application was prepared or the decision to prepare it was made prior to February 19th?

I call your attention to the fact that the suit was filed on a Friday and the reissue application oath was signed on a Monday.

A. Well, I believe it was decided to do it before the 19th. I believe it was in a conference some time in that three week period, but I am not sure. I have no records of it to indicate the exact day.

2153 Q. I believe that we have already had your testimony to the effect that the reason for filing the reissue application was the fact that it had an error therein and that the reason that the error occurred was—or the character of the error was that it was an error on the part of your attorney, is that correct?

A. I believe what we stated was inadvertence on the part of my attorney.

Q. Well, of course, the oath recites specifically what you felt was the error, but, generally speaking, it was an error on the part of your attorney?

A. Well, I hadn't gotten across to my attorney, apparently, what the scope of this invention was.

Q. Were you familiar with the claims which were accepted by your attorney in the original application?

A. No, sir.

Q. Well, you were familiar with them eventually, were you not?

A. After I saw the patent, I was in an embarrassing position on that original application. I—

Q. Mr. Mojonnier—

A. All right.

2154 Q. Did you discuss the error with your attorney prior to the filing of the reissue application?

A. Yes, between the time I saw the patent and when we filed the reissue application, I did, yes.

Q. And did you discuss the character of the accused machine at the same time.

A. Not at the same time.

Q. Did you discuss the character of the accused machine with your attorney prior to the filing of the patent, the reissue patent application?

A. In general.

Q. Did you discuss it prior to the filing of the lawsuit?

A. In general.

Q. So, you must have discussed it prior to the filing of the reissue application?

A. Yes.

By Mr. Clement: Your Honor, we have several witnesses who have been sitting for some days waiting to testify. I would like to request permission to withdraw Mr. Mojonnier and put these witnesses on, if Mr. McCanna is agreeable.

By the Court: Any objection?

2155 By Mr. McCanna: Well, I am agreeable to anything that will move the case along, your Honor. I have no objection. I have no objection.

By the Court: Very well.

By Mr. Clement: Will you step down, Mr. Mojonnier?

(Witness withdrawn.)

RICHARD HAHN, called as a witness on behalf of the Defendants, having been first duly sworn, was examined and testified as follows:

Direct Examination by Mr. Voland.

Q. Will you state your full name, please?
A. Richard Hahn, H-a-h-n.
Q. H-a-h-n?
A. That is correct.
Q. Where do you live, Mr. Hahn?
A. Colonial Trailer Park, DesPlaines, Illinois.
Q. What is your present occupation?
A. I am an apprentice electrician.
2156 Q. You appeared here in response to a subpoena?
A. That is correct.
Q. Are you acquainted with Maurice J. Brasile, Mr. Hahn?
A. Yes, I am.
Q. In January of 1954, were you in the employ of Purity Pack Corporation?
A. Yes, I was.
Q. One of the defendants in this suit?
A. Yes.
Q. What were your duties at that time?
A. Well, as I recall, at that time I was—my duties were calling on jobbers and setting up these jobbers. I don't believe I was—I don't believe I was calling on the dairies directly at that time.
2157 By Mr. Voland: Please try and keep your voice up, Mr. Hahn, so we can all hear you.
By the Witness: Yes.

By Mr. Voland:

Q. Now in that month, January, 1954, if you recall, had the Purity Pack Corporation just commenced to make shipments on their machines, the U. S. Dairies machines?
A. Yes, I believe it was sometime in January.
Q. And you are referring now to the accused machine that stands here in court, which I think is Plaintiff's Exhibit 40?
A. That machine there (indicating).
Q. Do you know Mr. H. T. Sewell of Atlanta, Georgia?
A. Yes, I do.

Q. Did you call on Mr. Sewell in January of 1954?
A. Yes, I did.
Q. And what was the purpose of that visit?
A. Well, we were trying to set him up as a jobber.
Q. As a jobber for Purity Pack Corporation?
A. That's right.
Q. Did you at that time have a conversation with
2158 Mr. Sewell?
A. I did, yes.
Q. After that conversation, what did you do, if anything?
A. Well, I made a written report of that conversation immediately afterward and I mailed it to Mr. Brasile in his office at Woodstock, Illinois.
Q. Was that report made the same day that the conversation took place?
A. Yes.
Q. At that time, were you working on a commission basis or on a salary basis?
A. I was working on a salary basis, as opposed to commission.
Q. Was it your regular practice to make reports to the home office of your activities?
A. Yes, that was my practice and I believe it was the practice of the other men who called on these jobbers to make these reports of progress.
Q. Now was the report of your interview with Mr. Sewell made pursuant to that practice?
A. Yes, that's right.
Q. Well, was it the regular course of business—I think you have said it was—for men who were calling on
2159 jobbers to make such reports?
A. As I said, we made these reports, from time to time. it was normal to do it, I mean.
By Mr. Voland: I will ask the Reporter to mark this document as Defendants' Exhibit—is it No. 53 for identification, Mr. Houghteling?
By Mr. Houghteling: 54.
(Thereupon said document was marked Defendants' Exhibit No. 54 for identification.)

By Mr. Voland:

Q. I show you, Mr. Hahn—
By Mr. McCanna: Your Honor, if this is a report of a conversation had with this jobber down there who is not

a party here to the suit, isn't that hearsay? Isn't that hearsay evidence, just as though you are stating it in words? It means the same thing, practically, if it is a report of a conversation.

By Mr. Voland: I am attempting to lay the foundation, if the Court please, for the reception of this docu-
2160 ment under the Federal Shop Book Act as a report made in the regular course of business. I think the cases which have interpreted that statute, have applied it to reports of this kind.

By the Court: It wouldn't be otherwise admissible. Do you want to put it in for the truth of what is stated therein?

By Mr. Voland: Yes, if the Court please, I do.

By the Court: The objection is sustained. Even if you do qualify it under the Shop Book rule, it is not admissible.

By Mr. Voland: May I nevertheless proceed? May I lay the foundation to qualify it under the Shop Book rule?

By the Court: You can, but it won't get in here.

By Mr. Voland: Very well, sir.

2161 By Mr. Voland:

Q. I show you, Mr. Hahn, this document which already has been marked in this record as Defendants' Exhibit 54 for identification, consisting of one page, and ask you if that is the report to which you have just referred.

A. Yes, it is.

Q. Will you please repeat that answer so that the reporter can hear it?

A. Yes, this is it.

Q. May I have it, please?

(Handing document to counsel.)

By Mr. Voland:

Q. Do you know, of your own knowledge, Mr. Hahn, whether this report was written on the date which it bears?

A. Yes, I believe it was, yes.

By Mr. Voland: And we offer this report as Defendants' Exhibit 54 in evidence.

Any objection, counsel?

By Mr. McCanna: Yes, I am objecting. I am objecting, your Honor.

By the Court: The objection is sustained.

By Mr. Voland: If the Court please, I think there
2162 is another basis for the admissibility of that document.

I would like to suggest to the Court that I am also trying to lay the foundation for the actions which Mr. Brasile took, and I think this witness will testify that he mailed this—or, he has already testified that he mailed this report to Mr. Brasile.

Now, this was one of a number of communications which Mr. Brasile received from the trade in January, before this patent issued, concerning rumors and charges of patent infringement on the part of the Brasile group of corporations.

I think it is relevant to show what information was known to him at the time that he did the things to which he will later testify.

By the Court: Well, now, you just think about that a little while.

By Mr. Voland: Very well.

By the Court: This gentleman who is an employee of the same company that Mr. Brasile is employed by,
2163 who is down somewhere down in the south and talks to Tom, Dick and Harry, and Tom, Dick and Harry say so-and-so and so-and-so and so-and-so, if you want to put that in, all that you prove is that this man heard Tom, Dick or Harry say something.

It doesn't prove anything at all. It isn't admissible.

By Mr. Voland: This purports to refer to a conversation that was had with Mr. Mojonnier. That is all that this letter refers to. That is to say, Mr. Hahn's report is what Mr. Sewell told him of his conversation with Mr. Mojonnier.

By the Court: Then it is hearsay, pure hearsay, and inadmissible.

By Mr. Voland: And the witness, if the witness is allowed to testify—Mr. Sewell is not available to us, if the Court please.

By Mr. McCanna: Oh, if your Honor please,—

By the Court. Well, you could have taken his deposition.

By Mr. Voland: I beg your pardon, sir?

By the Court: You could have taken his deposition.

By Mr. Voland: We couldn't afford to take his
2164 deposition, if the Court please.

By Mr. McCanna: May I say this, your Honor, that Mr. Sewell was served with a—

By Mr. Voland: Just a moment, Mr. McCanna.

I just want to say this, if you are going to say what I think you are going to say—I am going to ask the Court to permit me to state the whole story and not just half of the story.

2165 By Mr. McCanna: Go ahead. You don't know what I was going to say.

By Mr. Voland: I think I do.

I say, I think there is an independent guarantee, if the Court please, of the truthfulness of the document. There was no suit pending. There was no reason why this witness should send home a report of a conversation which had not occurred, why he should send home a false report at that time. The witness is beyond the process of the court. He lives in Atlanta, Georgia. It is not possible for us to bring him in here. We couldn't afford to bring him in.

By the Court: I can't see any theory at all for letting it in.

By Mr. Voland: Very well.

You may cross-examine, Mr. McCanna.

By Mr. McCanna: No cross-examination.

(Witness excused.)

By Mr. Voland: Mr. Moravec, please take the stand.

2166 ROBERT M. MORAVEC, called as a witness on behalf of the Defendants, having been first duly sworn, was examined and testified as follows:

Direct Examination by Mr. Voland.

Q. Will you state your name, please?

A. Robert M. Moravec.

By the Court: Robert?

By the Witness: M. Moravec.

By the Court: Spell it, please.

By the Witness: M-o-r-a-v-e-c.

By Mr. Voland: Please try to keep your voice up, Mr. Moravec.

By Mr. Voland:

Q. What is your present business or occupation?

A. Sales and service of sewing machines.

Q. By what company are you employed?

A. Singer Sewing Machine Company.

2167 Q. If I haven't already asked you, where do you reside, Mr. Moravec?

A. 210 Dean Street, Woodstock, Illinois.

Q. Were you at one time in the employ of U. S. Filler Corporation?

A. Yes.

Q. When did you go to work for that company, if you now recall?

A. When they first started in business.

Q. Was that about October of 1952?

A. Yes.

Q. From the employ of that company, did you go to the employ of U. S. Carton Forming Corporation?

A. Yes.

Q. And were you in the employ of U. S. Carton Forming Corporation so long as that company was handling the Mojonnier-Dawson filler?

A. Yes.

Q. Sometime later did you go to work for U. S. Dairies Sales Corporation?

A. Yes.

Q. Do you recall when that was?

A. October, let's see—

Q. Approximately is good enough, Mr. Moravec.

2168 A. Oh, I think it was October.

Q. Of what year?

A. 1952—

By the Court: What year?

By the Witness: '52 I believe, oh, 1953.

By Mr. Voland:

Q. 1953, wasn't it?

A. 1953, yes.

Q. When did you leave the employ of U. S. Dairies Sales Corporation?

A. In October of 1953—or wait a minute—October of 1954.

Q. 1954, sir?

A. 1954, yes.

By Mr. McCanna: I think the witness should answer the questions, your Honor.

By Mr. Voland: They are prelimary matters, if the Court please. I am merely trying to get along here.

By Mr. McCanna: All right.

By Mr. Voland:

Q. During the period, Mr. Moravec, when you were working for U. S. Filler and U. S. Carton, which I understand is the period from about October of 195-
2169 through at least June of 1953, what were your duties?

A. Sales and service.

By the Court: Now wait a minute. Read that question, please.

(Whereupon the question was read as above recorded.)

By the Court: All right. Go ahead.

By Mr. Voland:

Q. Will you repeat the answer?

A. Sales and service.

Q. Now are you referring to sales and service of some particular article or machine?

A. Yes.

Q. What machine?

A. The Mojonnier-Dawson.

Q. Is that the machine which is present in court here as Plaintiff's Exhibit 39, Mr. Moravec?

A. Yes, with the exception of the stapling gun. I mean, it was principally the same.

Q. Now would you tell us, Mr. Moravec, how your time was divided as between sales and service while you were an employee of those corporations?

A. Mostly service.

Q. Mostly service?

2170 A. Yes.

Q. When you speak of service, what are you referring to? What did you actually do?

A. Well, we had to install the machines more or less, and show the dairymen how to operate it and repair it. I mean, so that it would work.

Q. If there were any complaints of breakdowns or anything of that kind, would you be sent out in the course of your duties to attend to them?

A. Yes.

Q. Did you make many such visits during the time that you were employed by U. S. Filler and U. S. Carton?

A. Very many.

Q. Would you explain to the Court, please, how extensively you traveled in connection with these service calls?

A. Well, I had bought a new car, and I put approxi-

mately 10,000 miles on it the first six weeks I had it, just solely in service work.

Q. Try to keep you voice up, please.

A. On service work, and on many occasions I would be called from one place to the other, and sometimes it was quite a while before I even got home.

2171 Q. Would you receive calls while you were in the field from the home office directing you to go to some other place for a service call?

A. Yes.

Q. During the time that you worked for U. S. Filler and U. S. Carton, how much mileage did you put on that car you referred to in service work?

A. About 80,000 miles.

Q. I take it then that you observed in the field the difficulties which the dairymen experienced with the Mojonnier-Dawson filler?

A. Yes.

By Mr. McCanna: Your Honor, I object. It seems to me he ought to, instead of telling the witness what the answer should be, he ought to ask what he did.

By the Court: It is leading.

By Mr. Voland:

Q. Would you tell us, please, Mr. Moravec, what were the most common difficulties which you encountered in the field with that machine?

A. They couldn't seal the tops of the cartons, and they would leak out of the edge and they would leak
2172 around the staple, and a lot of the parts that we had wouldn't fit. They were hard to interchange, one part that we would have to replace, and in some conditions, why, it just seemed as though the machines just didn't have a very good enough inspection or test before they left for the dairy because when I would get there, why, you would almost definitely have to have a file or something to keep the machine so that it would actually, so you could actually install it without too much difficulty.

Q. This first problem that you have described about the leaking cartons, is that what is known as top leakers?

A. Yes, sir.

Q. What is the term that is used to describe, if any, the leaking around the staple?

A. Staple leakers.

Q. Did you have occasion to discuss with Mr. Mojonnier the service problems that you had?

A. Yes.

Q. Did you do that on just one occasion or were there many such occasions?

A. Many.

2173 Q. Did you spend any time in Mr. Mojonnier's plant discussing these matters with him?

A. Yes.

Q. Did you ever have occasion to demonstrate to Mr. Mojonnier any of the particular problems that you had?

A. Yes.

Q. Tell us about that, please, in your own words.

A. Well, at one time I mentioned to, well, everybody in the whole organization, that we had to cure the top leaker on the carton because everywhere you went that was the big complaint. Mr. Mojonnier didn't think that it was, I mean his impression was—

By Mr. McCanna: I move to strike out what Mr. Mojonnier thought.

By Mr. Voland:

Q. Just tell us what you told him, Mr. Moravec.

A. Yes. But, so, he run some cartons through. I told him that, to show me that it didn't leak, and so he run about four or five, and there were just little drops on the corner, and he didn't think that—well, he said they wouldn't—

2174 Q. What did he say?

A. He said they wouldn't complain about that or shouldn't. That that was a trivial thing.

Q. You mean you ran cartons through the machines in Mr. Mojonnier's plant?

A. Yes.

Q. Did you fill them with water or milk?

A. Water.

Q. And you showed him they were not sealed because they leaked at that time, is that right?

A. Yes.

Q. Did you also discuss these problems with Mr. Brasile?

A. Yes.

Q. From time to time?

A. Yes.

Q. Did you make any specific suggestions to Mr. Mojonnier as to what you thought might be done to correct any of these problems that you ran into?

A. Yes.

2175 Q. Tell us about one such suggestion, Mr. Moravec.

A. Well, I suggested that they knurl the block, and then that they brace it because it had a tendency, after it was used for several times, to shift and be loose and apply the pressure on one corner of the block and it would take the other pressure off.

Then the staple leakers, I mentioned that a round wire staple, because Ex-Cell-O Corporation used a round wire staple, that they must have an advantage there. I brought up the matter that a round wire staple, I thought, would stop the leak around the staple, and we tried it on our own and it worked.

Q. Was either of those suggestions ever adopted by Mr. Mojonnier, during the time that your employers were buying and selling his machine?

A. I think he knurled the block, but as far as the staple, there was nothing done on that.

Q. Did Mojonnier-Dawson send servicemen with you out into the field?

A. Only one occasion.

Q. Did Mr. Mojonnier state any reason to you as to why he was unwilling to make any changes in the machine?

2176 A. Well, he said that he had tooled up and that we neded, we wanted production, and he couldn't change it because it would handicap the production of the machine.

Q. What was your experience in the field with replacement parts sent from the factory, Mr. Moravec?

A. Well, they were very seldom that you could put it right together. You had to fit it yourself in the dairy with a file or—

Q. How would you do that? Would it require any outside help or could you handle it yourself?

A. Well, no, we could handle it ourselves or on some occasions we had—no, not that I can recall offhand.

By Mr. McCanna: I can't hear you.

By the Witness: No, we did most of it ourselves. I mean I would do it all myself.

By Mr. Voland:

Q. Did you have occasion, Mr. Moravec, to install a machine at the Southern Belle Dairy in Somerset, Kentucky, for Purity Pack Corporation?

A. Yes.

Q. Do you know when that was?

A. Between January 2nd and the 18th.

2177 Q. After that machine was installed, did you have occasion to go back again for service to the machine?

A. Yes.

Q. Do you know when that second visit took place?

A. The 18th.

Q. How do you fix that date?

A. From my expense book.

Q. Did you make that second visit because of some complaint that had been received about the condition of the machine, if you recall?

A. Yes. It was to be put in operation at that time.

Q. At what time?

A. The 18th we were supposed to run milk on it with the dairy.

Q. When you got there on the 18th of January, in what condition did you find the machine, Mr. Moravec?

A. Well, the valves and everything were in the bowl and it was dug into. It was taken apart.

Q. You say the valves were in the bowl?

A. Yes.

Q. How long did it take you to get the machine back in operation, if you recall?

A. Well, as near as I can recall, we got it in operation, oh, within a day, a day and a half.

2178 Q. On the occasion of that visit, Mr. Moravec, did you have a conversation with the plant manager at the Southern Belle Dairy?

A. Yes.

Q. Who was present at that conversation?

A. Oh, well, there was some of the dairy help there, and him and I, and I think two of the saiesmen were there.

Q. Do you remember the name of the plant manager?

A. No.

Q. Can you tell us what was said at that time, the time of that conversation, Mr. Moravec?

A. Well, it all—

By Mr. McCanna: I object, your Honor, being hearsay evidence that he is apparently going to give here.

2179 By Mr. Voland: If the Court please, I think that this particular conversation certainly comes within the res gestae rule. This was almost immediately after Mr. Mojonnier had left the plant. Mr. Mojonnier testified he was there on the 16th. He has a report of this visit of his which he said was dated the 18th. Mr. Moravec coincidentally arrived on the 18th of January.

By the Court: Well, now, what is your question?

By Mr. Voland: The question is to state the conversation.

By the Court: With whom?

By Mr. Voland: With the plant manager of the Southern Belle Dairy.

By the Court: Sustained.

By Mr. Voland: You may cross examine, Mr. McCanna.

By Mr. McCanna: No cross examination.

(Witness excused.)

By Mr. Clement: Mr. Botts, will you take the stand, please.

2180 JOSEPH M. BOTTS, called as a witness on behalf of the Defendants, having been first duly sworn, was examined and testified as follows:

Direct Examination by Mr. Clement.

Q. Will you state your full name, Mr. Botts?

A. Joseph M. Botts.

Q. Where do you live, Mr. Botts?

A. 933 Wheeler Street, Woodstock, Illinois.

Q. By whom are you employed?

A. I am at present employed by the State of Illinois, Highway Department, Division of Maintenance.

Q. What was your previous occupation?

A. I worked for my brother, Botts Welding Service, at Woodstock, Illinois, as machinist and welder.

Q. What were your duties at that time?

A. I made machine parts, repaired parts and things in a job shop where customers brought in work and ordered done.

Q. Do you know Mr. Maurice Brasile?

A. I know him from contact made when I was making a machine for him.

2181 Q. When was this?

A. Well, he first approached me in early December, 1952.

Q. What was the character of the machine you just referred to?

A. It was an automatic filling device for dairy cartons.

Q. Do you see an exhibit, a physical exhibit in the court room, which resembles that device?

A. I do.

Q. Can you see this identification number?

A. D-33.

Q. That is the machine that has that number?

A. That is the machine.

Q. Would you tell me more fully what the purpose of this machine was, if you know?

A. Well, to the best of my knowledge it was to fill cartons, open the cartons, fill them, seal them, ready for packaging for delivery. I didn't have to work on any part of the filler. The filler they had. All I had to do was make it move along automatically.

Q. You say they had the filler?

2182 A. To the best of my knowledge. They said that they had a filler and timing device, and all I had to do was make it work in conjunction with that, and they used that tank up above for it.

Q. Did you ever actually operate the filler portion of this machine or see it operated?

A. No, I did not.

Q. What was the principal purpose of the horizontal bars that you see running across the machine, if you recall?

A. The lower bar?

Q. No, the two upper horizontal bars. These horizontal bars (indicating).

A. The upper bar there was the opener and closer.

Q. The uppermost horizontal bar was what?

A. For opening and closing the carton.

Q. And the lower?

A. Was to move the carton along as it filled.

Q. And how did this movement of the cartons occur?

A. That is worked from a cam down below.

Q. How long did you work on this machine?

A. Pretty close to 500 hours.

Q. In terms of months?

A. Well, I would say from December until June. That

was off and on. I had other duties to do besides just
2183 working on this machine.

Q. Did someone else work with you on the machine?

A. Mr. Richardson and Mr. Brasile at times.

Q. How often was Mr. Richardson with you when you were working on the machine, roughly?

A. Well, a good share of the time. Not all of the time, but a good share of the time.

Q. How often was Mr. Brasile with you?

A. He was in occasionally to see how the progress of the machine was going on.

Q. When you started the construction of this machine, did you have working drawings?

A. No, sir, we did not.

2184 Q. Where did you get the ideas for the construction of the machine?

A. Well, Mr. Brasile came in the first time. He ordered a plate made, 18 by 48 inches, and that is what we started from. Then we had to cut a hole in it. Later we patched it up. It has been a process of error or touch and-go, as you go along, all the way through.

Q. Is that plate you refer to the top of this table?

A. The top of that table, 18 by 48, high rolled steel.

Q. I am referring to the table which is part of Defendants' Exhibit 33.

What was the next step?

A. The next step, we put on a cam to raise an elevator to raise the carton up to the filling tube.

Q. Was that a pedestal?

A. I would say it was a pedestal.

Q. Was that satisfactory?

A. No, it was not. We removed it later.

Q. What did you do then?

A. Then we started trying to raise it on a slide basis, going up on a slide.

2185 Q. You tried to raise what?

A. The cartons as they went along.

Q. Up into association with the dispensing nozzle of the filler?

A. That is right.

Q. When did you put the tank on, if you recall?

A. Oh,—

Q. Or did you put it on?

A. Yes, I put it on. It was about half way through, I would say. I would say about maybe two or three months after we started on it. That was so we could get a line-up in conjunction with the way the cartons stopped.

Q. Did you make any other modifications in the machine after you tried raising the carton?

A. Yes. We had a cam that would move the spout up and down, the filler tube.

Q. A cam?

A. A cam, yes. I believe it is still on there, I don't know. I can't see it from here.

Q. You say the filler tube. Was there a sleeve on this barrel projecting downwardly?

A. Yes, there was a sleeve on there. That is the sleeve.

2186 Q. The sleeve I have in my right hand, resting on the machine, that is the sleeve?

A. That is the sleeve.

Q. That was designed to move in this fashion, up and down on this barrel?

A. That is right.

Q. What moved that?

A. There was a cam on the back of the cross shaft below that moves an arm up and down there. I was told not worry too much about the filling time because they had a timer. I don't know whose timer or anything about it. I never seen it.

Q. The portions of the mechanism you are now referring to are not on the machine at the present time?

A. There is a portion of it that isn't there, yes, sir.

Q. That would be the arm that ran out to the sleeve, for example?

A. That is right. It was a forked affair that went around the sleeve.

Q. Mr. Botts, I show you a photograph marked Plaintiff's Exhibit 71, and ask you if you recognize the machine depicted in that photograph?

A. Yes, sir.

2187 Q. What machine is that?

A. That is the one I built.

Q. The one you have just been describing?

A. Yes, sir.

Q. Does that represent the structure of the machine at the time you finished your work on it?

A. Very close to it, yes, sir. I can't see any changes.

That was about the way it was when it left our place of business.

Q. I refer you to the filling mechanism. Can you tell whether or not from that photograph it was that complete when you last saw the machine when it left your place of business?

A. That was complete as far as I worked on it, yes. I mean, everything is in there.

Q. Can you tell anything more about the fact that there is a sleeve there that is moved by the arm that you described?

A. Yes, you can see the fork that goes around it.

Q. But you never saw the filling mechanism actually operating as far as dispensing liquid is concerned?

A. On here?

Q. Yes.

A. No, sir.

2188 Q. When did it leave your place of business, the machine?

A. I would say June.

Q. June of what year?

A. 1953.

Q. Did Mr. Richardson show you any prepared drawings, formal drawings, at the time he started working with you on this?

A. No, he did not. All drawings and sketches was made in my presence, and either I made them or he made them.

By Mr. Clement: I will ask the Reporter to mark four sheets of pencil sketches as Defendants' Exhibits 55, 56, 57 and 58 for identification.

(Thereupon said documents were marked respectively Defendants' Exhibits Nos. 55, 56, 57 and 58 for identification.)

By Mr. Clement:

Q. Mr. Botts, I hand you a rough pencil sketch, marked Defendants' Exhibit 55 for identification, and ask you if you have seen that before, if you recall.

2189 A. Yes. That is one of the gates of the walking beam that we made.

Q. Have you seen the drawing, the sketch, before, do you recall?

A. No, I can't recall that I ever seen it. It could have been made there.

Q. Is it the same type of sketches that were made at the time you were constructing this machine generally?

A. I think that possibly was made after we had made the machine.

Q. Is there a date on the sketch, Mr. Botts?

A. It is March 8, 1953.

Q. I show you Defendants' Exhibit for identification 56, and ask you if you have seen that sketch before, if you recall?

I also ask you, Mr. Botts, have I ever shown these sketches to you before?

A. No, you have not.

I don't know as I have ever seen some of these sketches. I don't recall making this sketch, but I do recall figuring out that cam action for the stapler.

Q. What is the date on that sketch?

2190 A. March 3, 1953.

By Mr. McCanna: Which number is that?

By Mr. Clement: That was Defendants' Exhibit 56 for identification.

By Mr. Clement:

Q. I show you Defendants' Exhibit 57 for identification, and ask you if you have seen that before, if you recall?

A. Yes, that is part of our pusher arm for dispensing.

Q. Do you remember the sketch itself or do you just remember the part illustrated?

A. I remember the part. I don't remember the sketch.

Q. And this I have never shown you before, have I?

A. No, you have not.

Q. I show you Defendants' Exhibit 58 for identification, and ask you the same questions relative to that.

A. I don't think this is the sketch I seen, but I did see a sketch similar to that that we made up at the shop there.

I didn't make the stapler myself, and they brought
2191 the sketch in and told me that is what it would look like, and that I had to figure some way of mounting them and making them work.

Q. What is the date on that sketch?

A. It is March 1st, 1953.

By Mr. McCanna: If your Honor please, it seems to me that this testimony is entirely immaterial to the case. It deals with staplers and other things. It has nothing to do with the filler, and furthermore, the witness doesn't seem to know anything about these sketches.

By Mr. Clement: Your Honor, I think it is self-evident that Mr. Botts has a great familiarity with the machine which has been introduced and the construction of it and the history of it, and particularly as to whether or not it was built for the purpose of making a filler or an automatic mechanism to carry the cartons across.

I think that is a very significant point in this whole case.

By the Court: Well, I have heard what he said.

2192 I didn't hear any objection. I just heard an observation.

By Mr. McCanna: I move to strike out that testimony.

By the Court: Denied.

By Mr. Clement:

Q. I believe I didn't ask you the date of Defendants' Exhibit 57 for identification, Mr. Botts. Could you tell me what date appears on that?

A. March 1st, 1953. That is on the valve.

Q. And is it your recollection, Mr. Botts, that the drawings that you used in constructing Defendants' Exhibit 33 were generally similar to these rough sketches that I have just shown you, Defendants' Exhibits—

A. Very similar to them, yes.

2193 By Mr. Clement:

Q. 55 to 58?

By Mr. McCanna: I object to that as a leading question. Let him compare it—

By the Court: What is that?

By Mr. McCanna: I say, I object to it as a leading question, as to what this drawing shows. The drawings speak for themselves.

By the Court: Well, he may show them to him.

By Mr. Clement:

Q. Mr. Botts, I now show you some photostatic copies showing some drawings which have been introduced into this case as Plaintiff's Exhibits 72, 73, 74, 75, 76, 77 and 78 and 79, and ask you if you had these drawings at the time this machine was constructed.

A. Did I have these drawings?

Q. Yes, sir.

A. At no time.

Q. Would you look at them, please?

By the Court: He may have misunderstood you.

By the Witness: I had no drawings of any kind to work with.

By Mr. Clement:

2194 Q. At the time the machine was constructed, in your shop?

A. At our shop—in fact, the invoice is so noted so that there wouldn't be any kick back.

Q. Have you ever seen those drawings?

A. No, I haven't. I don't even know what they pertain to.

By the Court: Are you sure that he is not confused by the fact that these are photostatic copies? Make sure that he isn't.

By the Witness: I have seen photostatic copies before, sir, your Honor.

By Mr. Clement:

Q. You have? You have seen photostatic copies?

A. Not these. I have seen photostatic copies but not this group.

Q. Well, let us clarify that, now.

Have you ever seen the originals of the drawings represented by those photostatic copies?

A. No, I have not seen them.

Q. Now, you said something about having seen photostatic copies. Have you seen those photostatic copies or ones identical with those?

A. No, I have not. I thought his Honor was re-
2195 ferring to the fact that I hadn't seen photostatic copies before and that was mixing me up. I am sorry.

By the Court: Well, I was. You are right.

By Mr. Clement:

Q. Mr. Botts, I hand you a drawing marked Plaintiff's Exhibit 70. This happens to be the original which is not so marked, but the original of the exhibit was marked Plaintiff's Exhibit 70.

While we are looking for that, I will hand you this document.

Now, we have the original, Plaintiff's Exhibit 70, and I hand it to you, Mr. Botts, and ask you to rather carefully examine that one and tell whether or not you have seen that drawing, which that photostatic copy purports to represent.

As a matter of fact, I am holding the original of it in my hand.

A. No, I have never seen it, but there are some things that look familiar on here, on this drawing.

Q. What does this appear to be related to?

A. Well, this seems to be a cam that we worked on for underneath for pushing, for the valve mechanism.

2196 Q. Does it show any of the other parts that you experimented with during the trial and error period when you were completing this machine, Defendants' Exhibit 33?

A. There are a lot of things similar, yes. Yes, there is an eccentric cam and pusher that I can recognize, and the pusher we did away with.

Q. Is the pedestal you referred to which was tried for a while and abandoned shown on here?

A. Yes. Exhibit B, I believe it is, on the eccentric cam. The cam is B and D is the pusher.

Q. Is there a part at the very bottom of the drawing which you recognize, in the center?

A. Yes. That is even to the bearing I used as the roller.

Q. Is that the pedestal in that particular figure, or do you recognize it?

A. It looks very similar to it, yes.

By Mr. Clement: That is all, Mr. Botts.

By Mr. McCanna: I have no cross-examination.

(Witness excused.)

By Mr. Clement: Mr. Richardson, will you take the stand, please.

2197 JACK B. RICHARDSON, called as a witness on behalf of the Defendants, having been previously sworn and examined, testified further as follows:

Direct Examination by Mr. Clement.

Q. Are you the same Mr. Richardson who previously testified in this case?

A. Yes, sir.

By the Court: What is your first name?

By the Witness: Jack B.

By Mr. Clement:

Q. Mr. Richardson, referring to this Defendants' Exhibit 33 that is present here in the court room, I believe there was some previous testimony of yours concerning its construction and also concerning drawings which were purporting to relate to that exhibit.

I show you, Mr. Richardson, a photostat of an original drawing, the photostat being marked Plaintiff's Exhibit 75 for identification and I refer you to the date which appears in the right-hand corner next to the word "date."

Will you read that date, please?

2198 A. 3/21/53. Do you want the date below it?

Q. No. I am only referring to that date alone.

I believe both on your deposition which was taken earlier and before trial and at the time of your testimony during this trial, you indicated that you weren't quite certain why that date was on that drawing, is that correct?

A. I think I made that statement, yes.

Q. Or words to that effect?

A. Yes.

Q. Have you had an opportunity to reconsider what appears to be the significance of that particular date?

A. Well, I think it goes back to the same—I said once before, it dates back to the time that I made the drawings, the original sketches and drawing of the whole proposed unit.

Q. When you say "the whole proposed unit," to what do you refer?

A. Well, to drawing that I had at the same time we were making this 33, D-33 machine.

Q. Well, to what does that particular drawing that we are now discussing, Plaintiff's Exhibit 75, refer?

2199 A. That is the body of a float valve.

Q. And does that representation as it is shown on that drawing, correctly show the first type of float valve that you were working on?

A. No. No, this is a different type. This is a different valve here.

By Mr. Clement: I will ask the Reporter to mark this physical exhibit, which is a portion of a float valve, as Defendants' Exhibit 59 for identification and the outlet pipe which can accompany it, as Defendants' Exhibit 60 for identification.

(Thereupon said portion of float valve and the outlet pipe were marked respectively Defendants' Exhibits Nos. 59 and 60 for identification.)

2200 By Mr. Clement:

Q. Mr. Richardson, do you recall the circumstances under which you began working on a modified—not modified, but a new form of intake valve for a filler tank?

By Mr. McCanna: It seems to me that those are leading questions, your Honor. If the witness did something, let him tell about it.

By the Court: Well, state whether or not. You can always change a leading question by asking him to state whether or not.

By Mr. Clement:

Q. Mr. Richardson, will you state whether or not you began to work on an intake valve useful in a filler mechanism in 1953?

A. Yes, I did.

Q. What was the nature of that work?

A. The float valve was to work—was supposed to work, rather, so that it would eliminate all possible foam in a tank.

Q. Were you familiar at that time with the intake valve in the mechanism which was being sold by Mr. Bracile?

A. Not too familiar, no. I had been told how it
2201 operated but I did not know anything much about it, no.

Q. Had you been told there were any problems in connection with it?

A. Well, they had said there was foam in the tank. That is,—

Q. Were you asked to develop a different type of intake valve?

A. Yes. That is what that one was started from.

Q. Mr. Richardson, I hand you a valve marked for identification as Defendants' Exhibit 59 and ask you to tell us what that is.

A. Well, it is a body and a stem of a float valve.

Q. When was it designed, if you know?

A. Well, that was possibly in January or February of 1953.

Q. Does that drawing which we referred to previously as Plaintiff's Exhibit 75, represent this same float valve?

A. It doesn't. It doesn't, no.

This one doesn't represent this float valve, (indicating). We changed it quite a deal later.

Q. What are the differences between that float valve

which is marked Defendants' Exhibit 59 and the one
2202 shown in Plaintiff's Exhibit 75, the photostat?

A. Well, this float valve here (indicating), was made of bronze to be coated and it also had two ears on it for the float valve and we changed this from two ears to one ear later on.

Q. Do you have any recollection of any drawings of this particular form of valve, Defendants' Exhibit 59, with particular relation to this Plaintiff's Exhibit 75?

A. Well, I don't have any idea other than there was a drawing made up at that time.

Q. Was there any change made in that drawing which was related to Plaintiff's Exhibit 75?

A. Oh, yes, we made a change in the drawing.

Q. What is the relationship then between the drawing, Plaintiff's Exhibit 75, and this physical exhibit 59?

A. The differences are as I have stated. We, at a later date, when we wanted to make our filler, we changed this valve, as I have stated, to one ear.

Q. Referring back to the date now of March 21, 1953, and your hesitancy about that date previously, is that related to what we have just been discussing?

2203 A. Well, that relates back to this present valve, yes, the date.

Q. Was your recollection—

By Mr. McCanna: Pointing—does that have an exhibit number?

By Mr. Clement: Defendants' Exhibit 59, yes.

By the Witness:

A. No. 59.

By Mr. Clement:

Q. Does the date which appears on Plaintiff's Exhibit 75, the drawing, namely, March 21, 1953, have any relation to this physical exhibit, Defendants' Exhibit 59?

A. Yes, it has some relationship to it, yes, other than the change that is made on it.

2204 Q. Well, let me ask: Does the valve as shown in Plaintiff's Exhibit 75 represent the modified valve?

A. Yes.

Q. In what way is it modified?

A. It is modified to the effect that these two ears are as one. There are no two ears on it. It is just one.

By Mr. McCanna: Again pointing.

By Mr. Clement: Defendants' Exhibit 59.
By the Witness: 59.

By Mr. Clement:

Q. Well, you do have a recollection that that date of March 21, 1953 is closely connected with Defendants' Exhibit 59, do you?

A. Oh, I believe so, yes.

Q. And your recollection with respect to the form of valve shown in Plaintiff's Exhibit 75 was that it was made later?

A. Well, this was made much later, this valve, yes, definitely.

Q. Could the date—

2205 By Mr. McCanna: Now he is pointing at the drawing.

By Mr. Clement: Yes.

By Mr. Clement:

Q. Could the date of March 21, 1953 about which you were hesitant previously, relate back to a drawing relative to that early form of valve?

A. Oh, yes.

Q. Was that on which your hesitancy was previously based? You couldn't relate this form shown in that early date?

A. I am hesitant about making any statement of any dates because I don't recall them, but if the date was on there, I put it on there for a specific purpose and it must have gone back to the time I made the drawings, yes.

Q. And it would have gone back to this early form of valve?

A. Oh, yes.

By Mr. Clement: I will ask the Reporter to mark a penciled sketch for identification as Defendants' Exhibit 60.

By Mr. Houghteling: 61.
By Mr. Clement: 61.

2206 (Thereupon said penciled sketch was marked Defendants' Exhibit No. 61 for identification.)

By Mr. Clement:

Q. I hand you this sketch, Mr. Richardson, and ask you if you can identify it.

A. Yes. I made that sketch.

Q. What is it?

A. It is the down spout from this same type of valve.

Q. I hand you the exhibit marked for identification as Defendants' Exhibit 60 and ask you if you can identify that.

A. Yes, sir. That is the model.

Q. The model of what?

A. Of the down spout.

Q. How is it related to the valve mechanism, Defendants' Exhibit 59?

A. It goes into the opening at the bottom of the valve.

Q. Would you demonstrate that, please?

A. Yes. It fits into this position, so (illustrating).

Q. What is the purpose of that down spout?

A. That is to deflect the milk against the side
2207 of the tank.

Q. What date does the pencil sketch which you previously identified, which is marked Defendants' Exhibit 61, bear?

A. 4-2-53.

Q. Were you working on this valve that we have just described now for installation into that tank that is shown on Defendants' Exhibit 33 or for some other purpose?

A. No. We were just working on the valve. It wasn't done for any specific purpose. It was at the time, just to make a valve.

Q. It wasn't, if I understand you, connected with the Defendants' Exhibit 33?

A. No, no.

Q. Were there troubles in the field with the valve that was presently in use in the filler that Mr. Brasile was selling at that time, if you recall?

A. Well, I heard there were, yes.

Q. Mr. Richardson, I show you a second photostat which has been marked for identification. No. I believe it has been introduced as Plaintiff's Exhibit 72.

2208 I will ask you to refer to the date next to the word "date" that appears on that representation of a drawing.

A. 7-1-53.

Q. Is there another date on the lefthand side?

A. Yes. There is a date, 3-21-53.

Q. Is that the same date as appeared on the drawing that we were just examining a moment ago, Plaintiff's Exhibit 75?

A. Yes, yes.

Q. And does this drawing, Plaintiff's Exhibit 72, disclose the same intake valve as was illustrated in Plaintiff's Exhibit 75?

A. Yes, yes.

2209 Q. To what does that second date then, refer?

A. Well, that date goes back to when this first intake valve was drawn. We subsequently had it made. I don't know which date it was but it goes back, for that purpose, or relating it back to that time.

Q. What is your recollection as to the date upon which that particular drawing represented by Plaintiff's Exhibit 72 was made?

A. This drawing here was made back in July. It was made in July of 1953.

Q. Would that be the date that you first read?

A. Yes.

Q. And next to the word "date" on the drawing?

A. Yes.

Q. And the 3/21/53 date refers to what?

A. That refers back to the valve, the intake valve and possibly another drawing that was made.

Q. When did you first start preparing the drawings for the machine which was constructed after the termination of the contract between Mr. Brasile and his corporations and the Mojonnier-Dawson Company, if you recall, the working drawings?

A. Oh, I must—that must have been in either
2210 June, July or August, along in those dates. They kept coming up and as they came up, why, we made drawings of them.

Q. And all of those working drawings were separate from any drawings which had been used in conjunction with Defendants' Exhibit 33, is that correct?

A. Oh, yes. They had nothing to do with that.

By Mr. Clement: You may cross examine, Mr. McCanna.

By Mr. McCanna: No cross examination.

By Mr. Clement: I believe I didn't introduce these sketches that I had identified. I had best do that at this time.

I would like to introduce into evidence these four sketches, Defendants' Exhibits 55, 56, 57 and 58.

Perhaps I better recall Mr. Richardson and have him identify it. I believe they were only identified by Mr. Botts.

By Mr. Clement:

Q. Mr. Richardson, will you look at Defendants' Exhibit 56 and tell me whether you can identify it?

A. Yes. I made that drawing or sketch.

Q. What date does it bear?

2211 A. 3/3/53.

Q. For what purpose was it made?

A. It was made for the rocker arms for the sealing, stapling device.

Q. Of what mechanism?

A. On that D-33 exhibit.

Q. I hand you Defendants' Exhibit 55, and ask you the same question. What date does it bear?

A. 3/8/53.

Q. Was that prepared by you?

A. Yes.

Q. What does it represent?

A. That is a pusher hinge and the spring.

Q. For what mechanism?

A. For the D-33 mechanism.

Q. Were these both exhibits, Exhibits 55 and 56, prepared on or about the date they bear?

A. Oh, yes, they were. No, they were—that is, this 56 was done prior to the time of doing any work on it. I think it was an idea to get something worked up and this one of 3/8/53 was made after we made the piece, this one drawing.

Q. Well, the dates that appear on the drawings, however, do they represent the dates on which you pre-

2212 pared the drawings?

A. Yes.

Q. Not the physical parts?

A. Oh, yes. That is correct.

Q. I show you Defendants' Exhibit 57 for identification and ask you if that is a drawing you can identify.

A. Yes. I made that. That is 3/1/53. That is the pressure plate assembly.

Q. Of what mechanism?

A. On D-53.

Q. 33?

A. 33, yes. I beg your pardon.

2213 Q. Did you make that drawing on or about the date it bears?

A. Yes.

Q. I show you Defendants' Exhibit—I referred to it as a drawing. Actually, it is a sketch?
A. Yes.
Q. I refer you to Defendants' Exhibit 58 which is another sketch and ask you if you can identify that.
A. Yes. That is the idea for this stapling block.
Q. For what mechanism?
A. For D-33 mechanism. That has the date of 3-1-53. That was also made on that date.
Q. The drawing was made on that date?
A. Yes.
Q. Did you use the four sketches in connection with the work you did with Mr. Botts?
A. Yes, they were used.
By Mr. Clement: I offer these exhibits, DEFENDANTS' EXHIBITS 55 to 58 into evidence.
By Mr. McCanna: No objection.
By the Court: They may be received.

• • • • •

2216 By the Court: Proceed, gentlemen.
By Mr. Voland: Mr. Willette, please.

EDWARD WILLETTE, called as a witness on behalf of the Defendants, having been first duly sworn, was examined and testified as follows:

Direct Examination by Mr. Voland.

Q. Will you state your full name, please?
A. Edward Willette.
Q. Where do you live, Mr. Willette?
A. I am presently residing in Carmel, New York.
Q. That is C-a-r-m-e-l?
A. Yes.
Q. What is your business?
A. I am a representative of the U. S. Dairies covering the eastern states.
Q. Have you been continuously in the employ of U. S. Dairies since on or about the 1st of January, 1954?
A. That is correct.
Q. Prior to that time, Mr. Willette, were you at any time—
Did I confuse you, your Honor?
2217 By the Court: No.

By Mr. Voland:

Q. (Continuing.) Prior to that time, were you at any time in the employ of U. S. Carton Forming Corporation?

A. Yes. I started with them from the day they were more or less formed until the division of the company came.

Q. When, if you recall, was it that you started with U. S. Carton, Mr. Willette?

A. That was in the fall, I believe, of 1952.

Q. That is correct, and you stayed with them, I take it, until the summer of 1953, late summer or fall?

A. Yes.

Q. Will you tell us briefly what your educational background is, Mr. Willette?

A. Well, grade school, high school, and I went into the Army. The Army sent me through college for an Army mechanical engineering degree.

Q. Where did you take that Army course?

A. New York University.

Q. While you were in the employ of U. S. Carton, Mr. Willette, what were your duties?

A. My duties were to be that of a sales representa-
2218 tive. However, as time went on I found I was in service more than I was in selling, you might say.

Q. Were you, as a salesman, supposed to be selling the filler machine made by the Mojonnier-Dawson Company?

A. Well, yes, that was the machine we had to sell.

Q. Did you have any special territory that you covered?

A. Well, I started out in the east, that is, in the Pennsylvania, the Pennsylvania line you might say, covering all the states from there east. Eventually for U. S. Carton I lived down in Atlanta for a while, and then came back up to handle the northeastern states again.

Q. Did your work also include the installation of these filler machines?

A. In many instances, yes. That was a must.

Q. When you say that you found that you had to devote most of your time to service calls, will you tell us how you were sent on these service missions? What would happen that would send you on a service call?

A. Well, in the dairy industry, when a man has
2219 milk in the vats, he has to get rid of it fast, and if he has a breakdown in any line, it has to be fixed within a matter of hours. Otherwise you can't deliver sour milk on to the street.

So we, all of us, not only myself but almost every employee of U. S. Carton, has had to go out on service calls due to breakdowns in machinery. I would say the most common, getting down to that, the most common problem we had—

Q. Before you get to that, let me ask you—

By Mr. McCanna: Your Honor, I am objecting to the "we" part of it and who he is testifying about. I think if he tells what he knows himself.

By the Court: Yes. Don't lead him, and generalities won't help you very much.

By Mr. Voland:

Q. Will you tell us, Mr. Willette, how these calls were made? I mean, how did you travel?

A. Well, I traveled in a car a good deal when it was within a day's reach, you might say, and if it wasn't within a day's reach, I had to fly by plane. Usually the jobber or dairyman would meet me at the airport, and take me directly to the plant.

2220 Q. Referring again to this period when you were doing service work for U. S. Carton Forming Corporation, will you tell us in a general kind of way, first, the kind of mechanical difficulties or breakdowns which you encountered in the field, Mr. Willette?

A. The most common and universal, and as far as I could tell to this day, is top leakers. That was the main trouble with all the Mojonnier-Dawson machines.

Q. Will you tell us what you mean by top leakers?

A. When a carton is turned on the side, if you get a bubble of milk leaking out of the carton, whether it comes from the staple or a corner of the carton, it is considered a top leaker.

The reason we had so many complaints along that line was that the big Ex-Cell-O machines, which originally put out the Pure-Pak cartons, were not giving top leakers like we had, or I had with this machine.

Q. When you encountered top leaker problems in the field what, if anything, did you do or could you do

2221 about it?

A. Try and trim it down as much as possible. By that I mean this: There were very few instances that I know of where I have been successful in completely stopping the leakers.

Checking hydraulic fluid to make sure enough pressure had been put on to the top of the carton. Checking the temperature of the heating block in the stapling unit or attached to the stapling unit, and making sure the staplers were going in perfectly perpendicular to the carton.

There were a lot of little things that could have caused top leakers. The main difficulty, I believe, was the fact that on the top of his—

Q. Do you want to point out something on the machine?

A. Yes. I just noticed it for the first time today. Just five minutes ago I walked over to the machine to check something.

There is a brass bar there which, when the carton is in the machine, extends all the way across the top of the carton. Now this brass bar is connected to the hydraulic cylinder on a pin.

2222 On all the machines up until this model that I have seen, this pin was a pivot action so that the brass bar, when it would come forward, would have to center itself on the carton. Now one of the things that I told Mr. Mojonnier about on quite a few visits to his factory was that I thought this should be stable so that when came forward it came forward with a set pressure against all edges of the carton.

On the machines that we had, because it was pivoted, if any obstruction—it might be the stapler itself—was to block the pressure of this brass bar against the top of this carton, we would have an uneven pressure across the top of the carton, and the side with the less amount of pressure would leak.

Now, this is the first machine I have seen where he has actually done that. I cannot move this brass bar. Yet on all the machines that we used to have delivered, this was on a sort of a pivot like that.

Q. Did you discuss that particular problem at any time with Mr. Mojonnier while you were selling his equipment through U. S. Carton?

2223 A. Yes. On one occasion after I had been out—I didn't only cover the Eastern states. When it came to service I might find myself in Chattanooga, down in Texas, almost into Mexico, and in one case out in Oklahoma.

The jobber out there, Frank Brooks, was having a great deal of trouble with one dairy who was continuously complaining about top leakers. I made a special trip out there.

We tried to solve the problem. I came back to Mojonnier and told him what I thought the trouble was, and again it had to do with this brass bar.

As a matter of fact at that time, I spent four straight days in his plant. I did that for two purposes—

Q. Never mind the purposes now.

A. But I did tell him that that was it.

Q. You did tell him about it?

A. Yes.

2224 Q. Can you tell us briefly what other kind of service difficulties were encountered in the field beside the top leakers?

A. Well, the timer, inaccuracy of fill would be a common complaint. Not as common as top leakers. That was usually due maybe to moisture or something like that getting into the timer, or possibly some burned out part.

Another common complaint having to do with the timer was the fact that when that machine left the factory—and this used to more or less burn me up, I guess you might say—was that they could turn the dial on this timer all the way to the top and still couldn't pour a half gallon.

You had to take the timer all apart, and there was a condenser, a slide condenser I believe is the terminology used for that, which had to be moved over to extend the fill for the half gallon.

In other words, when it would leave the factory it would appear to me it wasn't completely checked on to see that it could be opened up all the way for complete fill of a half gallon carton. Sometimes it would be the opposite, where you couldn't cut it down to a half pint.

2225 Other problems, of course, that did come up were the hydraulic unit being foot operated. No two people operated the units alike, consequently some stamped on it, and if they did maybe eventually the parts would wear out, and replacement of seals, and that sort of thing.

Q. What experience, if any, did you have with the replacement of parts?

A. Well, there was another major headache. I not only can testify to that, but I believe I was asked to tell Mr. Mojonnier that his parts were not interchangeable. In many, many cases, if I asked for, let's say, a new stapler, the holes would be drilled in the wrong place so I couldn't mount the stapler on the stapler bracket properly. It wouldn't be centered.

It seemed like, although I imagine he might have been

trying to get sort of mass production methods, I went into his factory to see that, when it actually did get out into the field, many of his parts had to be re-machined, re-filed, re-drilled, just to make them fit.

Q. Did you also discuss these difficulties that you had from time to time with Mr. Brasile?

2226 A. Well, Mr. Brasile would be the first person I would go to because he was my immediate superior, boss, you might say, and I knew his contact with Mr. Mojonnier might be better than mine. However, after a while I felt, since I was out in the field more often than Mr. Brasile, maybe I better tell Mr. Mojonnier myself, so that is when I started going to Mr. Mojonnier with some of these problems.

Q. During the time that U. S. Carton and U. S. Filler were selling these Mojonnier-Dawson machines, were these difficulties to which you have referred corrected?

A. There were attempts made to correct them, naturally, because if we didn't try to make it appear like we were attempting to, it would stop future sales.

They were not corrected actually. We still, and as far as I know, his machines still have top leakers.

We had a sanitary problem in some states. That plastic plate across the top of them, that didn't come out until much later. Even after he did make them, he made them out of a plastic that would be cracked just in mailing them alone.

Q. Do you know why this plastic plate was placed

2227 on this machine, Plaintiff's Exhibit 39?

A. Well, yes. A lot of states, the Health Departments or the Sanitary officers of the cities, that sort of thing, objected to the top of the carton being opened from the time it was filled until the time it was sealed.

In other words, the filling mechanism was here and the closing mechanism was here. The carton was opened from here to here, therefore they wanted a cover over that.

The original machines came out without the cover, and finally—

2228 By Mr. McCanna: I move to strike this all out. The witness hasn't laid any foundation for having built this construction into the Mojonnier machine.

By Mr. Voland: He is stating what he knows of his own knowledge, if the Court please.

By the Court: Well, it may stand.

By Mr. Voland:

Q. Proceed, Mr. Willette.

A. The carton was open from here to here. Many health officers would no. approve the machine in their cities or anything, so this idea of putting this plastic plate across the top, as far as I know, would be Mr. Mojonnier's idea. All I could do or anybody else was to make recommendations as to what should be done. But putting that plastic plate was his, and when it was put on, they were breaking as fast as they got them.

Q. Did you have any trouble with staple leaking?

A. Oh, yes.

Q. Did you make any specific recommendation to Mr. Mojonnier to eliminate the staple leaking?

2229 A. Well, I—

Q. Would you answer that yes or no, please?

A. Yes, I did.

Q. And what was that recommendation, Mr. Willette?

A. The Ex-Cell-O Corporation uses a round wire staple. Therefore, why couldn't we? A round wire staple, if you were to take—

Q. I want you to tell us what you told Mr. Mojonnier as nearly as you can recall.

A. All I told Mr. Mojonnier is that I thought a round wire staple would be better than the flat edged staples which we were using.

Q. Do you know of your own knowledge that during this time the Ex-Cell-O Corporation was using a round wire staple?

A. Yes, they were.

Q. And were they having trouble with top leakers or staple leakers?

A. No. Ex-Cell-O never had staple leakers that I know of.

Q. Did you during the time you were with U. S. Carton and U. S. Filler, did the Mojonnier-Dawson equipment change over to a round wire staple?

A. No.

2230 Q. What were they using during that time?

A. We always used a flat edged staple, that is, made from flat steel.

Q. Do you have an opinion, Mr. Willette, as to why a flat wire staple would cause staple leaking and a round wire staple would not?

A. Yes.

Q. Would you tell us, please?

A. I had that demonstrated to me by a man who represented the Bostitch staple people. He took an ice pick, took one of our milk cartons that had water in it, not milk, and he stuck the ice pick right through the carton, pulled it back down, and there was no or just maybe a tiny bubble of water out of the side of the carton.

Then he took a thin knife blade, stuck it in, pulled it back out and the water just poured out.

Now they told me this: That when you put a round wire or round object through something, when you draw it back out of the paper, the paper itself tends to seal the hole. But putting a flat surface through the paper keeps the hole open. It will not seal itself when it is with-
2231 drawn. The same way that tubeless tires, these puncture-proof tires, you can put in a nail and pull it out and it seals itself.

By Mr. McCanna: If your Honor please, it seems to me this testimony about staples and cartons, what has that got to do with this Miller case? I think they are way far afield on all of this. I move to strike it.

By Mr. Voland: Mr. McCanna spent several weeks trying to give the Court a false impression as to the reasons why we were attempting to remedy defects in the Mojonnier machine.

Now we are spending about ten minutes to explain why we undertook to do those things, if the court please, and that is all.

By the Court: Well, it is very interesting testimony he has given. If he is qualified to express an opinion, it might be all right. But he doesn't attempt to express an opinion. He is telling us what someone told him who
2232 may or may not have been qualified to express an opinion.

So I think that had better go out, about ice picks and blades and that. It may be true, I don't know. It sounds plausible. Whether it is or not, I don't know, and I am afraid this gentleman doesn't know. I am not sure that his informant knew, but even if this informant did know, this would be hearsay.

2233 By Mr. Voland:

Q. Did Mojonnier-Dawson Company send men out in the field with you?

A. I never that I can recall went in the company of one of Mojonnier-Dawson servicemen.

Q. Went in the company of, did you say?

A. Yes. I am trying to recall if I ever met one out there, and I think on one occasion I did, but I am not sure.

Q. Well, all I am asking is whether any representative of Mojonnier-Dawson Company accompanied you on your service calls.

A. No.

Q. Now directing your attention, Mr. Willette, to the time when you first went to work for Purity Pack, that was when, if you recall?

A. That was in the, about November of 1953, or is that 1952? I don't recall. It was the date it was started. I don't remember the dates. The day that Purity Pack more or less went into existence was the day that I went along with it.

Q. Would the late fall of 1953 sound correct to you on that, approximately?

A. Yes, it would

2234 Q. Now I think you may not have told us what your duties were for the Purity Pack Corporation, a defendant in this suit. Will you tell us again, please?

A. Sales representative of Purity Pack to the dairymen and to the jobbers.

Q. You were calling on both jobbers and dairies?

A. Yes.

Q. In what territory?

A. Again I kept with my eastern territory.

Q. Now would you define that territory very briefly for us, please?

A. My territory started in at the Pennsylvania border, the Ohio-Pennsylvania border, ran to Maine, as far south as approximately Virginia.

Q. In other words, virtually the entire eastern seaboard area, is that correct?

A. Yes.

Q. When was it, if you recall, that the first Purity Pack or U. S. Dairies machines were available for shipment?

A. It was about January.

Q. 1954?

A. Beginning of January of 1954. I had started 2235 calling on them prior to that time to take the orders for the machines.

Q. Now in the early part of January, you say you had started to call, and perhaps even earlier, on jobbers to line up orders?

A. Yes, I had to because we made deliveries for some of those jobbers in the month of January.

Q. Will you tell us, if you can recall, who were some of the jobbers that you called on during that period?

A. Well, I will start from west going east: Creisi Dairy Supply, Newcastle, Pennsylvania. I called on Ralph Miller, Canonsburg, Pennsylvania. Girton Sales Company—

Q. Where are they?

A. That is in Bloomsburg, Pennsylvania. John Lanning in Berwick.

Q. Pennsylvania?

A. Berwick, Pennsylvania.

Frank Black, Philadelphia. Down in Baltimore I called on Kaestner.

Q. Is that spelled K-a-e-s-t-n-e-r?

A. That is correct.

Q. Baltimore, Maryland?

2236 A. Yes. Eastern Dairy Supply, Long Island, New York. Burton Ford Company in Waterbury, Connecticut. Valley Sales Company in Springfield, Massachusetts. Tom Lockerbie, in Utica.

Q. Utica, New York?

A. New York, yes.

Dairymens Supply in Utica, New York. Dietrich in Syracuse, New York.

There may have been a few others. I have added a couple since, but those are the ones I called on approximately at that time.

2237 Q. Prior to the middle of January, 1954, had you received initial orders from any of the jobbers whom you called on?

A. Yes. I received initial orders from Frank Black, from Creisi, I believe at that time—I am not sure of that. I would have to check the record. I know I received one from Frank Black. Valley Sales, Dietrich, Tom Lockerbie, and I believe there was one or two others, but I am not sure. Those I am definite about.

Q. How about Burton Ford?

A. Burton Ford definitely, yes.

Q. Did you believe that you would be able to establish

regular relations with those jobbers from whom you had taken initial orders?

A. Yes.

Q. And any of the others on whom you had called?

A. Yes, I believed I would have and could have, and I know they wanted to.

Q. Can you tell us whether deliveries were made on any of these initial orders that you have referred to?

A. Yes. We tried to place one machine in where we thought, in other words, make it our show room if
2238 possible in various areas. Tom Lockerbie got one of our machines for making a display in New York State, you might say.

Q. Was that delivered pursuant to this initial order that you got from him that you have referred to?

A. Yes, that was an initial order. He even came to Chicago on that to be sure he would get his machine.

Valley Sales ordered on initial order. Burton Ford did.

Q. You have told us whom you got orders from. I am asking you now which of those initial orders you filled that you know of?

A. Those that I have just given you, those names, were filled.

Q. Will you repeat those, please?

A. They were initial orders.

Q. You filled all of those initial orders, did you?

A. Yes, and I think Frank Black got one on the initial order.

Q. Now have you received any followup orders from any of those jobbers?

2239 A. No, with one or possibly a few exceptions. Let's put it this way: Valley Sales were the only one that continuously gave us orders all along. The rest of them completely stopped cold for about six months or seven months.

Q. Do you know why?

A. Yes. They received a letter—

By Mr. McCanna: Now just a minute. Your Honor, how does he know?

By the Court: He is testifying to a mental state, yes.

By the Witness: I was informed by them—

By the Court: Well, agai.. –

By Mr. Voland: I am sorry, I didn't hear the Court's comment.

By the Court: He started out telling the mental state of somebody else. Now he is attempting to recount hearsay.

By Mr. Voland:

Q. I don't want you to tell us, Mr. Willette, what anyone told you at this moment. I am merely asking you if you know why.

2240 By the Court: He has to go into some man's mind to find out other than his own.

By Mr. Voland:

Q. Mr. Willette, I hand you a document which has been marked Defendants' Exhibit 30, and ask you whether you have seen that document before?

A. Yes, I have.

Q. What does that document purport to be, Mr. Willette?

A. This was the document—

By Mr. McCanna: I think the document speaks for itself.

By Mr. Voland: This is just for connection purposes.

By the Witness: This was the document I found in the offices and shown to me by the various jobbers I have mentioned.

By Mr. Voland:

Q. You have encountered that in the field, have you not?

A. Yes.

Q. I show you a document which has been marked as Defendants' Exhibit 31, and ask you whether you have seen that document before?

2241 A. Yes.

Q. When and where?

A. In the jobbers' offices. Some of them, now, I believe on this one, I also saw this in dairies.

Q. You think you saw Defendants' Exhibit 30, is it, in the dairies you called on?

A. Yes. I believe I saw this one in dairies and this one, well, I saw both of these, but I don't believe I remember seeing this one in a dairy.

By the Court: Now "this one" doesn't mean anything.

By the Witness: Document 31, Exhibit 31. I don't recall seeing that in the dairies. But document, Exhibit 30, I do.

2242 Q. Well now, when you called on these jobbers with whom you had initially contacted, when you called on them for repeated orders, were these documents, Defendants' Exhibits 30 and 31 shown to you and discussed on such occasions?

By the Court: Whether they were or not, is inadmissible.

By Mr. Voland: I see.

By Mr. Voland:

Q. Do you recall—

By the Court: You have to be specific. I don't see how you started to get this in with this gentleman.

By Mr. Voland:

Q. Have you had any conversations, Mr. Willette, with any of the jobbers whom you called on in the early days of 1954, concerning either of those documents, Defendant's Exhibits 30 or 31?

By Mr. McCanna: It seems to me that is certainly hearsay, out of the presence of the plaintiff.

By Mr. Voland: If the Court please, what we are simply trying to establish is—

2243 By the Court: You are just violating fundamental rules of evidence and I am pointing it out to you.

By Mr. Voland: However, we are merely offering it to show conditions in the trade and it is not information that is offered for the truth of the matter, serving simply to show the impact of this correspondence on the trade.

By the Court: Connect it up.

By Mr. Voland: Very well.

By the Court: Sustained.

By Mr. Voland:

Q. Have you had any conversations with jobbers relative to those documents, Defendants' Exhibits 30 and 31?

By the Court: Sustained.

By Mr. Voland:

Q. Have you been able to receive, get any orders to date, Mr. Willette, from Mr. Black?

A. We have received several orders within the past 60 days, I would say. They are beginning to come in from all the jobbers now but this thought is more or less gone from your mind immediately.

By Mr. McCanna: I move to strike the last 2244 sentence. It has no connection.

By the Court: Strike it out.

By Mr. Voland:

Q. During the period, sir, of January, 1954, until 60 days ago, you have not been able to get any orders from Mr. Frank Black, is that correct?

A. I think we filled one more order in that period of time.

Q. Now again referring to that period of time, have you been able to get any orders from Kaestner?

A. We filled Kaestner's first order about 90 days ago.

Q. How about Eastern?

A. Eastern, we never got an order from—

Q. How about Dairyland Supply?

A. No, no orders.

2245 Q. How about Lanning?

A. No.

Q. How about Ralph Miller?

A. No.

Q. How about Creisi?

A. Yes, we just filled another order for them, I believe.

Q. Did you take any orders from Creisi during the period January, 1954, until 1955, during the year 1954?

A. No, I don't believe so.

Q. How about Girton?

A. Yes. Or, wait. That would be this year. We just filled an order for him about sixty days ago also.

Q. Now these jobbers whom you contacted early in 1954, I think you said you established one as a regular jobber, and that was Valley Sales?

A. Yes.

Q. Where are they located?

A. That is in Springfield, Massachusetts.

Q. What territory did they cover?

A. That was what I was coming to. I tried to
2246 place a jobber in a strategic place. Valley Sales was placed in Western Massachusetts and their territory that they normally covered was the far west end of Massachusetts and the southern part of Vermont.

Q. Now speaking generally of the entire territory which you covered, would you say that is a fairly rich territory, the seaboard territory, from the standpoint of dairy sales equipment?

A. It is the richest in the nation. That is why I wanted it.

Q. How would the territory covered by Valley Sales, mainly Western Massachusetts and Southern Vermont, compare with the rest of the territory in that respect?

A. Well, it speaks for itself. It is one of the poorer sections. That is, dairywise there are fewer dairies.

By the Court: Where?

By the Witness: In Western Massachusetts and Southern Vermont, sir.

By Mr. Voland:

Q. Can you tell us, if you know, how many machines manufactured by Purity Pack or U. S. Dairies Sales Corporation you have been able to sell in your territory since January 1, 1954 to date?

2247

A. It is between 35 and 40, sir.

Q. And how many were sold to this Valley Sales Company in Springfield, Massachusetts?

A. Better than 20.

Q. Were the rest of the sales scattered over the entire territory or where they concentrated?

A. The rest of them were scattered also. They were the only ones that continued to sell.

Q. At the time that you were out seeking to establish jobbers for U. S. Dairies, Purity Pack, Mr. Willette, how many makes of machines were competitive to the machine which you were selling, that is to say, first, let me ask you: How much did your machine sell for to the dairy?

A. Our machine at that time was $2195.00.

Q. And that machine was designed only to fill the Pure-Pak cartons, isn't that correct?

A. There is only three machines—

Q. Just a moment.

The machine you were selling was designed only for the Pure-Pak carton, is that correct?

A. Yes.

2248

Q. Was there any other machine on the market at that time, selling to the dairy, at less than three thousand dollars, which was designed to fill the Pure-Pak paper carton?

A. Mojonnier-Dawson.

Q. That was the only one?

A. The only one.

2249

Q. In February of 1954, Mr. Willette, did you encounter in the trade rumors that Mojonnier-Dawson patents were infringed by the machine you were selling?

A. Prior to February.

By Mr. McCanna: Now who—that is a—

By the Court: Sustained.

By Mr. Voland:

Q. I think you referred, Mr. Willette, to a machine which was sold to a jobber named Tom Lockerbie in Utica, New York, or Schenectady. Where is it?

A. Utica.

Q. Do you know what became of that?

A. It went to Greens Ice Cream Company in Schenectady.

Q. Did you have occasion to see that machine on the premises of Greens Ice Cream Company?

A. Yes.

Q. After it was delivered?

A. Yes.

Q. When was that, if you recall?

A. In January, 1954.

Q. Had you been instructed to install that machine?

A. Yes.

2250 Q. Had you had any communications with Mr. Lockerbie or Mr. Green concerning arrangements for installation?

A. Yes. I called on Mr. Lockerbie on an average of about every two or three days as to when that machine had arrived there, as it had been shipped much earlier, I was told it hadn't arrived, it hadn't arrived, and that continued for about two weeks.

By Mr. McCanna: I object. It is hearsay.

By Mr. Voland: It is not for the truth of the matter, if the Court please. I am simply trying to show the simple fact that this man tried for about a month to make arrangements to install this machine and that's all.

By the Witness: I then called—

By the Court: The objection is sustained. You are trying to recount hearsay. I can't get it. You might have asked for admission of fact. You might have taken a deposition. You might have asked for admission of fact.

It could have been admitted and proven and you could charge him for it.

2251 By Mr. Voland: These statements are not offered for the truth of anything that is said.

By the Court: I understand what you say, but even so, you are trying to prove that he attempted to install the machine and the reason that he didn't install it is because of what some person out of the presence of the plaintiff told him.

The objection is sustained.

By Mr. Voland:

Q. Had you requested Mr. Green that he advise you when that machine was delivered?

A. I gave Mr. Green my telephone number.

By Mr. McCanna: It is the same kind of—

By the Court: Sustained. Strike it out.

By Mr. Voland:

Q. And when did you have occasion to see that machine at the Green Ice Cream Company's plant?

A. I felt that the machine should have been delivered by then, after that, I decided to take trip up to see Deitrich, I believe, up in Syracuse, and I probably wanted to stop off and see Tom Lockerbie too on the way from where I live in Carmel, New York, again, right
2252 through Schenectady.

Mr. Green's Ice Cream Company was in Schenectady. I decided to stop, just a chance, and ask Mr. Green if he had received, or had any word on where our machine might be.

Now, I didn't ask him yet—

By Mr. McCanna: I object again.

By Mr. Voland:

Q. Just tell us what you did.

A. I stopped in Green's Ice Cream and I walked in the front—

Q. Just a moment. Will you tell us who was there when you stopped in there?

A. Well, Green's Ice Cream Company had a counter in the front.

2253 Q. I see.

A. An ice cream parlor, like, in the front section with the dairy plant in the back, and I walked in the front section where the ice cream parlor was and told them who I was and I did not know who I had met.

A gentleman had stopped me and explained that he was, I believe—

By Mr. McCanna: I object to that as hearsay.

By Mr. Voland: Very well.

By Mr. Voland:

Q. Were you escorted into some other part of the building?

A. I met somebody and they escorted me, after about five minutes, into the back room.

Q. And who did you see in the back room?
A. I found Kirk, Kirkland.
Q. Who is "Kirk"?
A. The gentleman in the dark suit (indicating).
Q. Can you point him out?
A. He is directly in back, sir, next to Mrs. Mojonnier. And, he had an assistant from the Mojonnier factory,
2254 which I had worked with at the time I worked there.
Q. Was Mr. Kirkland connected with the Mojonnier-Dawson Company at that time, if you knew?
A. Yes.
Q. And who else was present?
A. There was a group, I would say, of six or eight men, including, of course, Mr. Green, who was the owner of the factory. The rest of them, I can't say I knew or had seen before.

I believe there was a man from Tom Lockerbie's there who had arranged for the purchase of our machine for Green's ice cream.

By Mr. McCanna: I object to that. How does this man know what these other people did?

By the Court: Yes.

By Mr. Voland:

Q. Tell us what you saw when you walked into this inner room.
A. Kirk was displaying before these other men the Mojonnier-Dawson filler, how it worked, and so on and so forth.
Q. You mean he was demonstrating the machine?
2255 A. That is right. Well, he was—I believe it was going while I was there. It might have been turned off just before I got there, but I know I asked if I could see some of it work and I believe he obliged me at that time, so I assumed it was in working condition.
Q. Did you see the U. S. Dairies machine there at that time?
A. Our machine was shoved off to one side.
Q. Did you examine the machine?
A. Yes, I did.
Q. In what condition did you find it?
A. It was not in working condition at all.
Q. Tell us exactly what you saw about it, about the condition of the machine and what you observed.

A. The part that opens and closes the top of the carton, that cross bar, Exhibit—what is our number?

Q. It is Plaintiff's Exhibit 40.

A. That was twisted. The stapler and the heating blocks were not leveled off properly so they could not possibly be operated.

The timer looked like it had been, oh, I don't know
2256 —you might say, in other words, it didn't look new any more. It looked like something had been done to it.

Q. Did you attempt to plug in the machine and operate it?

A. No, sir, I didn't.

Q. Did you notice anything else about the condition of the machine that you haven't mentioned?

A. Well, just what somebody told me.

Q. Did you have a discussion with anyone about the condition of the machine?

A. Yes.

By Mr. McCanna: I object.

By Mr. Voland: Just a moment, Mr. McCanna. I am trying to find out who the discussion was with.

By the Court: Sustained, unless you connect it up with the plaintiff or somebody who spoke for the plaintiff.

By the Witness: I found one thing to be—that was the timer. I said it looked like it had been used. What I should say is it did—it was. It looked like it had been burned out.

By that I mean, it looked like it got awfully heated
2257 up and I could see on the pipe bits of tar or something around the bottom edges of it. I was just—I could see by looking at it that there was no sense in plugging it in; it wasn't going to work, in the first place.

By Mr. Voland:

Q. Do you have an opinion, Mr. Willette, as to how many machines sold by U. S. Dairies Sales Corporation you would have sold in your territory—

A. Yes.

Q. (Continuing)—from January 1, 1954—

By Mr. McCanna: I object.

By Mr. Voland:

Q. (Continuing)—to date, except for the pendency of this lawsuit?

By Mr. McCanna: I don't believe there has been any foundation laid.

By the Court: The objection is sustained.

We will recess at this time until tomorrow morning at 10:15.

* * * * *

2260 And thereupon the following further proceedings were had herein:—

By the Clerk: Case on trial.

By the Court: Are you ready, gentlemen?

By Mr. Clement: Yes, your Honor.

By the Court: Proceed.

By Mr. Clement: Your Honor, at the close of last night's session, we didn't formally dismiss Mr. Willette, but we talked it over afterwards and we stipulated that he was through with his testimony and Mr. McCanna indicated that he would not want to cross examine him.

By Mr. McCanna: That is correct.

By Mr. Clement: I would like to recall Mr. Mojonnier, please.

ALBERT B. MOJONNIER, called as a witness on behalf of the Defendants under the statute, having been previously sworn and examined, resumed the stand and testified further as follows:

Direct Examination (Ctd.) by Mr. Clement.

Mr. Mojonnier, we have discussed, at various times
2261 during the testimony, the actual sales of the various units that you made in the years starting with 1948.

I think our compilation is almost complete, but we have omitted some figures in the early years.

Do you have information at this time which would enable us to put down in the tabular form that we have been making up, the figures with respect to 1948 on the aerosol, for example, the aerosol fillers?

I believe you said there were 15 to 20, but I am not sure you were referring to your records when you said that.

A. I believe I testified, Mr. Clement, that prior to the design of the model CA filler for American Can in early 1950, we did not keep track of our fillers by individual serial numbers and kept no detailed record of the number that we sold.

Q. Do you have a reasonably accurate record of what was sold?

A. Yes. I will give you something, if you will give me just a moment.

Q. All right. Fine.

A. Our dollar record shows that in 1948, we sold fillers for aerosol and for whipping cream and for miscel-
2262 laneous uses, totaling, at our net selling price after jobbers' discount and commissions, $8.837.10 and totaling, at user's price, $10,825.45 and that in nineteen forty—

Q. Do you have any figures with respect to how many of those would be whipped cream fillers?

A. No, I have no breakdown on that in number of fillers. There would be more whipped cream sold than aerosol but in dollars, there would be more aerosol sold than whipping cream because the whipping cream were small units.

2263 Q. Do you have any estimates as to how many fillers of each type were sold?

A. I have a total which we believe is considered a conservative estimate, based upon total sales and on the average unit sale for the year 1948, the dollar figures for which I quoted, the year 1949 when we sold around $150,000.00 worth at net price and for the first part of 1950.

Q. Mr. Mojonnier, I am asking you now if you have any figures for the individual sales for the year 1948.

A. That is what I am getting at, Mr. Clement.

Q. I thought you had left that. I am sorry.

A. Based upon the considered estimate which we believe is conservative from the dollar sales and the unit selling prices, we estimated that we sold 300 fillers for all purposes during that period from April 12, 1948 to the middle—to the early part of 1950, when we began keeping individual records.

Q. Mr. Mojonnier, my question still relates to 1948 and how many fillers you sold in 1948.

A. Well, I cannot divide—

Q. Can you make an estimate of how many you sold in 1948?

2264 A. No, I cannot make an estimate that can be accurate at all. I can give you a pure guess. I can give you the dollar figures.

Q. Would it be less than 100?

A. In 1948?

Q. Yes.

A. I can't be sure. Probably so, but I can't be sure. I have told you the dollar figures.

Q. Less than 50?

A. I am not going to guess, Mr. Clement.

Q. How about 1948?

A. Well, I have given you my considered estimate which has been gone into very carefully and conservatively for the period from April 12, 1948 until the time we began keeping records. That is the best that I can do.

Q. Is your answer that you don't know how many you sold in 1948 or that you cannot recall or that you do not have records?

A. My answer is I do not have records of the actual number of sales. I have had to estimate it from dollar sales and average unit selling price.

Q. Do you have an estimate of the number of fillers sold in 1948?

2265 A. The only estimate that I have, Mr. Clement, is the one I have already given you of the 300 fillers sold in that entire period. I have given you the dollar sales.

Q. I take it you don't have a figure which would refer only to 1950, is that correct?

A. No, I do not. I have testified that we began in 1950 keeping individual track of our sales.

Q. Mr. Mojonnier, could you give me the figure, the total dollar figure of the price, your price, considered your price, that is, the Mojonnier-Dawson Company price; could you give me the total dollar figure for those three years, 1948, 1949 and 1950?

A. Certainly. I believe I have done that already. I can give it again.

At our net selling price after jobbers' discounts and commissions, sales of Electromatic fillers for 1948 were $8,837.10.

2266 Q. What was the average price for that year, if you recall?

A. I don't have any average for that particular year. I can tell you that the milk fillers sold for between six hundred and one thousand dollars and that the aerosol fillers sold for varying prices. The most expensive one sold in, oh, many thousands of dollars, thirty, forty thousand dollars for a complete unit with many tanks.

I presume you want me to go on with the other years?

Q. Yes, 1949, please.

A. In 1949, the figure is $147,469.62 and in 1950, the figure is $166,750.99.

Q. And there is no way we can break down the sales in terms of individual units from that large figure, that total figure for the year, is that correct?

A. That would take a complete audit of the books, Mr. Clement.

2267 Q. Do you have a figure which would tell us how many fillers were sold from the time the contract was entered into with Mr. Brasile and Mr. Polivka in the various classes, Pure-Pak, American Can, aerosol? Let's say from the time the contract was entered into until the time it was terminated, for example.

A. Yes, I can give you those. It is the same table I gave you before, I believe.

Q. No. This is the total figure for that period in which the contract was in existence.

A. The contract was in existence from December 29, 1951, until the early part of July, 1953. I will give these figures so the Reporter can add them, if that is all right.

Q. You don't have the total figures?

A. No, I would have to take it by years.

Q. I think we already have the figures for the individual years, and I was merely asking you if you had totaled them up.

A. I don't believe that you asked me for the split-up in 1953.

2268 Q. I guess you are correct. We didn't split 1953.

A. Of those which were sold before the contract terminated and those sold after. I believe if we put that split-up into the table, the figure you want would be apparent.

Q. Fine. Will you do so, please?

A. The period January 1st, 1953 to the termination of the contract—

Q. 1951?

A. No, I am talking about the split-up of 1953.

Q. Oh, all right.

A. We can add these in a moment, if you wish.

Q. All right. Fine.

A. To repeat, in the period from January 1st, 1953 to the termination of the contract in July, 1953, we sold 68 fillers for American Can cartons, 201 fillers for Pure-Pak cartons, and 2 fillers for aerosol.

In the period from the termination of the contract in July of 1953 until December 31, 1953—

Q. I don't think we need that figure. I am only talking about during the period of the contract.

A. All right. Now if you will add those figures
2269 to the ones I previously gave, you will have the totals for the period that you are talking about.

Q. The sales in 1951, none of those would be under the contract, would they?

A. One of them was. It is referred to in the contract.

Q. That would be a Pure-Pak machine, is that correct?

A. One Pure-Pak, yes.

There were 103 Pure-Pak in 1952 and 201 the first part of 1953, making a total of 305.

There must have been a couple of them returned and reshipped or something because of the discrepancy of two fillers between that and the figures I gave you yesterday from the analysis of the account but—

Q. How about American Can?

A. American Can in 1951, we sold 76.

Q. That is an estimate?

A. No, that is actual. In 1952 we sold 83, and for the period from January 1st, 1953, to the termination of the contract in July we sold 68.

All the figures on milk fillers, Mr. Clement, are
2270 from accurate individual records.

Q. Do you know what that last figure would total for those three years?

A. Just a moment, I will total it. 68 plus 83—you don't want the 1951 in there, do you?

Q. Just the period in which the contract was in operation.

A. 151.

Q. And what was the total for Pure-Pak in that same period?

A. 305.

2271 Q. Is that roughly twice as many Pure-Pak as American Can?

A. In number. It would not be in dollars because some of the American Can were more expensive machines.

Q. How long had you been selling the American Can form at the time you entered into this contract?

A. Since the early part of 1950.

Q. Mr. Mojonnier, I will ask you whether or not at the time this contract between Mr. Brasile and Mr. Po-

livka and your company, Mojonnier-Dawson, was made, was your company operating under an agreement with creditors?

A. Yes, sir. Our company operated under an agreement with creditors, an extension agreement, which was made in March of 1950, and was not concluded until the spring of 1953 when all the creditors were paid in full.

Q. Was the Pure-Pak filler business a substantial part of your business in the time that you were getting in a position to terminate this agreement with creditors?

We have already seen that you sold twice as many Pure-Pak as you did American Can.

A. Yes, it was a substantial part. It was by no 2272 means the dominating factor, but it was a substantial part of the business, yes.

Q. Do you have any idea how the total dollar volume of the Pure-Pak cartons during that period compares with the dollar volume of your other business?

A. You mean, I believe, Pure-Pak fillers.

Q. Excuse me, Pure-Pak fillers, yes.

A. Didn't I make an estimate on the stand the other day that about a third of our business was Pure-Pak? It would be an estimate, without auditing.

Q. I am only asking you if you have a better idea than you had the other day now that you have looked at your books.

A. No, I don't. I haven't made a detailed analysis. It was a substantial part.

Q. Was it half, do you think?

A. No, I don't think so. Our aerosol business got very good.

Q. I am talking about the period under this agreement with creditors.

A. Yes, that is what I am talking about, too, because we sold 38 aerosol fillers in '52 and in 1953. Considering the size of those machines and the dollar volume, 2273 that was a lot of business.

Q. I believe under the contract there was an agreement that after the first 150 machines were sold, there would be $100 refunded on each machine to Brasile and Polivka or the corporations succeeding them.

Has that ever been repaid by you?

A. You are misstating it.

Q. Would you tell me what your idea of that arrangement is?

A. I won't tell you my idea. I can tell you what the contract says.

Q. I am sorry if I misstated.

A. That after 150 machines, the sum of $100 shall be returned to the corporation to be formed under the contract, which was the Preformed Carton Corporation, until the $25,000 was paid back; that $100 to be paid as each machine was shipped.

Beginning with machine No. 151, we made a check for $100 as each machine was shipped, and sent it to the Preformed Carton Corporation.

Q. Did you ever liquidate the $25,000 sum?

A. We liquidated all but $11,000 of it in that manner.

2274 Q. You paid back $14,000?

A. No, we paid back—yes, that is right, $14,000. There was an even $11,000 left at the time the contract was terminated.

Q. And you never paid back the $11,000?

A. No, sir.

2275 Q. Is there another provision in the contract relating to a minimum number of machines to be delivered in any one year?

A. Yes, I believe there is. I don't know that I have in my memory exactly what that provision is, but there was something like that.

Q. Is the number 150?

A. I think the contract will speak for itself. I think that is right.

Q. Is it your recollection that it is 150?

A. It is my recollection that it is 150.

Q. How many machines were delivered in the first year of the contract, if you recall?

A. The record would have to show that. I don't recall.

Q. Was it less than the 150 minimum?

A. I believe it was because there was a variation made. At that time there was insufficient orders placed within the time allowed for delivery to enable us to deliver 150, and there was some transaction, the details of which are a bit hazy in my memory right now, whereby that 150 was reduced by the Preformed Carton Corporation for the first year.

2276 Q. Do you mean to say that you could have delivered the 150 machines in the first year?

A. If they had been ordered soon enough.

Q. Soon enough?

A. Yes. There was a provision in the contract that after an order was placed, we were to be allowed a certain length of time for delivery. I don't remember what the figures were, but I do know that very near the end of 1952 they hurriedly placed a big blanket order, but the order was much too late to allow the proper time for delivery, and the number to be delivered in 1952 was then reduced by them so that they might not be in default on that particular point.

Q. We have mentioned, I think, at various times a State court suit. I think it might be helpful to the Court if I asked you one question about that suit.

Are you asking in that suit for damages for the unperformed portion of the contract?

By Mr. McCanna: I believe the pleadings in that case will speak for themselves.

By Mr. Clement: They aren't of record here. If you have them I will be glad to—

2277 By Mr. McCanna: We have gone on the premise here that the State court suit has no bearing on this case, and we haven't brought that into the case at all.

By Mr. Clement: This is only one question I am asking about it. I think it relates to this contract which directly relates to the question of commercial success.

By Mr. McCanna: Why don't you present it?

By Mr. Clement: I don't have a copy available. I thought the witness would recall what he asked for.

By Mr. Clement:

Q. Is it $300,000.00 that you are requesting?

A. Well, my attorneys—not Mr. McCanna, but our general attorneys, Ross & O'Keefe—prepared that complaint, and I can't say I remember everything that is in it.

I know we entered suit to try to collect our $65,000.00, and I believe we ask for damages, but I can't testify

2278 accurately as to the details of it right now, I believe.

Q. Did any of the machines which you produced have defective parts?

A. To the very best of my knowledge after a complete investigation no defects were shown in any parts.

2279 Q. In any of the machines you delivered?

A. That is correct. I know of many instances where they were not properly operated or our instructions were not followed—where they used hydraulic fluid in the

hydraulic system directly in violation of our instructions, or where their men were not properly trained. But I have never found a part which I believe was defective.

Q. Were the parts that you manufactured as spare parts interchangeable with the machines you had previously made?

A. Our parts were all made on jigs and fixtures and within the limits commonly used in the dairy industry, and with which I have been familiar for years, and our parts were interchangeable.

Q. My question was whether they were actually interchangeable.

A. Well, interchangeable is a matter of degree. By the standards that are commonly accepted in the dairy industry, our parts were interchangeable.

Q. Did you ever have any difficulty replacing parts because they were not interchangeable?

A. Our men have no difficulty. I have no difficulty.

Q. Did you ever receive complaints from any of
2280 the purchasers about difficulty in replacing parts because of the lack of interchangeability?

A. Never one that I couldn't straighten out by properly instructing the person, showing them how to put it in.

Q. Did you receive such complaints?

A. I have had people say they had difficulty putting a part on, but I have been able to tell them how to do it.

Q. By modifying the part?

A. No, by just properly putting it together.

Q. Who are your principal jobbers in the east as of the present time?

A. As of today?

Q. Yes.

A. United Dairy Machinery, Buffalo, New York.

Q. Just the biggest few.

A. That is what I am giving you.

Ralph Miller & Sons, Canonsburg, Pennsylvania.

Q. Was he one of the jobbers under the contract, if you know?

A. Yes, he was.

2281 L. E. Leach Company, Summerville, Massachusetts.

Those are the only three, sir, that are of any consequential size today. We are going more and more into direct sales in that area.

2282 Q. How about Mr. Holcombe, before he died?

A. He was a small jobber. He sold a few machines, not very many.

Q. Do you have any figure as to the number of machines that had been sold since the termination of the contract through jobbers which were previously jobbers under the contract, that is, jobbers of the Brasile group of defendants?

A. I have no breakdown of figures on that basis.

Q. Do you have any idea?

A. No. I will not guess on that. I have no idea.

Q. Mr. Mojonnier, returning now, briefly, to the question of when this device that is the subject-matter of the patent in suit was first put on sale, I believe that you testified previously that you had written a letter to Mr. Cabot of the American Can Company on March 18, 1947, that letter having been introduced as Plaintiff's Exhibit 26.

Was that the first offer of this machine on the market?

A. Well, I don't know that I consider that an offer of a machine. That is a sales letter and an attempt to
2283 get Mr. Cabot to let me make a machine to carry on an idea that I had and it was the first such letter that I wrote.

Q. It was a letter soliciting the future purchase of such a machine for the American Can Company, was it not?

A. It was a letter in attempt to get Mr. Cabot of the American Can Company to let me make a machine according to my ideas, to be purchased by the American Can Company or someone that they would refer us to.

Q. And that was in March of 1947?

A. Yes, sir. I believe it bears the date of March 18, 1947, doesn't it?

Q. Yes, sir. When was your patent application filed on this same device?

A. April 4th, wasn't it, 1949? The record shows that.

Q. More than two years later?

A. I believe that's right.

Q. Mr. Mojonnier, did Mr. Julius Zinn have anything to do with the original solicitation of sales of this machine incorporating the invention which is the subject-matter of the patent in suit?

A. Mr. Zinn was never given authority by me or by anyone in our organization to solicit sales of Mojon-
2284 nier-Dawson fillers.

Mr. Zinn is a promoter and he tried to promote his invention of a paper carton and he drew the filler into his promotion. He made many misrepresentations, in my opinion, in some of the things that he did.

He had no authority from me for any acts of that kind.

By Mr. Clement: I will ask the Reporter to mark this letter Defendants' Exhibit 62 for identification.

(Thereupon said document was marked Defendants' Exhibit No. 62 for identification.)

2285 Q. Mr. Mojonnier, I hand you a letter which I have just had marked Defendants' Exhibit 62 and ask you if you can identify that letter.

A. Yes, I can.

Q. What is it?

A. It is a letter that I wrote on August 28, 1946, which I believe was in response to a telephone call shortly before that from Mr. Zinn.

Q. It is a letter to Mr. Zinn?

A. Yes, sir.

Q. What is the date of the letter?

A. August 28, 1946, and I outlined very, very briefly to him the different types of fillers that the Mojonnier-Dawson Company was making at that time, which included vacuum fillers and an idea for a piston filler and I attached prints which I see are attached to the letter.

Q. Were any of those fillers represented in those prints, gravity operated fillers, if you recall?

A. Well, the two fillers and the prints that I pulled out of our file at that time, let's see—there are four prints attached.

Three of those refer to vacuum fillers of the 2286 type that we obtained with our purchase of the Ward Electric Products Company and one shows an idea that I had for adding a measuring chamber type, what I would call a displacement type of filler, to a vacuum filler frame.

Q. Would you please read the last—I believe it is the last paragraph of the letter. May I see it for a moment? Yes.

A. (Reading:)

"We anticipate hearing further from you after you have had a chance to look these over and combine them with some of your ideas on dispensing, closing and sealing mechanisms."

By "dispensing mechanism" I was speaking of a mechanism for dispensing cartons from a stack.

Q. Do you have a copy of that letter in your possession?

A. Yes, I believe that I do.

Q. Do you know why it wasn't produced at your deposi-

tion in December, 1954, in response to the subpoena which asked you for your correspondence with Mr. Zinn?

A. I don't know whether it was or wasn't produced.

2287 Maybe it hadn't been located at that time. I don't know.

There has been no attempt made of concealment of the thing. It was discussed thoroughly in the deposition of Mr. Zinn in this case.

Q. Was it mentioned in your response to my questions during that deposition about your original contract with Mr. Zinn?

By Mr. McCanna: The deposition was taken in this suit, not in the Zinn suit, in which all of this correspondence was produced and it was available to counsel.

By Mr. Clement: I am speaking, Mr. McCanna, of the deposition of December 6th, 7th and 8th, of Mojonnier-Dawson, which preceded the Zinn deposition by a considerable number of days and which included and was made pursuant to subpoena asking for correspondence between Mr. Mojonnier and Mr. Zinn relative to filler equipment.

By the Witness: Didn't your subpoena confine itself to filler equipment with timed orifice flow?

By Mr. Clement: Well, let us refer to the rec-

2288 ord of the deposition.

By the Witness: I don't know, but I know I never attempted to conceal this thing. It has been out in this case. It has been very thoroughly discussed.

2289 By Mr. Clement:

Q. On page 54 of this deposition of December 6th, 7th and 8th, I asked you the question:

"Q. Do you have any correspondence available in your records with Mr. Zinn prior to that time?"

I will read the question preceding that:

"Q. Returning now to Item No. 1 in the subpoena, and the correspondence and other negotiations with Mr. Zinn, can you tell me when it was that Mr. Zinn approached you as a representative of the Mojonnier-Dawson Company relative to the production of a filler mechanism?"

And your answer was:

"A. It is difficult for me to state that date that he first contacted me after I left Mojonnier Brothers Company, but I believe it was in the latter part of 1947."

And then I asked you this question:

"Q. Do you have any correspondence available in your records with Mr. Zinn prior to that time?"

You said, in answer:

2290 "A. The earliest piece of correspondence I have in my records is a letter from the Zinpak Company over the signature of J. A. Zinn, Jr., President, dated the 28th of August, 1947, stating that with great pleasure he now extends to me an invitation to attend a pre-showing of a demonstration of the Zinn package maker during the week beginning September 8, 1947, with details as to where he may be."

The rest of your answer is:

"I am sure that the circumstances of this were that Mr. Zinn had asked us, as well as asking many other manufacturers in the industry, if we could possibly produce a filler for his new carton, and telling us that his new carton was going to be a wonderful thing, and would solve all our problems."

The next question is:

"Q. Prior to that date had you discussed with Mr. Zinn the problem of producing a filler which would fill his cartons?"

Your answer is:

2291 "A. I have no written records of doing so, but my memory says that I did discuss shortly before this with Mr. Zinn an idea which I had for a filler, and thought that possibly I could develop that idea into a filling and sealing machine for his container."

A. Well, it is possible that what I have in my file is a photostat of this. Maybe it didn't turn up until Zinn's deposition. I don't know at this time.

By Mr. Clement: I will ask the Reporter to mark another letter for identification, as Defendants' Exhibit 63.

(Thereupon said document was marked Defendants' Exhibit No. 63 for identification.)

By Mr. Clement:

Q. Mr. Mojonnier, I hand you this letter that I have just had marked for identification as Defendants' Exhibit 63 and ask you if you can identify that letter.

A. Yes, I can.

2292 Q. What is it, please?

A. That is a letter I wrote to Julius Zinn on January 22, 1948, outlining a sealing unit.

just a minute. Now, there is another one on the
ne date. I mention a sealing unit for Fireside Marsh-
llow and apparently I enclose something with that and
tline the tentative price and tentative terms on the pro-
sed machine for handling Zinpak paper cartons.
Q. Does that letter bear your signature?
A. Yes, it does.
Q. Do you recall whether it was sent on or about the
te it bears?
A. I believe that it was.
Q. And is your answer the same to those questions with
ference to the previous letter we were discussing, De-
ndants' Exhibit 62 for identification?
A. I believe so.
Q. Do you recall what the Fireside Marshmellow pro-
sal was which you apparently enclosed with this let-
?
A. It was a proposal on a closing and sealing unit on
npak cartons which we hoped we might be allowed to
make.
93 Q. Did it inc'ude a filler?
A. No, sir.
Q. Do you recall whether you enclosed prints? It says,
e letter, I believe, that you were enclosing prints. Do
u recall what the character of the prints was?
A. Yes. They were two sketches, S-601 and S-602,
owing an idea that I had.
Q. I hand you, Mr. Mojonnier, two sketches marked
fendants' Exhibit 15-A and 15-B and ask you if those
e the originals of the drawings, the prints of which were
nt to Mr. Zinn in this letter we are now referring to?
A. They are.
Q. What do they show?
A. S-601 shows a schematic outline of a proposed closer
aler.
Q. Does it also show a filler?
A. No, sir.
And S-602 shows a schematic outline of a proposed filler
ser sealer, showing just an outline drawing of a filler.
Q. It does show the filler?
A. It shows an outline drawing of where the filler
94 shall be.
Q. Is the outline drawing similar to the outline
the filler bowl in Plaintiff's Exhibit 37?

A. Roughly so, not exactly. It shows a convex top and a convex bottom.

Q. You did have at this time other drawings of the filler, did you?

A. No.

Q. You did not?

A. This was all in my head at this time. This is all that I put on paper.

Q. This is—

A. Other than—wait a minute. I had a big print which has turned up in this thing, another outline drawing which—

Q. An outline drawing?

A. Which I prepared for Mr. Zinn in October, but it, again, shows an outline of a filler. It didn't show any details. It was not a drawing for manufacture.

By Mr. Clement: I will ask the reporter to mark this photostat. Mr. McCanna has agreed that we can use this photostat which is a photostat of one of the exhibits
2295 which was produced in the December deposition of 1954. It was identified in that deposition as Defendants' Exhibit Q.

I will now ask the reporter to mark it for identification as Defendants' Exhibit—

By Mr. Houghteling: Do you want to make this one 18-A?

By Mr. Clement: I beg your pardon?

By Mr. Houghteling: Do you want to make it 18-A?

By Mr. Clement: Defendants' Exhibit 64.

(Whereupon said document was marked Defendants' Exhibit 64 for identification.)

By Mr. Clement:

Q. Mr. Mojonnier, I will hand you this exhibit which has been marked Defendants' Exhibit 64 which is a photostat of a drawing and I will ask you if that is the one to which you just referred?

A. Yes, it is.

2296 Q. And I believe you said it is an outline drawing?

A. Yes, it is. It gives very little detail.

Q. Does it show the internal mechanism of the filler tank?

A. Schematically, partially, yes.

Q. Does it show a rod interconnecting a solenoid with an outlet valve?

A. Well, it shows more or less rectangular areas which is marked solenoid and housing, with no detail. It shows something that isn't labeled, that appears to be a rod and it shows a sleeve on the bottom of the tank which apparently was intended to illustrate, because I had the idea, of making a nozzle.

Q. What is the date on this drawing?

A. October 14, 1947.

Q. Is that date before or after your disclosure to the American Can Company?

A. Well, it is after the letter of March 18, 1947.

Q. And by that time you had given sketches or drawings to the American Can Company of your complete unit, is that correct?

2297 A. I gave the American Can Company the sketches which were attached in this case to that letter of March 18th. That's all that I gave them.

Q. But they illustrated the construction of the filler, is that correct?

A. Well, they speak for themselves. They illustrated the idea which I had, yes.

Q. They were much more complete than this drawing, is that correct?

A. I would say that they showed the idea a little more clearly than this.

Q. Now, just to recapitulate, what was the significance of this drawing which we have just been discussing, marked Defendants' Exhibit 64?

A. Well, just before that drawing was made, I had been in Long Island City and had seen Mr. Zinn's machine for making cartons.

I had seen a somewhat unsuccessful demonstration of the machine but it looked as if it had possibilities and he asked that I make a sketch, as nearly as I could, in drawing form, putting my ideas down on how a filler could be constructed to fill his carton. I had my draftsman produce that sketch showing my ideas.

2298 Q. Mr. Mojonnier, why was this letter not produced at the December deposition? Did you think I was talking about the Bowman machine?

A. Which letter are we talking about now?

Q. The last letter we just looked at, the letter of January 22, 1948, which has been marked Defendants' Exhibit 63. I will hand it back to you.

By Mr. McCanna: If your Honor please, all this was produced in the Zinn deposition and—

By Mr. Clement: That is not my question, Mr. McCanna.

By Mr. McCanna: Well, I think the reason shows there why it wasn't revealed earlier.

By Mr. Clement: What reason is that?

By Mr. McCanna: Well, the witness never found anything like that. When we subpoenaed Mr. Zinn, he produced all this material and then we made further searches.

By Mr. Clement: And Mr. Zinn produced these letters, is that correct?

By Mr. McCanna: I am not really certain. They
2299 are in there, in that deposition. We took depositions for three days, I think.

By Mr. Clement:

Q. Do you have a copy of this? Excuse me. Do you have a copy of this in your files, Mr. Mojonnier?

A. I am not sure now. I know I have seen it somewhere in this case. I am not sure whether I have a copy or whether I don't have a copy. I know I have seen it in this case.

Q. Did you have a copy in your file at the time of the December deposition?

A. I don't know.

Q. Have you seen your copy since the December deposition?

A. I don't know whether I even have a copy.

By Mr. Clement: I would like to introduce into evidence Defendants' Exhibit 62 which is the Zinn letter, the letter of Mr. Zinn of August 28, 1946, with the right to substitute photostats as agreed by stipulation.

By the Court: Any objection?

By Mr. McCanna: No objection.

By the Court: It may be received.

2300 Said document, so offered and received in evidence, was marked DEFENDANTS' EXHIBIT NO. 62.)

By Mr. Clement: I would like to introduce Defendants' Exhibits 15-A and 15-B for identification which are the two pencil sketches of the Fireside Marshmallow proposal.

By Mr. McCanna: No objection.

By the Court: They may be received.

(Said document, so offered and received in evidence, was marked DEFENDANTS' EXHIBIT NO. 64.)

2301 By Mr. Clement: I would also like to offer Defendants' Exhibit 63, the letter of January 22, 1948 to Mr. Zinn from Mr. Mojonnier.

By Mr. McCanna: No objection.

By the Court: It may be received.

(Said documents, so offered and received in evidence were marked DEFENDANTS' EXHIBITS. 15-A and 15-B.

By Mr. Clement: I would like to introduce Defendants' Exhibit 64. which is the photostat of a drawing labeled "Electronic filler assembly" dated 10-14-47.

By Mr. McCanna: No objection.

By the Court: It may be received.

(Said document, so offered and received in evidence, was marked DEFENDANTS' EXHIBIT NO. 63.)

By Mr. McCanna: Are the blueprints along with that, the blueprints that went with that letter?

By Mr. Clement: I do not have them, no—yes, they have been introduced as Defendants' Exhibits 15-A and 15-B. They are not attached to the letter.

The blueprints are attached to the letter of August 28, 1946, but the prints that were attached or sent with the letter of January 22nd have been introduced as Defendants' Exhibits 15-A and 15-B.

By Mr. McCanna: Yes, all right.

By Mr. Clement:

Q. Mr. Mojonnier, did Mr. Zinn solicit orders for 2302 your filler mechanism subsequent to this correspondence we have just been discussing?

A. I believe that Mr. Zinn talked to prospects for his carton about our filler. I don't believe that can properly be construed as soliciting orders because there was no intention for and no authority for any solicitation by him. There was never any thought of him entering into the sale of this filler.

Q. Did you receive any inquiries relative to the solicitations that he had made?

A. After he had been to different places talking about his carton and saying that there was a filler, I did receive some inquiries.

Q. I believe in connection with the portion of the deposition that I read, I read some testimony relative to a letter of August 28, 1947 from Mr. Zinn.

I hand you a letter and ask you if you can identify it as that letter.

A. Yes, that is the letter you were referring to, inviting me to Long Island City to see a demonstration of the Zinn package maker.

By Mr. Clement: I would like to introduce this letter as Defendants' Exhibit 12.

By Mr. McCanna: No objection.

2303 By the Court: It may be received.

(Said document, so offered and received in evidence, was marked DEFENDANTS EXHIBIT NO. 12.)

By Mr. Clement:

Q. Mr. Mojonnier, I hand you a letter marked Defendants' Exhibit 13 for identification, and ask you if you can identify that letter.

A. Yes, I can.

Q. What is it?

A. It is a letter that Mr. Zinn, signing himself "Julius", wrote to me under date of October 20, 1947, thanking me for coming to New York to see his machine.

Q. Did you receive that letter on or about the date it bears?

A. Shortly after the date it bears, I believe.

By Mr. Clement: I would like to offer this letter into evidence as Defendants' Exhibit 13.

By Mr. McCanna: No objection.

By the Court: It may be received.

2304 (Said document, so offered and received in evidence, was marked DEFENDANTS' EXHIBIT NO. 13.)

By Mr. Clement:

Q. Mr. Mojonnier, I hand you a letter marked Defendants' Exhibit 14 and ask if you can identify that letter.

A. Yes, that is a letter written to me by Julius Zinn, November 4, 1947, saying he has been out to the Golden State Company, has talked to Mr. Dorwaldt, and that he said certain things to Mr. Dorwaldt.

Q. About what?

A. About a filler, closer and sealer. Some of the things he said weren't facts, but that is what he said.

Q. Was he talking about your filler?

A. I believe so, referring to our filler, the idea I had for a filler.

Q. Would you read the second paragraph, Mr. Mojonnier?

A. Certainly. (Reading.)

"You, no doubt, will have a letter from Mr. Dorwaldt of Golden State, requesting information on fillers and other items that you manufacture."

2305 By Mr. Clement: I offer this letter into evidence as Defendants' Exhibit 14.

By Mr. McCanna: No objection.

By the Court: It may be received.

(Said document, so offered and received in evidence, was marked DEFENDANTS' EXHIBIT NO. 14.)

By Mr. Clement:

Q. Mr. Mojonnier, I hand you a letter previously identified as Defendants' Exhibit 16, and ask you if you can identify that letter?

A. Yes, sir. That is the letter written to me by Mr. Walter Dorwaldt of the Golden State Company, under date of November 3, 1947.

Q. What is the character of the letter generally?

A. He wants to know what I know about this filling machine that Mr. Zinn has been talking to him about.

He says:

"He stated that you had developed a filler, a closing machine, a heat sealer, and an automatic case filler."

These were amazing statements.

2306 Q. Did you receive that letter on or about the date it bears?

A. Yes, I did.

By Mr. Clement: I offer this letter into evidence as Defendants' Exhibit 16.

By Mr. McCanna: No objection.

By the Court: It may be received.

(Said document, so offered and received in evidence, was marked DEFENDANTS' EXHIBIT NO. 16.)

By Mr. Clement:

Q. I hand you a letter marked Defendants' Exhibit 17, Mr. Mojonnier. Can you identify that?

A. Yes, sir. That is a follow-up letter written by Mr. Walter Dorwaldt to me, wondering why I hadn't answered his letter of a month previous.

Q. Did you receive that letter on or about the date it bears?

A. I did.

By Mr. Clement: I offer this letter into evidence as Defendants' Exhibit 17.

By Mr. McCanna: No objection.

By the Court: It may be received.

2307 (Said document, so offered and received in evidence, was marked DEFENDANTS' EXHIBIT NO. 17.)

By Mr. Clement:

Q. Mr. Mojonnier, I hand you a carbon copy of a letter marked Defendants' Exhibit 18 for identification, and ask you if you can identify that letter.

A. Yes, this is a carbon copy of a letter I wrote on December 16, 1947 to Mr. Walter Dorwaldt of the Golden State Company, outlining to him the status of the development of my ideas at that time.

Q. Is there a quotation of price for the device in this letter to the Golden State Company?

A. Well, it says:

"At present it appears that two types of units will sell,"

and then two prices are mentioned.

Q. What are the prices mentioned?

A. $5,000.00 and $9,000.00.

Q. What was to be incorporated in the $5,000.00 unit?

A. A unit for a small dairy which would be hand fed for hand casing, embodying a filler, a conveyor, a closer and a sealer.

2308 For $9,000.00, a unit for the larger dairy that would dispense the cartons, fill, close, seal and case.

Q. What is the date of this letter?

A. December 16, 1947.

Q. Is that more than a year prior to the filing of your patent application?

A. Yes, it is.

Q. Is this as far as you know a true and correct copy of the letter you sent to Mr. Dorwaldt?

A. As far as I know it is.

Q. Did you send a drawing, sketch, print or any other representation of the device with this letter?

A. To the best of my recollection I sent one of those sketch prints, S-602, although I am not sure.

Q. I show you Defendants' Exhibit 64, which is a print, photostat of drawing, entitled "Electronic filler assembly," dated 10-14-47, and ask you if that possibly might be the drawing or print that was sent?

A. It might be.

Q. Do you have any recollection whether it was or not?

A. Not a real strong recollection. I might have
2309 sent tha.. I had that at that time, and I might have sent it.

2310 Q. Are there any other drawings or prints which it might have been other than this, Defendants' Exhibit 64, and the two drawings which we have identified as Defendants' Exhibits 15-A and 15-B, which are the drawings relative to the so-called Fireside Marshmallow proposal?

A. I don't believe so because this thing was all in my head at that time, and that is all I had put on paper to the best of my knowledge.

Q. Other than the American Can drawings, is that correct?

A. Other than the sketches that I had sent to Mr. Cabot.

Q. Is it your best recollection now that the prints which were sent with the December 16, 1947 letter to Mr. Dorwaldt of Golden State were one or more of these prints which we just have been talking about, or drawings which we have just been talking about, labeled Defendants' Exhibits 15-A, 15-B and 64?

A. One or more of those. I can't testify with exactness just which ones. It might have been all of them. I am inclined to believe it was just the one sketch of the smaller size, though I am not sure.

By Mr. Clement: I offer this letter, the carbon
2311 copy of the letter to Mr. Dorwaldt of Golden State, into evidence as Defendants' Exhibit 18.

By Mr. McCanna: No objection.

By the Court: It may be received.

(Said document, so offered and received in evidence, was marked DEFENDANTS' EXHIBIT 18.)

By Mr. Clement:

Q. I hand you, Mr. Mojonnier, a letter marked Defendants' Exhibit 15 for identification. Can you identify that letter?

A. Yes, sir, that is a letter written to me by Julius Zinn, January 9, 1948.

Q. Did you receive that letter on or about the date it bears?

A. I believe that I did.

Q. What is the substance of that brief letter?

A. He asked for a copy of a quotation which I sent to Golden State Company.

Q. Is that referring to the quotation which we just discussed in connection with your letter to Mr. Dorwaldt of December 16, 1947?

A. What I sent to Mr. Dorwaldt was not a quo-
2312 tation, but it refers to the letter which I had sent to Mr. Dorwaldt.

Q. Does the Zinn letter we are just inspecting, Defendants' Exhibit 15, use the word "quoted" or "quotation"?

A. Yes, it uses that word.

Q. Which word?

A. "Quoted."

By Mr. Clement: I offer this letter into evidence as Defendants' Exhibit 15.

By Mr. McCanna: No objection.

By the Court: It may be received.

(Said document, so offered and received in evidence, was marked DEFENDANTS' EXHIBIT NO. 15.)

By Mr. Clement:

Q. I hand you, Mr. Mojonnier, a photostat of a letter marked Defendants' Exhibit 19. Can you identify that?

A. It appears to be a photostat of a letter written January 26, 1948 to me by Julius Zinn, in which he acknowledges the letter I sent him, evidently dated January 22, one or more letters. He says "letters" rather than "letter."

2313 Q. I am handing you now Defendants' Exhibit 63, and ask you if that is the letter which he is referring to as having received?

A. I believe it is.

Q. Is the photostatic copy, Defendants' Exhibit 19, a copy of a letter which you recall receiving on or about the date that that bears?

A. Yes.

Q. What is that date?

A. January 26, 1948.

Q. Does this letter refer to the fact he has already dispatched the information which you gave him in the letter of January 22nd to the Container Corporation of America, who are working with Golden State?

A. He says that in the letter, yes.

Q. Does he mention any other company to whom he has sent disclosures?

A. He says:

"We have also sent copies of this to Mr. Freeman Higgins, in charge of the Mechanical Division of Container Corporation."

He says he wants some prints for forwarding to
2314 the Marathon Corporation and the Gaylord Corporation, evidently to show them what idea I had, what was in my mind for development.

Q. Is this prior to the one year before the filing of the patent application?

A. Yes, it is.

By Mr. Clement: I offer this photostat of a letter dated January 26, 1948 as Defendants' Exhibit 19.

By Mr. McCanna: No objection.

By the Court: It may be received.

(Said document, so offered and received in evidence, was marked DEFENDANTS' EXHIBIT NO. 19.)

2315 By Mr. Clement:

Q. Mr. Mojonnier, I hand you a photostat of a letter which is identified as Defendants' Exhibit 20, and ask you if you recognize or can identify the letter that that photostat represents?

A. Well, it seems to be a photostat of a carbon copy of a letter sent January 27, 1948 by Mrs. Mojonnier to Mr. Zinn, in which she apparently enclosed ten copies of each S-601 and S-602.

Q. Are those Defendants' Exhibits 15-A and 15-B, that S-601 and S-602?

A. Yes, if that is the correct number. I have seen them as defendants' exhibits.

Q. Did you send that letter on or about the date it bears?

A. Yes.

Q. The original?

A. Yes.

By Mr. Clement: I offer this in evidence as Defendants' Exhibit 20.

By Mr. McCanna: No objection.

By the Court: It may be received.

(Said document, so offered and received in evidence, was marked DEFENDANTS' EXHIBIT NO. 20.)

2316 By Mr. Clement:

Q. Mr. Mojonnier, I think we have already discussed the sale of the filler to the Bowman Dairy Company.

I hand you a photostat marked Defendants' Exhibit 21, and ask if you can identify that.

A. It appears to be a photostat copy of a page from our journal showing material purchases during the year 1948. This is only part of it, only one page of two that go to make up the set.

Q. I hand you a photostat marked Defendants' Exhibit 22, and ask you if you can identify that?

A. This appears to be some more of the same page. One is marked 1948, page 1, and one is marked page 1C. I think there is another page that goes in between because it jumps from Account 508 to Account 517.

Q. Is there any entry relative to the Bowman Dairy Company device?

A. There is an entry March 31 of $13.35, which would indicate we purchased materials in that amount during the month of March for Account No. 520, which previously had been a dead account, entitled Syruper, and is
2317 marked over in handwriting Electromatic.

Does that syruper refer to the American Can mechanism that you were previously developing?

A. Well, I believe I have testified that we were discussing with American Can the development of a vacuum syruper, and we set up that column and that Account No. 520 in our journal to cover that. But nothing was ever done about it. The account was a dead one.

Q. Is there a date in connection with that entry?

A. Well, it is in the line marked March 31, which dates it.

Q. What is the next entry in that column?

A. April 30.

Q. And the next amount that is entered?

A. $237.59.

Q. What is that amount, if you recall?

A. I beg your pardon?

Q. What is the nature of that entry, if you recall?

A. Well, that means that during the month of April we purchased material for use on Electromatic fillers
2318 in the amount of $237.59.

Q. What is the date of that entry?

A. April 30, 1948.

Q. That refers to the machine that was made and sold to the Bowman Dairy Company, is that correct?

A. I couldn't testify for sure on that. It might refer to material that we had purchased for making another machine because by that time we were soliciting other business on this filler which I then made for Bowman Dairy Company.

By Mr. Clement: I offer into evidence the two photostatic copies we have just been discussing as Defendants' Exhibits 21 and 22.

By Mr. McCanna: No objection.

By the Court: They may be received.

(Said documents, so offered and received in evidence were marked respectively DEFENDANTS' EXHIBITS NOS. 21 and 22.)

By Mr. Clement:

Q. Mr. Mojonnier. I hand you a photostatic copy of three sheets of a journal, and ask you if you can identify those?

2319 A. Yes, I can. These appear to be photostatic copies of pages from our sales journal for the year 1948.

Q. Do they contain any entries relative to the Bowman Dairy machine sale?

A. Yes, they do.

Q. What is the nature of that entry or those entries?

A. There is an entry as of April 30, 1948.

Q. What number is that entry?

A. It is on line, well, it is under Account No. 420.

Q. That is on the third page?

A. On the third page, and it shows that we entered sales for the month of April of $385 in the Account No. 420 marked Electromatic.

Q. What is the number of that entry on the lefthand margin?

A. The lines are burned out here in the photostat, but it appears that it is approximately opposite line 4 or between line 4 and line 5.

Q. Is it opposite the fourth entry in column 418, directly opposite?

A. No, it is a little below it.

2320 Q. In your best judgment is that an entry on No. 4 or No. 5?

A. Well, both No. 4 and No. 5 are April entries, and it is definitely an April entry.

Q. In your best judgment is it an entry on No. 4 or No. 5?

A. I think it is opposite No. 5. I think it was taken out of our—

Q. You say it is opposite No. 5?

A. I am not sure. It may be opposite No. 4. No. 4 shows an entry April S55, which means sales of 55.

2321 Q. We are presently talking about the third page of this journal and the entry on the third page in what column?

A. Well, it is in column under 420. You are talking about line, aren't you?

Q. Yes, I am now talking about which line it is opposite.

A. I would say it is between lines 4 and 5. Whether it is intended to be under 4 or 5, I can't say. They are both April entries.

Q. Is it closer to No. 4 or to No. 5?

A. I think it is closer to No. 4.

Q. Now refer to the first sheet of these three sheets and see what date is opposite No. 4.

A. Well, it says "April," if I read it correctly. It says "S-55."

Q. "April S"?

A. Yes. You see, we put these down here as April and here is "S-43, S-46, S-50, S-55."

Q. Isn't that a 3?

A. I don't believe so.

Q. Is it similar to the "3" in "April 30"?

A. No.

Q. It isn't?

2322 A. No.

Q. It isn't similar to any of those April 30 entries?

A. No. It says "April S-55." That is the April sales entry.

Q. Is that customary, to use an "S" instead of a numeral?

A. Well, "S" means "Sales Ledger." It is an entry from the sales ledger, page 55. In January the entry was from the sales ledger, page 43. February, S-46. March, S-50. April, S-55.

Q. What are the next three entries?

A. Then there is one from Cash Receipts, an adjusting entry marked "CR-155." Another one, General Journal, marked "J-66." Another one, an adjusting entry, marked "S-51."

Q. Did you make those entries yourself?

A. No.

Q. Do you know who did?

A. Oh, we had a bookkeeper at that time. I believe his name was Walter Ratska, or something like that. I believe that is his handwriting.

Q. Both the entry "April S" you say on No. 4 and the succeeding three entries were made by the same person?

2323 A. I am not sure that they are. I know they are correct entries in our books, but I am not sure they are made by the same person. One is printed and the rest are written.

By Mr. Clement: Do you have the originals of these here Mr. McCanna?

By Mr. McCanna: No, I don't, but I can get them this afternoon.

By Mr. Clement: I wish you would produce them since there is some question about that letter "S" under entry 4.

I don't believe these three sheets have been marked. I will ask the reporter to mark them—

By the Witness: There is no question, Mr. Clement, that that is an April entry.

By Mr. Clement: I am only questioning whether that is a "3" or an "S".

By the Witness: All right. He can get the originals.

By Mr. Clements: I will ask that these be marked Defendants' Exhibits 65-A, 65-B and 65-C for identification.

2324 (Whereupon, said documents were marked Defendants' Exhibits Nos. 65-A, 65-B, and 65-C, respectively, for identification.)

By Mr. Clement: I offer these three exhibits into evidence.

By Mr. McCanna: I have no objection.

By the Court: They may be received.

(Said documents, so offered and received in evidence, were marked, respectively, DEFENDANTS' EXHIBITS NOS. 65-A, 65-B, and 65-C.)

By Mr. Clement: It is my understanding you will produce the original page one of these three, and that will be Defendants' Exhibit 65?

By Mr. McCanna: Yes, I believe I have those.

By Mr. Clement:

Q. I hand you, Mr. Mojonnier, a letter marked for identification Defendants' Exhibit 42, and ask you if you can identify that letter.

A. Yes, I can. It is a letter written March 9, 1948 by Mr. A. E. Geiss of the Engineering Department of Bowman Dairy Company to me, transmitting an order for
2325 two tables, on one of which I was to mount the filler for whipping cream that we were at that time building for him.

2326 Q. Did you receive that letter on or about the date it bears?

A. Yes, I did.

By Mr. Clement: I offer this as Defendants' Exhibit 42.

By Mr. McCanna: No objection.

By the Court: It may be received.

(Said document, so offered and received in evidence, was marked DEFENDANTS' EXHIBIT NO. 42.)

By Mr. Clement:

Q. I hand you, Mr. Mojonnier, a photostat of a letter dated March 15, 1948, and ask if you can identify that letter.

A. It appears to be a photostatic copy of a carbon copy of a letter I wrote March 15, 1948, to Mr. Geiss of Bowman Dairy Company acknowledging his order for two stainless steel tables and acknowledging his constructions—or rather, instructions as to the mounting of the filler which we were then building for him on one of these tables.

Q. Do you recognize that as a true copy of the
2327 letter you sent to Mr. Geiss on or about the date it bears?

A. I believe it is.

By Mr. Clement: I will offer this—it has not been marked.

I will ask the Reporter to mark this letter Defendants' Exhibit 66 for identification.

(Thereupon said document was marked Defendants' Exhibit No. 66 for identification.)

By Mr. McCanna: No objection.

By the Court: It may be received.

By Mr. Clement: And I offer it into evidence.

By the Court: It may be received.

(Said document, so offered and received in evidence, was marked DEFENDANTS' EXHIBIT NO. 66.)

By Mr. Clement:

Q. Mr. Mojonnier, I hand you two photostats, Defendants' Exhibits 28 and 29 and ask you if you can identify what they are.

A. They appear to be photostatic copies of the two sides of the colored circular put out by the Illinois
2328 Creamery Supply Company in the fall of 1948.

Q. I believe we have already had some testimony regarding that exhibit. Is there a statement as to patent protection appearing on that, relative to the device illustrated therein?

A. There is a statement that says:

"Bottles and fillers are covered by patents issued and pending."

Q. And this was distributed when?

A. I believe Mr. Rosen testified he prepared it for the 1948 dairy show in November.

Q. You don't know when it was actually distributed?

A. Oh, yes, I think I could say honestly that to my own knowledge I know it was distributed then. I saw him distribute some.

Q. You don't know whether it was distributed prior to that date?

A. I know it wasn't. I know he rushed down to the dairy show with them. They were barely printed in time.

By Mr. Clement: I offer these two exhibits, De-
2329 fendants' Exhibits 28 and 29 into evidence.

By Mr. McCanna: No objection.

By the Court: They may be received.

(Said documents, so offered and received in evidence, were marked respectively DEFENDANTS' EXHIBITS NOS. 28 and 29.)

By Mr. Clement:

Q. Mr. Mojonnier, I hand you for identification Defendants' Exhibits 25 and 26 and ask if you can identify those.

A. Oh, I believe we have discussed these. These appear to be photostatic copies of a carbon copy of a letter I wrote to the Page Milk Company on February 9, 1948.

2330 Q. Is there a price quotation in this letter?

A. There is a quotation in this letter of $4750.00 with a qualification that this is a developmental item and that that may be changed.

Q. What does that $4750.00 include?

A. A filling and sealing unit which consists of a conveyor, a space allowed for hand feeding so that a dispenser, or, as they call it, a nester, can be developed, that can be attached; a filling mechanism; a closing mechanism; a heat sealing mechanism and a casing table.

Q. It does include a filling mechanism, is that correct?

A. Yes, it does.

Q. Do you recognize that photostat as being a true copy of the letter you sent to Mr. Larsen on or about the date it bears?

A. I believe so. Isn't that a photostat?

Q. The letter—

A. Which I submitted to you?

Q. On your deposition, yes.

By Mr. Clement: I offer this into evidence as Defendants' Exhibits 25 and 26.

By Mr. McCanna: No objection.

2331 By the Court: They may be received.

(Said documents, so offered and received in evidence, were marked, respectively, DEFENDANTS' EXHIBITS NOS. 25 and 26.)

By Mr. Clement:

Q. I hand you, Mr. Mojonnier, a letter—before I hand it to you, I will have it marked for identification as Defendants' Exhibit 67, letter of February 4, 1948.

(Whereupon said document was marked Defendants' Exhibit No. 67 for identification.)

By Mr. Clement:

Q. And I ask you if you can identify the letter of which that is a photostatic copy.

A. Yes. It appears to be a photostatic copy of a letter from Fage Milk Company, Pittsburgh, Pennsylvania, dated February 4, 1948, to Mojonnier-Dawson Company, stating that they are interested in never leak containers, would like to have some information on filling, sealing and closing equipment.

Q. Did you receive that letter on or about the date it bears?

2332 A. I believe I did.

Q. And was that letter we just discussed, Defendants' Exhibits 25 and 26, the letter which you sent in response to that inquiry?

A. Yes, it was.

Q. And the date of your inquiry is when?

A. February 4, 1948.

By Mr. Clement: I offer this into evidence as Defendants' Exhibit 67.

By Mr. McCanna: No objection.

By the Court: It may be received.

(Said document, so offered and received in evidence, was marked DEFENDANTS' EXHIBIT NO. 67.)

By Mr. Clement:

Q. And this, again, was more than a year prior to the filing your patent application, is that correct?

A. Yes, sir.

By Mr. Clement: There seems to be some question as to whether Defendants' Exhibit 53 has actually been received in evidence and this is the statement from the Mojonnier-Dawson Company relative to the amounts owing that company from Preformed Carton Corporation.

2333 I would like to offer it into evidence now just to make sure it is received. It is not marked as having been received.

By Mr. McCanna: I believe that has been offered and it has not been objected to.

By the Court: Well, it may be received.

(Said document, so offered and received in evidence, was marked DEFENDANTS' EXHIBIT NO. 53.)

By Mr. Clement: I have one other exhibit which has not been introduced, which I would ask Mr. Mojonnier to identify, Defendants' Exhibit 32, which is the copy of the Claim 6 of the original application for the reissue patent which we have discussed previously with Mr. Mojonnier and he has testified to it.

By Mr. Clement:

Q. Do you recognize that one as the one we have been discussing?

A. That is your copy. Yes, sir, it was discussed.

By Mr. Clement: I offer this in evidence as Defendants' Exhibit No. 32.

By Mr. McCanna: No objection, just subject to
2334 any correction. I haven't checked that against the file but I am not objecting to it.

By the Court: Very well. It may be received, subject to your checking it and pointing out any imperfections in —how much time, two days?

By Mr. McCanna: Yes.

(Said document, so offered and received in evidence, was marked DEFENDANTS' EXHIBIT NO. 32.)

By Mr. Clement: That is all. You may cross-examine. Oh, we called Mr. Mojonnier under the statute, as I recall.

By Mr. McCanna: There is no cross-examination, your Honor.

By the Court: Very well.

By Mr. McCanna: I would like to have an opportunity to consider all this for rebuttal, though.

By the Court: For what?

By Mr. McCanna: For our rebuttal.

By the Court: Very well.

2335 You do not desire to cross-examine him?

By Mr. McCanna: At this time, yes, there is no cross-examination, your Honor.

By the Court: Very well.

By Mr. Clement: I would like to call Mr. Brasile.

2336 MAURICE J. BRASILE, one of the defendants herein, called as a witness on his own behalf, having been previously sworn and examined, testified further as follows:

Direct Examination by Mr. Clement.

Q. Mr. Brasile, I believe you have already testified, briefly, about the disclosure which you made to Mr. Mojonnier concerning the idea of preforming the Pure-Pak cartons and building a filler opening and sealing unit for use with them.

Do you recall when it was that you first talked to Mr. Mojonnier about this idea?

A. Early in October, 1951.

Q. Did you have more than one discussion with him about it at approximately that same time?

A. I would say around two or three during the month of October.

Q. Was the idea as it finally was developed, the same as when you first saw him? Did you make any changes in the idea?

A. No. When I first talked to Mr. Mojonnier, the idea was to open the pouring lip of the container and re-
2337 wax the pouring lip and that is the way it would be.

By the Court: That is p-o-u-r-i-n-g l-i-p.

By the Witness: There are some in the jury room, sir.

By Mr. Clement:

Q. Well, in any event, that form differs from the form that is being discussed?

A. Yes. That is the pitcher pour type.

Q. They are pitcher pour?

A. Yes.

Q. And they have a different opening top?

A. Different method of opening and pouring, yes.

Q. What is the construction?

A. It is a tab in the center part of the container.

Q. A tab?

A. Tab, that is right, in the center part of the container that a person would lift the tab and it would automatically open.

By the Court: Here is a picture of one.

By the Witness: We have one in the jury room.

2338 By Mr. Clement: I think Mr. Mojonnier went to get one.

By the Witness: Oh, there is some on that machine there (indicating).

By the Court: Is this what you are talking about here (indicating)?

By Mr. Clement: That is right, sir.

By the Court: There is one right there (indicating).

By Mr. Clement:

Q. In any event, the mechanism for opening that type, was it the same as for the later type?

A. No, sir.

Q. I hand you a carton that Mr. Mojonnier has just given me and ask you if that is the type with the lifting tab on the side?

A. That is right.

By Mr. Clement: I will ask the Reporter to mark this

lifting tab type of carton as Defendants' Exhibit 68 for identification.

(Thereupon said carton was marked Defendants' Exhibit No. 68 for identification.)

2339 By Mr. Clement:

Q. Did the problems connected with this type of container which we have marked as Defendants' Exhibit 68 differ from the problems of preforming, opening and filling later cartons that were used?

A. There were some problems, but the Ex-Cell-O Corporation was very much against it.

Q. So far as the physical structure of the container is concerned, did it require a different type of opening?

A. Oh, yes, sir.

Q. Did you have subsequent conversations with Mr. Mojonnier about the problem of opening?

A. Well, we discussed it, yes, sir.

Q. When did you first discuss the second type, the pitcher pour carton, as illustrated by Plaintiff's Exhibit 53?

A. It was either—I think it was about a week later, after our visit to Ex-Cell-O Corporation. What I mean by "our visit" is Mr. John Polivka and I visited the Ex-Cell-O Corporation.

2340 Q. Did you demonstrate to Mr. Mojonnier any ideas of yours concerning the opening of that carton?

A. Which carton, sir?

Q. The last one we were discussing, the pitcher pour, that type.

A. Well, we continued with the pouring lip for quite some time. The pitcher pour is just new.

Q. Well, just tell us what type of carton you finally ended up with in your Pure-Pak work.

A. The start, the beginning?

Q. Yes.

A. It was the tab type.

Q. When did you change to a different type of opening—or, strike that.

Did you discuss different types of opening mechanisms with Mr. Mojonnier?

A. About a week later, sir.

Q. What type was that?

A. A claw type of opening.

Q. A claw type?

A. Yes.

Q. Did you demonstrate what you meant by a claw type to him?

A. Well, I demonstrated with my hand.

2341 May I have a container?

Q. Yes.

(Handing container to the witness.)

A. Just to show you, I showed Mr. Mojonnier something like this, by grabbing it with the hand like this (illustrating) and bending it down and it would open, the container.

Q. Did you do anyhing further relative to that opening mechanism?

A. Did I?

Q. Yes.

A. Well, Mr. Mojonnier immediately made—well, it was—

By the Court: Like a pair of cinder tongs?

By the Witness: Pardon?

By the Court: A pair of cinder tongs?

By Mr. Clement:

Q. A pair of cinder tongs, the Judge suggests.

A. No, no. That wasn't done immediately. Mr. Mojonnier took a block of aluminum and had it milled out and put a couple of fingers with spring-loaded fingers that would catch the inside of the container, into a block, and I

2342 think we put that onto about, oh, on 25, about 15 or 25 machines. I don't know the exact amount.

That was quite an expensive operation. Oh, I visited Mr. Mojonnier one afternoon and brought the idea. I took a piece of metal—

Q. Was that shortly after you had started your negotiations with him?

A. Oh, I would say three months or so after, and I showed him that we could bend a piece of metal on a vise, which I did, and he helped me do so, and that is how we got this claw arrangement that is on the machine today.

Q. Did you make any improvements in the machine or suggest any improvements in the machine after it was first designed by Mr. Mojonnier? With your suggestions, were there any changes made in the machine during the period of the contract?

A. No.

By Mr. McCanna: I think he ought to let the witness tell what he did rather than suggest the answers to him.

By Mr. Clement:

Q. Did you do anything more relative to the structure of the machine in the period of the contract, your-
2343 self?

A. To that machine?

Q. To the machine that was being sold under the contract?

A. Myself?

Q. Yourself.

A. No, sir.

Q. Did Mr. Mojonnier make any changes in the construction of that machine after he had adopted that claw type opener?

A. Yes, sir.

Q. What were they?

A. Well, we first started out with a hand operated stapling head and from the hand operating stapling head, he introduced this foot pedal hydraulic unit and then changed the structure of the stapling assembly.

2344 Q. What type of change was that?

A. I didn't get that question.

Q. Excuse me. What type of change was that?

A. Well, it eliminated a man tying up one of his hands, which he would adapt to the operation above the table and use of his foot in stapling.

Q. Did you have anything to do with that change?

A. No, sir.

Q. Were there any other changes made?

A. No, sir.

Q. Were there any complaints in the trade relative to the construction of the machine that you were selling?

A. Well, the complaints were top leakers, top leakers of the containers and inaccurate fill, in various parts of the country and, through the board of health departments, it was the way the operators handled the container to get it into the stapler.

Q. That was objected to?

A. Pardon me, sir?

Q. You just said "the way". Was that objected to?

A. Yes.

2345 Q. By the boards of health?

A. Various boards of health.

Q. What type of float valve did the original machine that you sold under the contract have?

A. Well, I think it is the same thing they have in here.

Q. Did you have any difficulty with that?

A. Well, in various operations in plants, well, you see, we were selling the small dairyman that was using vat pasteurization and most of their coolers were set off the floor. They weren't raised high off the floor, where it would be gravity fed. Most of these dairies had a little centrifugal pump to pump their milk either from the vats or from these coolers that were set off the floor and they would require you to get an accurate fill. We had to put a surge tank ahead of the filler.

Q. A surge tank?

A. A surge tank, sir, which was an added expense.

Q. I think my original question was whether you had complaints from the trade. Did you have any com-
2346 plaints relative to the valve that you have just been discussing?

A. Yes, sir, we did. It was hard to clean, mostly, from the health department's standpoint.

Q. Did it operate satisfactorily under the conditions in the trade, did it operate satisfactorily, the float valve?

A. Well, it all depends on what type of feed we had going into the filler. If it was plain gravity feed, it operated satisfactorily.

Q. Did it operate satisfactorily—what other types of feeds are there?

A. Well, there is pump feeding and there is high surge tanks in various plants.

Q. Do you have any idea what percentage of dairies have pump feeding?

I am limiting our question to the small dairies.

A. Limiting our question to small dairies?

Q. Yes.

A. Today most of them have.

Q. Most of them?

A. That is right.

Q. Well, what about the time when you were operating under this contract? What percentage of small dairies
2347 had a pressure feed as you have described it, rather than a gravity feed?

A. Most of them.

Q. Most of them?

A. Yes, sir.

Q. Did you do anything about that problem of the float valve?

A. Well, I suggested that to Mr. Mojonnier and then

he went, he advised us to sell the dairy a surge tank which was an added expense and sometimes, a surge tank, we had to set it so high that it wouldn't fit into a dairy.

Q. Did you do anything else?

A. Well, then I started to develop a special intake valve for it.

Q. Did you do anything other than that in any later period relative to possibly improving the machine?

A. While I was with Mojonnier-Dawson?

Q. Yes, during the period of the contract.

A. Yes, sir. The way to open and close the container.

Q. Anything else?

A. And the use of a different type of staple.

2348 Q. I call your attention to Defendants' Exhibit 33 over there (indicating). Does that have any bearing on the question I asked you?

A. Yes, sir.

Q. When was that constructed?

A. During the period of early January and up to June.

Q. And what was the principal purpose of that Defendants' Exhibit 33?

A. It was to open and close, heat, seal and staple the Pure-Pak container.

Q. Will you step down for a moment, Mr. Brasile, and show us in a little more detail what the significance of that structure in Defendants' Exhibit 33 is regarding the movement of the cartons through it?

A. On that machine there (indicating)?

Q. Yes, sir, just generally.

A. The operator would set the container in the pusher box—the carton will be moved. The operator will set the container in the pusher box between these two forefingers and then we had a—this isn't altogether.

Q. Yes. Just generally.

2349 A. And then we had a shoe, a finger that extended off of this cover and when these bars would move forward, they would move the carton forward and open the container like so (illustrating).

And then, this would come back (illustrating) and catch the next container that we would drop in and then it would keep on continuing and come back and catch again (illustrating).

Well, they accumulated all the way along the line.

Q. Mr. Brasile, are you now moving the horizontal bars

which have the fingers on them that are spring pressed into an open position?

A. Yes, sir.

Q. And what do those fingers do?

A. Well, they would hold the container and push the container evenly along the line.

Q. On both strokes of that bar, or one?

A. No, just the forward motion because the back motion would be—would catch the next container.

Q. I see. Go ahead with your discussion.

A. Well, when it got in this position (illustrating), the carton would be completely open, just like this (illustrating), and then the nozzle would drop into the container
2350 and would dispense milk and then, as it continued on—well, with the pusher bar, as it continued on, it would start closing the container and it would continue on until it was completely closed and then it would enter—we had a heater bar which was thermostatically controlled, a heater bar with thermostatic control.

We would preheat the wax before it entered the stapler under pressure, which would give it a good seal.

And then, when it got out to the end here (illustrating), well, before it got to the end, the operator would pick up this container and place it—

Well, here was the motion of the operator: He would take an empty container, put it here, and take one off and put the container in here and take one here (illustrating).

Now, to go to different sizes, we would raise this base (indicating), raise it up towards the nozzle and that would give you immediately changeover for different sizes.

Q. Would you raise both ends of that track?

A. Yes, sir, both ends would raise.

Q. Is that the track that normally rests on top of
2351 the table?

A. That's right.

Q. You mentioned the fact that the dispensing nozzle on the filler would drop into the carton. How was that dropped?

A. Well, we had an arm attached on this shaft here (indicating) and that shaft had a cam screwed on another cam. It would work up and down and drop the nozzle into the container.

2352 Q. Did you have any ideas or did you know of any ideas relative to how to actually dispense the liquid from that container?

A. At this time?

Q. Yes.

A. Not—no, sir, not when we were building this.

Q. Well, let me make it clear. You were selling the Mojonnier-Dawson machine at that time?

A. That is right. We had a filler at that time which was the Mojonnier-Dawson.

Q. And what was the relation of that filler to this device?

A. Well, there is no relationship at all. We were just trying to improve the operation to eliminate these—eliminate the handling of the container by the operator.

Q. What type of filler had you originally intended to use with that?

A. The Mojonnier-Dawson.

Q. And the Mojonnier-Dawson didn't have a dropping nozzle, did it?

A. No, sir. We first started to use a pedestal on here. It is still here. The pedestal is still here, to raise the
2353 container up into the nozzle. We had the pedestal and it is still here to raise the container up into the nozzle.

Well, it didn't work out so good.

Q. What did you do then?

A. Well, then we designed this nozzle which we thought, with a sleeve—

Q. Is the sleeve there?

A. This right here, sir (indicating).

Q. Go ahead.

A. Which would direct—we attached that to the Mojonnier filler. The only thing the sleeve would do was, it would direct the flow of the milk out of the Mojonnier filler into the Pure-Pak carton.

Q. How did you plan to energize the timer on the Mojonnier filler?

A. Well, energize the Mojonnier filler?

Q. You said you were going to use the Mojonnier filler with that. Did you have any idea as to how the filler would be tripped?

A. Well, I guess it would be tripped off a micro switch. We didn't give that much thought at that time because that was already built.

Q. But the carton tripped the switch in the
2354 Mojonnier filler, is that right?

A. That is right.

Q. And what would trip it? If you put the Mojonnier filler on there, what would you do to make it trip, if you know?

A. Now I would say you could put an arm and as the carton passed by, it would hit a micro switch and start to activate the nozzle.

By the Court: We will recess at this time until 2:15 this afternoon.

By the Marshal: This Honorable Court now stands at recess until 2:15 this afternoon.

(Whereupon at 12:15 o'clock p. m., on Wednesday, June 8, 1955, a recess was taken until 2:15 o'clock p. m. of the same day.)

* * * * *

2356 And thereupon the following further proceedings were had herein:—

By the Clerk: Case on trial.

By the Court: Proceed.

MAURICE J. BRASILE, one of the defendants herein, called as a witness on his own behalf, having been previously duly sworn and examined, resumed the stand and testified further as follows:

Direct Examination (Ctd.) by Mr. Clement.

Q. Mr. Brasile, at the close of this morning's session, you were demonstrating Defendants' Exhibit 33, and I believe you were talking about the ways in which the carton was being raised to the nozzle of the dispensing tank.

A. Yes, sir.

Q. Were there any other ideas you had about methods of bringing the carton and dispensing nozzle together?

A. Yes. The reason for that was the present machines we were selling, which were the Mojonnier-Dawsons, every time there was a change of various sized cartons, we
2357 had to lower the complete tank to the size of the container that was being used.

That was kind of a hazard in the dairy because a milk line would be attached to the tank, and lowering the tank would lower the line, which was already tightened to the outlet of milk in the tank, the pasteurizing tank, and then to the filler bowl there.

Q. How would you lower the tank? Can you demonstrate on Plaintiff's Exhibit 37 just briefly, or tell us, either one.

A. Plaintiff's Exhibit 39.

Q. Plaintiff's Exhibit 39, fine.

A. You have to hold this up (demonstrating) and loosen these bolts and lower it down.

Q. Did you do anything with reference to the supply of cartons for these machines during the period of the contract?

A. Yes. I contacted the Ex-Cell-O Corporation very frequently to encourage them to release preforming machines to various jobbers and to ourselves to enable these various jobbers to form empty Pure-Pak containers,
2358 which would enable them to supply to the dairy who was purchasing the Mojonnier-Dawson filler, and also encourage the Ex-Cell-O Corporation in enabling dairies who already had their preformers and who had a short-time run on the preformer, which was very costly, because they had to pay a high royalty to the Ex-Cell-O—by them forming empty containers it would bring their cost of operation lower and the royalties lower.

By Mr. Clement: I will ask the Reporter to mark this document for identification as Defendants' Exhibit 69.

(Thereupon said document was marked Defendants' Exhibit No. 69 for identification.)

By Mr. Clement: And the second type-written document, I will ask be marked as Defendants' Exhibit 70 for identification.

By Mr. Clement:

Q. I hand you Defendants' Exhibit No. 69 for
2359 identification, and ask you if you can tell me what that document is.

A. Yes. This is an Ex-Cell-O Corporation Pure-Pak lease to a dairy that bottles, that forms and bottles their containers.

Q. Is there any provision in there about the use of the machine?

A. Yes, there is.

2360 Q. What does it say?

A. Under "permitted uses" it says:

"Permitted uses: to use the machine and containers only for the purpose of bottling and packaging milk, milk products and other edible and drinkable products commonly

associated with the fluid milk business or that of its subsidiaries, provided, however, that lessee may package such products for other dairies so long as such products are packaged under the brands of such other dairies."

By Mr. McCanna: Your Honor, I don't know what this could have to do with our case. How would it be relevant, this lease from Ex-Cell-O?

By Mr. Clement: Your Honor, we are attempting to show Mr. Brasile's efforts in setting up this business of the filling of these paper containers with the Mojonnier-Dawson machine that is in suit, or the machine that incorporates the invention.

By the Court: Very well. Overruled.

2361 By Mr. Clement:

Q. Mr. Brasile, I hand you Defendants' Exhibit 70, and ask you if you know what that is.

A. Yes. This is a supplemental agreement. After many visits to the Ex-Cell-O Corporation—

Q. By whom?

A. By myself, and meetings with Mr. Glenn Bixby, their president, and George Scott, their vice-president, and George Hoffman, their sales manager, this supplemental agreement was agreed upon that they would issue it with the regular release.

Q. What does that agreement permit the lessee to do?

A. It changes the paragraph under "Permitted Uses," and recites the paragraph 3 of the lease, enlarging the permitted uses to:

"Use the machine only for the purpose of forming empty containers only for use in dairy filling such containers remoteiy from the released machine."

By the Court: Let me see that. Where are those last words?

By Mr. Clement:

Q. What are you reading from, the first page?

2362 A. No, this paragraph.

By the Court: All right.

By Mr. Clement:

Q. Prior to this time, Mr. Brasile, were the Pure-Pak cartons available to the small dairyman in any sizable number; that is, prior to the time that you succeeded in getting these machines released for preforming only?

A. Well, we were only given the right to form in the

dairy plant for the first 25 machines on an experimental basis.

Q. My question was: Prior to the time that you got this right were Pure-Pak cartons available to the small dairyman in a preformed state.

A. No, sir.

2363 By Mr. McCanna: What is the date of that?

By Mr. Clement: This is just the sample form. This is not dated.

By Mr. McCanna: What time are you talking about?

By Mr. Clement:

Q. What time were we referring to, Mr. Brasile, when you say the cartons were not available?

A. They were available for the first twenty-five operations only and that was up to about June of 1952 and then this was the status of that agreement thereafter.

Q. Let me be sure I understand you. There were certain machines available before this agreement was modified, is that correct? Is that what you said?

A. No, sir. There was only one plant and that was in Antioch, Illinois, available.

Q. For what?

A. Forming empty Pure-Pak containers.

Q. At what time? When was this?

A. Well, up to June 1st of 1952.

Q. I see. And after that date?

2364 A. That was agreed thereafter, there was many more.

Q. Pursuant to a change in this agreement we have been discussing?

A. That is correct.

Q. Defendants' Exhibit 69?

A. Yes, sir.

By Mr. Clement: I offer Exhibit 69 into evidence as Defendants' Exhibit 69.

By Mr. McCanna: No objection.

By the Court: It may be received.

(Said document, so offered and received in evidence, was marked DEFENDANTS' EXHIBIT NO. 69.)

By Mr. Clement: I offer the Exhibit 70 into evidence.

By Mr. McCanna: Well, this is just an unsigned piece of paper.

By the Court: That is what it purports to be. The witness said he procured that modification in the standing contract, if I understood him correctly.

By Mr. McCanna: Well, I object to it as being
2365 not proven.

By the Court: The objection is overruled. It may be received.

(Said document, so offered and received in evidence, was marked DEFENDANTS' EXHIBIT NO. 70.)

By Mr. Clement: I will ask the Reporter to mark this physical exhibit Defendants' Exhibit 71 for identification.

(Thereupon said article was marked Defendants' Exhibit No. 71 for identification.)

By Mr. Clement:

Q. Mr. Brasile, I hand you this physical exhibit, Defendants' Exhibit 71 for identification, and ask you if you can identify this?

A. I can.

Q. What is it, please?

A. It is a closer for Pure-Pak containers.

Q. Do you know who made it?

A. Yes, sir.

Q. Who made it?

A. We did, our R & B. Metal Products in Woodstock, Illinois.

2366 Q. Who asked them to make it?

A. I.

Q. What was the purpose of this device?

A. The purpose of this device was to attach it to the Mojonnier-Dawson filler, which would enable a man, an operator, to eliminate a hand—the hand handling of the container as it closed.

By the Court: Let me see it.

By the Witness: It is in different parts, sir. I will take it apart.

2367 By Mr. Clement:

Q. How did you happen to make this device, or have it made?

A. Well, the Brooks Supply Company, Mr. Carl Allen and Frank Brooks asked if we could do something about that because they were being refused in the State of Louisiana, regarding the handling of the Pure-Pak container by the operator on a Mojonnier-Dawson machine that we were selling at that time.

Q. You said "being refused"?

A. By the Board of Health Department, I mean.

Q. Are you speaking of the Board of Health?

A. They would not—I am sorry. The Board of Health Department would not give them the right to give them the machine in that state.

Q. Did they tell you or did they ask you to do something about that?

A. Yes, they did.

Q. Was this the result?

A. Well, first I called Mr. Albert Mojonnier, who, in turn, gave me one of our old closers, which was one solid piece and it had grooves in it which we, in turn, sent down immediately to Louisiana and it was not accepted
2368 because it wasn't—they weren't able to clean it. They couldn't take the unit apart to clean it.

Q. Then what happened?

A. Well, we made that.

By the Court: How does it go together?

By the Witness: I will show you, sir.

The operator, to clean it, he takes it apart. I can assemble it on the machine, to show you. This (indicating) is just to hold it. You take these wing nuts off. All these parts come together and it is easy to clean this closer.

By the Court: Now assemble it.

By the Witness: (Witness illustrates.)

By the Court: Is that for use?

By the Witness: Right now, yes, sir.

By the Court: Let me see it.

By Mr. Clement:

Q. Do the wing nuts have to be on it?

A. Yes, sir. I mean, you have to have wing nuts on it.

By Mr. Clement: Would your Honor care to have him show how a carton goes through it?

By the Court: No.

2369 By the Witness: It is very simple.

By the Court: Well, how does it go through? It goes through this end, does it (indicating)?

By the Witness: It starts at that end, yes, sir, the left-hand.

By the Court: And then what happens?

By the Witness: And then it travels right on through. The cartons accumulate underneath it, too.

By the Court: What does it do, fold it up, seal it?

By the Witness: That is right, sir. It doesn't seal it. It closes it ready to be sealed, ready to be stapled, and this is just a holder (indicating).

By Mr. Clement:

Q. Can you show us where it goes on the Mojonnier machine?

By the Court: Well, I can imagine that.

By Mr. Clement: I offer this into evidence as Defendants' Exhibit 71.

By the Court: Any objection?

By Mr. McCanna: No objection.

2370 By the Court: It may be received.

(Said article, so offered and received in evidence, was marked DEFENDANTS' EXHIBIT NO. 71).

2371 By Mr. Clement:

Q. Mr. Brasile, after you got these modified contracts from Ex-Cell-O, did you obtain leases or machines for any jobbers?

A. Yes, I did.

Q. For whom did you obtain them?

A. Dico Industry in Des Moines, Iowa; Brooks Supply Company in Joplin, Missouri; Clifton Sewell, a brother of H. Sewell of Miller—I mean, of Sewell-Miller Supply Company of Atlanta, Georgia; Northwestern Supply of Moorhead, Minnesota, and John S. Lanning of Pennsylvania.

Q. How do you spell it?

A. L-a-n-n-i-n-g.

Q. What did they do after you obtained these leases for them?

A. What did they do?

Q. Yes.

A. We started forming the containers and supplying the dairies with the containers.

By Mr. McCanna: How would this witness know what they did? Was he there?

By the Court: I don't know.

By the Witness: Yes, I was.

2372 By Mr. McCanna: I object and move to strike the answer.

By the Court: You can cross examine him on that.

By Mr. Clement:

Q. Were you there when the installations were made?

A. I helped in my ideas on how to install.

Q. These were some of the jobbers that you had under the contract, is that correct?

A. Yes, sir.

Q. How many of these jobbers that you had under the original contract have you been able to set up in connection with U. S. Dairies Sales, your corporation, after the termination of the contract; how many of the original jobbers that you had when you were selling the Mojonnier-Dawson machine do you have now?

A. Well, about sixty days ago we just received the first order from Girton Sales Company. That is the only one.

Q. That is the only one?

A. That's right, sir.

2373 Q. When was your first machine sold and delivered by the U. S. Dairies Sales Company? I mean, filler machine, of course.

A. One was shipped by truck on December 26th and we delivered one.

Q. What year was that?

A. In 1953. That was shipped to the Green's Ice Cream Company in New York and then we delivered one with our own—with a car and a trailer, down to Southern Belle Dairy in Somerset, Kentucky, on January the 2nd. Well, it was January 1st, New Year's day eve, New Year's day eve.

Q. How was your new machine received in the trade?

A. All right. It was very encouraging.

Q. Did you demonstrate the machine?

A. Yes. We made demonstrations during the month—during the early part—the latter part of November and the month of December.

Q. To whom did you demonstrate, if you recall?

A. Well, first of all, I called the jobbers that I knew personally that I had done business with while I was under contract with the Mojonnier-Dawson people, and

2374 from that group, the Badger Products of Neenah, Wisconsin, came in and Mr. Bray and Mr. Bernstein of that company and Mr. Larson of the Northwestern Supply came in and Mr. Irvin Barnett of the Barnett Company and the Mailender-Barnett Company, Ralph Miller of the Miller Supply out in Canonsburg, Pennsylvania, and Mr. Harry Creisi of Newcastle—of the Creisi Supply of Newcastle, Pennsylvania.

Q. Did the—

Q. I think I have them all.

2375 Q. Did the orders resulting from these demonstrations live up to your expectations?

A. No. No, sir.

Q. What did you do about it?

A. Well, I was very disturbed because they were very encouraged over the demonstrations we made and I took it upon myself to call, especially the jobbers who were very good friends of mine, the jobbers that I had done business with for two or three years in a row, and ask what seemed to be the trouble.

Q. Well, now, Mr. Brasile, I don't want you to tell me anything about what they told you, these jobbers, but I will ask you whether or not these conversations with these jobbers raised any new question in your mind about your filler.

A. Yes, sir.

Q. What question was that?

A. It left me with the impression that I was patent infringing on the Mojonnier-Dawson filler, they were arguing it was.

Q. What did you do about that?

A. I immediately got in touch with my attorney, Mr. Richard Voland.

2376 Q. And then what happened? When was that?

A. That was around January—oh, I can't give you the exact date. It was around January the 18th, the 19th, during that week.

Q. Do you have any letters or correspondence that would refresh your recollection on that?

A. Yes, sir.

Q. Will you look at them, please?

A. I have one of January the 19th, sir.

Q. Well, do you have an independent recollection now of when this was?

A. Well, it must have been at that time.

Q. I am speaking of when you got in touch with your attorney for the first time on this question.

A. On this question?

Q. Yes.

A. It must have been the middle of January.

Q. Of what year?

A. Of 1954.

Q. What did you do then?

A. Well, I immediately contacted my attorney.

Q. Well, after you had contacted your attorney, what did you do?

Did he advise you to do anything?

2377 A. Yes, he did.

Q. What did you do?
A. Well, they had a patent search of my—
Q. Who is "they"?
A. My attorney.
Q. Mr. Voland?
A. Mr. Voland got in touch with the Wilkinson, Huxley, Byron & Hume office who are patent attorneys.
Q. Did you ask them to do anything?
A. Yes. I asked them to check and see if we were really patent infringing on the Mojonnier-Dawson filler.
Q. What was the result of that?
A. Well, I received a letter on January 22nd.
2378 Q. From whom?
A. From Mr. Voland.
Q. What did you do then?
A. What did I do then?
Q. Yes.
A. Oh, from this letter, sir?
Q. Well, did you have any idea then of whether you were infringing or not?
A. From that letter I thought we weren't infringing then, no.
Q. Did you receive an opinion from your attorney?
A. Yes, I did.
Q. Do you recall the character of that opinion?
A. Well, I am not a patent counsel.
Q. Did they tell you whether you were infringing or not?
A. That is right. They told me I wasn't infringing.
Q. You were not?
A. Were not.
Q. Infringing what?
A. The Mojonnier-Dawson filler.
Q. Did they mention a particular patent?
A. At that time?
2379 Q. Yes.
A. Well, they asked me, said that I had to wait until about February the 2nd, about the issue of a patent of some kind.
Q. Was that the patent in suit?
A. That is right.
Q. Are you familiar with the nameplate that appears on the Mojonnier-Dawson machine?
A. I am.
Q. Do you know whether or not that nameplate has patent numbers on it?

A. They have.

Q. Do you have any recollection of whether those were included in any report which you received from your attorney, those numbers?

Were those numbers checked by your attorney?

A. They were.

Q. What opinion did you receive on those?

A. That they didn't relate to the filler machine.

Q. What did you do then?

A. Well, my attorney—

Q. Who?

A. Mr. Richard Voland, drafted a letter which we—he drafted a letter for us to type and send to the
2380 Mojonnier-Dawson Company.

Q. Do you have a copy of that letter?

A. I have.

Q. Will you produce it, please?

A. Here it is.

Q. Is it marked with an identification number?

A. 50.

Q. Defendants' Exhibit 50 for identication?

A. Yes, sir.

Q. What is the character of that letter?

A. Well, it was telling, it was stating to the Mojonnier-Dawson Company—

Q. Who is it addressed to?

A. It was addressed to the Mojonnier-Dawson Company—to the Mojonnier-Dawson Company.

Q. Fine. Proceed.

A. Do you want me to read the letter?

Q. Tell us what the substance is, if you can. You had better read it, I guess, Mr. Brasile.

A. (Reading.)

"Dear Sirs:

"It has come to our attention that for many weeks
2381 last past your company has been circulating or causing to be circulated throughout the trade charges that our M. J. Semi-Automatic Milk Filler infringes your patent rights, and that in certain instances your company has called on jobbers, distributors and customers of ours and threatened them with suit for patent infringement if they should deal in or purchase our equipment.

"We wish to advise you that this conduct on your part has already resulted in very substantial damage to our business.

"We have caused to be made a thorough study of all the patents referred to in the notice contained on your filler and of other patents disclosed by the records to have been assigned to your company, and in the opinion of our counsel our device does not in any respect infringe any of these patents. We therefore are unable to perceive the
2382 basis for the claim of patent infringement which you made and must ask that you advise us promptly and in writing of the numbers and dates of issuance of the patents held by you which you claim we infringe.

"Awaiting your very early reply."

Q. What was that last?

A. "Awaiting your early reply, we are, very truly yours, U. S. Dairies Sales Corporation by Maurice J. Brasile, President."

2383 Q. What is the date of that letter?

A. February 11.

Q. Is that your signature on the letter?

A. Yes, sir.

Q. Was the letter sent on or about the date it bears?

A. Yes, sir.

Q. Mr. Brasile, this letter is dated Febrdary 11, 1954. Had you received an opinion from your attorney relative to whether or not you infringed the patent in suit, which issued on February 2, 1954?

A. Yes, sir.

Q. What was the nature of that opinion?

A. That we did not infringe.

By Mr. Clement: I offer this letter, Defendants' Exhibit 50, into evidence.

By Mr. McCanna: No objection.

By the Court: It may be received.

(Said document, so offered and received in evidence, was marked DEFENDANTS' EXHIBIT NO. 50.)

By Mr. Clement:

Q. What else did you do, Mr. Brasile, if anything?

A. Why, I immediately sent letters to the jobbers.

2384 Q. Which jobbers?

A. Jobbers that we were doing business with.

Q. All right.

A. (Continuing.) And telling them that we weren't infringing on the Mojonnier-Dawson patent.

Q. Do you have a copy of such a letter?

A. Yes, I have.

Q. Would you produce it, please?
A. I have it right here.
Q. To whom is it addressed?
A. The first one?
Q. Well, any one that you have.
A. This is addressed to Mr. John F. Werber, Werber Dairy Supply Company, St. Louis, Missouri.
Q. What is the date?
A. February 11.
Q. What does that letter say?
A. (Reading.)

"This is in regard to the matter discussed in our recent telephone conversation with you. It has recently come to our attention from several sources that for several weeks last past Mojonnier-Dawson Company has been circulating or causing to be circulated throughout the trade
2385 charges that our M. J. Semi-Automatic Milk Filler infringes their patent rights. As soon as this matter first came to our attention, we immediately caused to be made an extensive search and study of all patents known to be held by this company and our patent counsel have informed us that none of these patents applies to any part of our device. We are confident that this claim of Mojonnier-Dawson Company is absolutely without foundation and is being made for the purpose of hindering the sale of our machine. Indeed, we feel that this unfair method of competition on their part is a tacit admission of the fact that our filler is vastly superior to theirs. Needless to say, if these charges continue to be made, we will take affirmative action to stop these rumors at their source. If nevertheless you are fearful of becoming involved in some way, please let us know what form of assurance or protection you desire to have from us in this connection and we would be very happy to work out some mutually
2386 satisfactory arrangement."

Q. Who drafted that letter?
A. My attorney Mr. Richard Voland.
Q. Is that copy you were reading from a true copy of the letter which went to Mr. John F. Werber of the Werber Dairy Supply Company on or about the date it bears?
A. Yes, sir.
Q. Did you sign such a letter?
A. Yes, sir.

By Mr. Clement: I will ask the reporter to mark this as Defendants' Exhibit 72 for identification.

(Whereupon said document was marked Defendants' Exhibit No. 72 for identification.)

By Mr. Clement: I offer this into evidence as Defendants' Exhibit 72.

By Mr. McCanna: No objection.

By the Court: It may be received.

(Said document, so offered and received in evidence, was marked DEFENDANTS' EXHIBIT NO. 72.)

2387 By Mr. Clement:

Q. Did you send other such letters, Mr. Brasile, as the one we have just looked at, Defendants' Exhibit 72?

A. Yes, there are a few more here.

Q. To whom did you send them, just generally?

A. Brooks Supply Company of Joplin, Missouri. Sewell-Miller Dairy Supply of Atlanta, Georgia. Riley Dairy Supply, Grand Rapids, Michigan.

Q. Are these letters all the same?

A. Yes, sir.

Q. Proceed.

A. Northwestern Carton Formers of Moorhead, Minnesota. Ralph Miller & Sons, Canonsburg, Pennsylvania. Mailender-Barnett of Cincinnati, Ohio. Ward C. Cramer Associates of Boston, Massachusetts. Barnett & Company of Indianapolis, Indiana. Badger Products, Neenah, Wisconsin. Girton Sales of Millvale, Pennsylvania.

Q. Would you look at the letter to Brooks Supply Company?

Do you have a copy of the letter to Brooks Supply Company? Do you have it?

A. Yes, sir.

2388 Q. Would you look at it, please?

A. Yes.

Q. Would you compare it with the letter to John F. Werber and see if it is the same as the copy of that letter?

Is the first sentence the same, Mr. Brasile?

A. No, sir.

Q. Would you read the first sentence of the Brooks Supply Company letter?

A. (Reading.)

"It has recently come to our attention from several sources that for several weeks last past Mojonnier-Daw-

son Company has been circulating or causing to be circulated throughout the trade charges that our M. J. Semi-Automatic Milk Filler infringes their patent rights."

Q. Now in the letter to Mr. Werber, it mentions a telephone conversation, is that correct?

A. That is right. He called me.

Q. Is that the difference between the two letters?

A. That is right, sir.

2389 Q. There is some difference on that basis then between these letters?

A. That is right. He called me and was very anxious to know immediately. These are dated February 12 and that letter is dated the 11th.

Q. Is this Brooks Supply letter, carbon copy of a letter dated February 12, one which you sent out on or about the date which it bears?

A. Yes, sir.

Q. Do you recall signing such a letter?

A. Yes, sir.

By Mr. Clement: I will ask the Reporter to mark the Brooks Supply letter for identification as Defendants' Exhibit 73.

(Thereupon said document was marked Defendants' Exhibit No. 73 for identification.)

By Mr. Clement: I offer Defendants' Exhibit 73 into evidence.

By Mr. McCanna: No objection.

By the Court: It may be received.

(Said document, so offered and received in evidence, was marked DEFENDANTS' EXHIBIT NO. 73.)

2390 By Mr. Clement:

Q. Why were these letters sent out, Mr. Brasile?

A. Why were they sent out?

Q. Yes.

A. Because there were rumors through the trade, we were told that we were patent infringing on the Mojonnier-Dawson filler.

Q. Had you received any inquiry from these people that you sent the letters to?

A. Did I receive any inquiries?

Q. Yes.

A. Well, I got a telephone call from Mr. Werber in St. Louis, Missouri.

Q. Did you receive any other inquiries, if you recall?
A. Well, I received an injury from one of our salesmen, a letter from one of our salesmen about a jobber.
Q. Which jobber?
A. Mr. Sewell Miller.
Q. Where was he located?
A. Atlanta, Georgia.
2391 Q. Mr. Brasile, you mentioned opinions regarding the patent in suit and the patents that appear on this name plate. From where did those opinions come? Which attorneys?
A. From the office of Wilkinson, Huxley, Byron & Hume.
Q. Mr. Brasile, in the period from January 1, 1954 to April 30, 1955, how many machines, if you know, were sold by your companies? That is January 1 of last year to April 30 of this year.
A. Approximately 160.
Q. Have you sold these machines yourself in the trade?
A. You mean personally?
Q. Yes. Have you engaged in sales work yourself?
A. Yes, I have.
Q. Both the Mojonnier-Dawson machine and your machine?
A. Yes, sir.
Q. Based on your experience as a salesman selling this particular device or these devices, namely, the Mojonnier-Dawson device and your own device, do you have an opinion as to how many you could have sold of your device had the eighteen or nineteen thousand notices
2392 of infringement not been sent to the trade?
By Mr. McCanna: I object to that, your Honor, an opinion of that type. I don't think that that could have any possible weight or that there is any basis for any such an opinion.
There has been nothing proved that any notices were sent out or that any trade has been notified up to this time.
By the Court: I don't know.
By Mr. Clement: You say there is no proof of notices having gone out?
By Mr. McCanna: He is talking about this letter that he sent out or that he sent to Mojonnier on February 11th. I object to his opinion.
By Mr. Clement: My question, just so you understand

it, Mr. McCanna, related to the eighteen or nineteen thousand notices that Mr. Mojonnier sent out to the trade. That is in my question and I asked him if he had an opinion as to how many he might have sold if these notices had not gone out.

By Mr. McCanna: Well, 40,000 people might get
2393 notices and throw them in the waste basket.

By the Court: I don't know if it is competent or not. What issue are we trying right now to which that could be pertinent?

By Mr. Clement: This relates primarily to our counterclaim, your Honor.

By the Court: I have forgotten what the counterclaim is.

By Mr. Clement: It is our position that the bad faith which was exhibited by the plaintiff in connection with these patent matters seriously damaged the defendants.

By the Court: I am going to let him answer. I don't know whether that answer is competent, but I am going to let him answer, and you can talk about it in your briefs.

2394 By Mr. Clement:

Q. What does the Milk Container Equipment Corporation do with respect to the machine which you make, which your companies make, Mr. Brasile?

A. Manufacture the equipment and assemble.

Q. Do they actually manufacture the parts?

A. No, sir. It is just an assembly company. They just assemble the machine.

Q. I am reminded, Mr. Brasile, that you did not answer my question about how many machines you thought you could have sold that I asked you before.

A. Oh, I am sorry. I didn't know—how many I could have sold?

Q. Do you have an opinion as to how many machines you could have sold had the eighteen to nineteen thousand notices to the trade not gone out, based upon your experience as a salesman of this same type of machine for at least the previous three and a half years?

A. Through jobbers and all?

Q. Yes.

A. Oh, two to one more.

Q. Two to one more than what?

2395 A. To 160. I would say about 320 more—or 320 total. In other words, I would be conservative, 160 more.

Q. Referring back again to the assembly of these machines, how many man-hours does it take to assemble one of these machines that you manufacture and sell or assemble and sell?

A. Well, it takes a man a day and a half or two to assemble it and check it and crate it before it is sent out.

Q. What is the function of U. S. Dairies Sales Company?

A. Sales organization.

Q. What do they sell?

A. Fillers manufactured by Milk Container.

Q. What about the Purity Pack Corporation?

A. At the present time it is inactive, sir.

Q. What did the Purity Pack Corporation do when it was active? What was the purpose of setting it up?

A. The purpose of setting it up, it was always our belief to have three companies, one to preform containers, manufacture containers; one for the sales of fillers; and one to manufacture fillers. But we weren't successful in put-
2396 ting up preforming plants, I mean financial wise. We couldn't afford it.

Q. Do you have books for these three corporations, Mr. Brasile?

A. Yes, sir.

Q. What type of books?

A. General ledger books, original entry books.

Q. Are these kept in the regular course of business?

A. Yes, sir.

Q. Was it the regular course of business to keep such books?

A. Yes, sir.

Q. Were the entries in these books made at or about the time of the transactions that they record?

A. Yes, sir.

2397 By Mr. Clement: I would like to introduce into evidence at this time Defendants' Exhibit 33, the physical exhibit.

By the Court: Any objection?

By Mr. McCanna: No objection.

By the Court: It may be received.

(Said article, so offered and received in evidence marked DEFENDANTS' EXHIBIT NO. 33.)

By Mr. Clement: I would also like to introduce this easy lift Pure-Pak carton, Defendants' Exhibit 68.

By Mr. McCanna: No objection.

By the Court: It may be received.

(Said article, so offered and received in evidence, was marked DEFENDANTS' EXHIBIT NO. 68.)

By Mr. Clement: I would also like to introduce the compilation of patents appearing on the name plate of the machine, Plaintiff's Exhibit 37, which we agreed to put in as Defendants' Exhibit 27.

By Mr. McCanna: No objection.

By the Court: Any objection?

2398 By Mr. McCanna: No objection.

By the Court: It may be received.

(Said document, so offered and received in evidence, was marked DEFENDANTS' EXHIBIT NO. 27.)

By Mr. Clement: I believe Mr. Voland has a few exhibits to introduce, your Honor, if he may.

By Mr. Voland: Mr. Brasile, I show you a document which has already been marked as Defendants' Exhibit 39, purporting to be a copy of the resignation of Mr. Eugene Blum as Director of U. S. Carton Forming Corporation and I ask you if Mr. Blum signed that document in your presence.

By the Witness: Yes, sir.

By Mr. Voland: Thank you. May I have it, please?

We offer at this time, if the Court please, Defendants' Exhibits 38 and 39 for identification.

By Mr. McCanna: No objection.

By the Court: No objection?

I can't hear you.

2399 By Mr. McCanna: No objection, your Honor.

By the Court: It may be received.

(Said documents, so offered and received in evidence, were marked DEFENDANTS' EXHIBITS NOS. 38 and 39, respectively.)

By Mr. Voland: I also offer at this time Defendants' Exhibit 34 for identification, being the copy of the notice of rescission of the assignment of invention to Pack Equipment Corporation, I believe what Mr. Lewis testified was received.

By Mr. McCanna: I believe Mr. Lewis testified just the opposite, that he hadn't received any of these letter notices. I think that is an erroneous statement, Mr. Voland.

By Mr. Voland: I think the record will show, your Honor, that Mr. Lewis said that this document, the rescission of the assignment of invention, was received by the corporation.

He said that he had no recollection of the receipt of the notices rescinding the voting trust agreements, but as
2400 to the rescission of the assignment of the invention, I think he said—I am positive he said that the Pack Equipment Corporation did receive that notice.

By Mr. McCanna: I will rely on what the record shows, your Honor.

By the Court: All right.

It may be received.

(Said document, so offered and received in evidence, was marked DEFENDANTS' EXHIBIT NO. 34.)

By Mr. Voland: Mr. McCanna, would you be willing to let us substitute photostatic copies of that exhibit? The original happens to be of some importance to us.

I have two photostats here and I would like to have you check them and see if you can agree that we might substitute them in lieu of the carbon copies which we have.

By Mr. McCanna: Well, I think the copies of the return receipts should also be attached because there was a lot of discussion at the time Mr. Lewis was on the stand.

By Mr. Voland: With respect to that document,
2401 the receipt was not identified. Mr. Lewis, as I say, testified that the corporation received it. The corporation was a party to the agreement. I just don't want to encumber this record any more than we have to, Mr. McCanna.

By Mr. McCanna: I will stand on what the record shows, your Honor.

By the Court: All right.

By Mr. McCanna: And it may be substituted.

By Mr. Voland: And we may substitute it.

By the Court: All right.

2402 By Mr. Voland: Will you please mark the photostats?

(Thereupon said photostats were marked in lieu of the original exhibits.)

By Mr. Voland: I also offer at this time the Defendants' Exhibits 35 and 36 and 37 for identification, being the copies of the notices of rescission of the voting trust agreements.

By Mr. McCanna: I am rather positive, your Honor, that these are not proven and I object to them and Mr. Lewis definitely denied having received any of these.

By Mr. Voland: Let me say Mr. Lewis said he did not recall whether they were received.

I am perfectly willing, if counsel insists, to be sworn and testify to the fact that these papers were prepared in my office, signed by me, and mailed under my supervision and direction and that we received return registered re-
2403 ceipts for these documents. I think that is a form of document which I am permitted to testify to, if counsel wants me to testify.

By Mr. McCanna: I will rely on the record, on what the record shows.

By the Court: Counsel wants to make the record. Do you want him to do it?

By Mr. McCanna: I think that would be better, your Honor, just to clear the record.

By Mr. Voland: Will you step down, Mr. Brasile, please? (Witness withdrawn.)

RICHARD E. VOLAND, having been first duly sworn, testified in narrative form as follows:

Direct Examination.

By the Witness: The document—

By the Court: The name?

By the Witness: My name is Richard Voland. I reside at 1350 Garfield Avenue, Aurora, Illinois.

I am an attorney at law. I have my office at 105 South LaSalle Street in the City of Chicago, and I am asso-
2404 ciated with the law firm of Defrees, Fiske, O'Brien & Thomson.

On or about the 31st of August, 1953, I was retained by Mr. Maurice J. Brasile and Mr. Eugene J. Blum to represent them in connection with some problems that they had relating to U. S. Carton Forming Corporation and their relations and that of the corporation, with Mr. A. A. Lewis, under certain voting trust agreements, which had been previously entered into.

Lengthy negotiations ensued, which occupied several months and in which efforts were made to obtain the cooperation of the other stockholders of U. S. Carton Form-

ing Corporation, in efforts to have these voting trust agreements set aside either by a negotiated agreement or by litigation, if necessary.

Those negotiations terminated in the latter part of November, when the other stockholders made some new arrangements with Mr. Lewis, and Mr. Blum and Mr. Brasile were discharged as officers of the corporation and they, of course, thereafter, pursuant to my advice, tendered
2405 their resignations as directors.

I thereupon prepared three letters. I dictated three letters, one on January 8, 1954, to Mr. A. A. Lewis, which has been marked in this record as Defendants' Exhibit 35 for identification, stating in substance that we wish by this letter to confirm on behalf of Messrs. Brasile and Blum that they, and each of them have elected to rescind and have rescinded the voting trust agreement pertaining to the shares of stock of Preformed Carton Corporation.

Defendants' Exhibit 35 for identification is a carbon copy of the original of the letter which was handed to me on that date and which I signed on that date.

On the same date, also dictated a letter addressed to Mr. A. A. Lewis, Mr. Charles B. Patten, Mr. Joseph B. Zeigler, Mr. M. M. DeTolve, Mr. Joseph DeTolve, who were the signatory parties to that voting trust agreement, advising them that Messrs. Brasile and Blum have elected to rescind and have rescinded a certain agreement entitled "Voting Trust Agreement pertaining to shares of
2406 stock of U. S. Carton Forming Corporation."

Defendants' Exhibit 37 for identification is a carbon copy of the original of the letter which I signed on that day.

2407 On the same date, I also prepared another letter, addressed to Mr. A. A. Lewis. I dictated the letter stating that we wish, by this letter, to confirm on behalf of Messrs. Brasile and Blum that they, and each of them have elected to rescind and have rescinded a certain agreement entitled "Voting Trust Agreement pertaining to shares of stock of U. S. Filler Equipment, Inc."

Defendants' Exhibit 36 for identification is a carbon copy of the original of the letter which I signed on that day.

After signing the originals of these letters, I gave them to the mail clerk in our office and instructed him to send them by registered mail, return receipt requested.

We received return receipts for all of the documents, for all of the three letters.

I have mislaid or I cannot find the return receipt for Defendants' Exhibit 35, addressed to Mr. Lewis, which relates to Preformed Carton Corporation, but we have, and there are attached to the Defendants' Exhibits 37 and 36, the registered mail return receipts from the addressees
2408 of those documents.

By the Court: You are offering these?

By Mr. Voland: We are now offering them, if the Court please.

By the Court: Is there any objection?

By Mr. McCanna: Yes, I object.

By the Court: What is the objection?

By Mr. McCanna: I still don't think they are proven, I regret to say.

By the Court: In what respect?

By Mr. McCanna: There is no proof that Mr. Lewis received anything and as Mr. Voland's statement shows, he doesn't have any proof of it.

By the Court: What is the ordinary course of business in your office with respect to mailing matters such as this?

By the Witness:

A. Oh, letters of this kind, if the Court please, are placed on the mail clerk's desk. If they are intended to go by registered mail, return receipt requested, that is stamped on the envelope and the clerk takes them to
2409 the Registered Receipt window. He mails all other types of mail, and that type of mail, in the Old Post Office Building here in Chicago. He makes several trips for that purpose and returns regularly to pick up the receipts.

By the Court: Any further objection?

By Mr. McCanna: I still don't think it is proven. That's all. I object.

By the Court. The objection is overruled. They are received.

By Mr. Voland: May we, again, substitute photostatic copies of those three exhibits, Mr. McCanna? I will permit you to compare them, if you like.

By Mr. McCanna: Yes. That is satisfactory with me.

By the Court: Yes.

By Mr. Voland: We will substitute them later, to save time, if the Court please.

By Mr. McCanna: I believe, your Honor, that counsel

requested us to produce the originals of some of these photostatic copies of ledger sheets.

I have them here and I would like to have them
2410 substituted for the photostatic copies.

• • • • •

2413 By the Court: Proceed.

Cross-Examination by Mr McCanna.

Q. Mr. Brasile, I call your attention to the accused filler, Plaintiff's Exhibit 40 over here.

A. Yes, sir.

Q. And I will ask you how much pressure will the float valve in Plaintiff's Exhibit 40 control?

A. Approximately about 12 pounds of pressure, sir.

Q. How accurately will the float valve in Plaintiff's Exhibit 40 hold the level in the tank 14 under the pressure you have just mentioned?

A. I would say within two or three quarts of milk. That wouldn't offset our fill. It would still give us an accurate fill.

By the Court: Well, now, wait a minute. Read that to me.

(Whereupon the record was read as follows:

"I would say within two or three quarts of milk.")

By the Court: Two or three quarts of milk on what?

2414 By the Witness: On the incoming milk.

By the Court: Well, how much?

By the Witness: I don't understand, I am sorry.

By the Court: Well, within two or three quarts of milk, what do you mean? A quart bottle, gallon bottle, or 20 gallons or 100 gallons?

By the Witness: Half gallon—oh, within six gallons, six gallon capacity.

By the Court: What was that, within one or two quarts of milk within a six gallon quantity?

By the Witness: That is right, sir.

By the Court: Six gallons would be 24 quarts. Two quarts in 24 would be one-twelfth. That wouldn't be very accurate, would it?

By the Witness: It would still give an accurate fill, sir.

By the Court: Go ahead.

By Mr. McCanna: We wanted a commitment on that, your Honor. I think we have it.

By Mr. McCanna:

Q. Now, Mr. Brasile, referring to Plaintiff's Ex-
2415 hibit 37 and Plaintiff's Exhibit 40, which one of these would hold the most accurate level in the float tank? In which one of these would the float valve hold the most accurate level in the respective tanks?

By Mr. Clement: You mean with a constant pressure, Mr. McCanna?

By Mr. McCanna: I haven't said anything about pressure yet. I want him to answer that question.

By the Court: Read the question.

(Whereupon the question was read as above recorded.)

By Mr. Clement: I also object that this is beyond the scope of the direct.

By Mr. McCanna: Oh, he has talked about all these machines and their operation, and I believe in our examination—

By the Court: I don't think that is within the scope of the direct.

By Mr. Clement: Mr. Brasile isn't an engineer.

By the Court: He was telling generally what he
2416 did, trying to explain that what he did was merely to supplement the plaintiff's machine or device. That is about as far as he went.

He doesn't purport to be an engineer. He wasn't telling you this is better or this is not better, and so forth.

By Mr. McCanna: I would like to ask the witness one question then:

By Mr. McCanna:

Q. Based on your observation in operating these machines, Mr. Brasile, do you consider the float valve of Plaintiff's Exhibit 40 superior?

By the Court: Now wait a minute. What is that, Exhibit 39?

By Mr. McCanna: This is Exhibit 39 and this is 37.

By the Court: Which machine are you talking about?

By Mr. McCanna: Well, both of these have the same float valve. I said Exhibit 37, your Honor.

By the Court: 37, all right. This is 37 here?

By Mr. McCanna: Yes.

2417 By the Court: And this is Exhibit 40 over there?

By Mr. McCanna: Yes.

By the Court: Is there a float valve in there?

By Mr. McCanna: There is a float valve construction in there.

By the Court: And you want to know which float valve will be the more accurate, is that it?

By Mr. McCanna: Yes.

2418 By the Court: Under the same pressure?

By Mr. McCanna: I was going to ask him under gravity pressure and then under pump pressure.

By the Court: Well, you didn't ask him under either. It is under the same pressure, is that it?

By Mr. McCanna: Yes, under the same pressure. We will assume gravity pressure.

By the Witness: Gravity pressure?

By the Court: Now if you know, you can tell us.

By the Witness: Equal.

By Mr. McCanna:

Q. And with pump pressure, what would you say?

By the Court: Pump pressure, what does that mean?

By the Witness: How much pump pressure?

By Mr. McCanna: He has testified here a minute ago to a pump pressure up to what?

By the Witness: 12 pounds.

By the Court: 12 pounds.

2419 By the Witness: Under 12 pounds, that machine there, the milk will overflow, go through the tank, over the top of the tank. (Indicating Plaintiff's Exhibit 37.)

By the Court: What about this one?

By the Witness: No, sir.

(Indicating Plaintiff's Exhibit 40.)

By Mr. McCanna:

Q. Do you think it is necessary to have the lower end—

By the Court: It won't go through the bottom, you mean?

By the Witness: Over the top.

By the Court: This would be more accurate then, is that it?

By the Witness: Yes, sir.

By the Court: And this is Plaintiff's Exhibit 40, is that right?

By the Witness: Yes, sir.

By Mr. McCanna:

Q. Mr. Brasile, do you think it is necessary to have the lower end of the nozzle go down into the carton for satisfactory operation of a filler such as Plaintiff's Exhibit 40?

A. It makes a better operation, yes, and sanitary conditions.

2420 By Mr. McCanna: That is all I wanted to know, your Honor.

By the Court: All right.

Anything else?

By Mr. Voland: One other short witness and that will be all, your Honor.

By the Court: You have nothing more from this witness?

By Mr. Clement: No.

By the Court: Step down.

(Witness excused.)

JOHN L. SHAW, called as a witness on behalf of the Defendants, having been first duly sworn, was examined and testified as follows:

Direct Examination by Mr. Voland.

Q. Will you state your full name, please?

A. John L. Shaw.

Q. Where do you live, Mr. Shaw?

A. 306 Windsor Drive, Arlington Heights, Illinois.

Q. What is your business or profession?

A. I am a certified public accountant.

2421 Q. How long have you been a certified public accountant in Illinois?

A. I passed the November, 1930 examination.

Q. Did you practice accounting before you were certified?

A. I did.

Q. For how many years?

A. Since August, 1925.

Q. Will you describe briefly, please, your professional experience.

A. I was with Lybrand, Ross Bros. & Montgomery for two years. They are a public accounting firm.

Q. Keep your voice up, please.

A. Lybrand, Ross Bros. & Montgomery for two years; then with Horwath & Horwath about 15. Then Arthur Andersen a year and a half. My present connection, Philip Wain & Company, I have been there almost ten years.

2422 Q. Where are your offices, Mr. Shaw?

A. The First National Bank Building.

Q. Do you belong to any professional societies?

A. The Illinois Society of CPA's and the American Institute of Accountants.

Q. Were you asked by me, Mr. Shaw, to make an examination of the books of account of Milk Container Equipment Corporation, Purity Pack Corporation, and U. S. Dairies Sales Corporation?

A. I was.

Q. What examination of those books did you make?

A. Well, I examined the records of the three corporations from their inception until April 30 of 1955.

Q. What was the inception, if you know, of Milk Container Equipment Corporation and Purity Pack Corporation?

A. I believe they originated in September of 1953.

Q. What books did you examine?

A. The general ledgers of the three corporations and the books of original entry of all three of them.

Q. From whom did you get the material that you

2423 examined, Mr. Shaw?

A. From Mr. Brasile.

Q. Do you have those books with you?

A. They are here, yes.

Q. Did you check to see what was shown by those books as to the total of new filler sales by both Purity Pack and U. S. Dairies Sales Corporation for the period September 25, 1953, through April 30?

A. I did.

Q. What was that total?

A. The total was 160 units for the two corporations.

By the Court: I can't hear you.

By the Witness:

A. A total of 160 new fillers for the two corporations.

By Mr. Voland:

Q. From the period September 25, 1953 to April 30, 1955?

A. That is correct.

Q. Can you tell us how that breaks down by months?
A. Yes, sir. Which corporation do you want first?
Q. Let's take Purity Pack first. Perhaps you can
2424 consolidate them, if they overlapped at all.
A. Purity Pack sold 3 in December of 1953; 6 in January of 1954; and 9 in February of 1954. That is a total of 18. There were two returned, which made a net sales of 16 by Purity Pack.
U. S. Dairies sold 2 in February of 1954, 12—I am sorry. That is 2 in January, 1954, 12 in February, 19 in March, 24 in April, 10 in May, 7 in June, 14 in July, 10 in August, 7 in September, 2 in October, 6 in November, and 4 in December.
In January of 1955 they sold 4, February 7, March 12, and April 3.
Q. April 3, did you say?
A. Yes.
Q. Did you prepare from these books certain profit and loss statements for these three corporations?
A. That is correct.
By Mr. Voland: I will ask the Reporter to mark these as Defendants' Exhibits 74, 75 and 76 respectively for identification.
2425 (Thereupon said documents were marked respectively Defendants' Exhibits Nos. 74, 75 and 76 for identification.)

By Mr. Voland:

Q. Mr. Shaw, I hand you three reports, which I have caused to be marked for identification as Defendants' Exhibits 74, 75 and 76 respectively, and ask you if those are the reports to which you have just referred.
A. They are.
Q. Did you also prepare from these books certain profit and loss statements for these three corporations based upon a projection of additional sales?
A. I did.
Q. And is that material contained in the reports to which we have just referred?
A. It is.
2426 Q. From what source did you obtain the data in these statements, Defendants' Exhibits 74, 75 and 76 for identification, respectively, as to actual profit and loss?
A. From the books and records of the corporations.
Q. Will you please take each one of these exhibits, Mr.

Shaw—let's start with Defendants' Exhibit 74 for identification—and tell us what the data purports to be?

Please keep your voice up.

A. Exhibit 74 is "Milk Container Equipment Corp., Statement of Profit and Loss—September 25, 1953 to April 30, 1955 and Statement of Profit and Loss based upon Projected Sale of 160 Additional Fillers."

Q. Milk Container Equipment Corporation is the manufacturing company, is that correct?

A. That is correct.

Q. Now I note that you have three columns. Perhaps I shouldn't refer to these as columns, but three sections. The first is: "Actual Operations 160 Fillers." Another section called "Averages Per Filler," broken down into "Actual" and "Projected."

Then the third heading is: "Projected Additional 2427 160 Fillers."

As to the first heading, "Actual Operations," what do you show as to the profit or loss on actual operations for the period September 25, 1953 through April 30, 1955?

A. The actual operations for that period resulted in a loss of $31,616.80.

Q. What do you show under the second heading as to the actual profit or loss per filler for that period?

A. Based upon 160 fillers which were manufactured, there was a loss of $197.60 on each filler.

Q. According to the books you examined, if you recall, when were the first fillers actually shipped?

A. They were actually shipped in the latter part of December, 1953.

Q. Now returning to your first figures under the second heading, in the column for "Projected Averages Per Filler," that is to say, the second column under that heading. I note that you have not projected each of the figures taken into account on the statement of actual operations, is that correct?

A. That is correct.

2428 Q. Now which figures have you projected and in what manner?

A. We projected the sales of the fillers on an average of the sales price between the Purity Pack and U. S. Dairies, which was $1488.75.

The filler supplies, on the same average as the filler supplies for the actual operations, $23.85. We did not project the miscellaneous income.

On the cost of goods sold, we used the same figure for the materials and parts as the actual operations worked out on an average, $1,162.61, although there was a possibility with increased volume that that might be cut down.

We used the royalties at the contract price of $150 for each machine.

We did not extend the salaries of supervision because it was our opinion that it would not need any additional supervision.

Salaries and labor—manufacturing we increased $7,000. That would be based on one additional man at $100 a week for this 70-week period, starting with January 1, 1954 to April 30 of 1955.

2429 Q. Will you explain that a little more in detail, Mr. Shaw?

A. Well, Mr. Brasile stated in his opinion this machine could be assembled by one man in a day and a half or two days. We figured possibly three days.

In this payroll of $18,000.00, $18,683.75 in the actual, that consists of two and a fraction men for 70 weeks, and that would give us about a little better than 700 man-days.

We figured that there should be another man in there, which would give them 1050 days to work, and if they made 320 fillers and it took a man three days, that would be 960.

We tried to be a little conservative, and added $7,000.00 additional payroll in the projection.

The depreciation, of course, would not increase and we did not extend the miscellaneous. It is a very nominal amount.

In the G&A expenses, based on my experience, I would say that none of these expenses would increase with increased volume with the exception of the Social

2430 Security tax on that $7,000.00 additional payroll.

Q. That is the $350.00 item?

A. That is correct.

Q. Now, Mr. Shaw, turning again to Defendants' Exhibit 74 for identification, under your third heading, what do you show as to projected profit or loss on 160 additional fillers of Milk Container Equipment Corporation?

A. $24,648.40 profit.

Q. How much does that figure per filler?

A. $154.05.

Q. Will you turn now, please, Mr. Shaw, to Defendants' Exhibit 75 for identification, and tell us what the data which it contains purports to be.

A. It is a consolidated statement of profit and loss of Purity Pack Corporation and U. S. Dairies Sales Corporation for the period September 25, 1953 to April 30, 1955, and a statement of profit and loss based upon projected sales of 160 additional fillers.

Q. This, I take it, is the same kind of report for the two selling companies as Exhibit 74 is for the manufacturing company, is that correct?

A. That is correct.

2431 Q. Now, again, will you please explain to us which costs you have projected and which costs you have not projected, and why.

A. Well, the sales were projected on the same basis as they were with the Milk Container Corporation, at the actual average for the operations.

We did not extend the used filler sales nor the cost, even though there was a slight profit in there, because it is almost impossible to determine how many used fillers they are going to take in. So that one we passed.

Filler supplies we extended on the same basis as they were, the same average. On the costs, we used the average, and of course the cost of the used fillers was not extended because the sales were not extended.

On the filler supplies we used the same average as before.

On the expenses, salaries—sales management, based on experience, we felt that that would stay the same. The salaries to the salesmen would stay the same. The commissions to the salesmen were increased in the same proportion as the average rate.

Travel-sales management, we did not think would

2432 increase any.

Travel-salesmen, we extended at the same average.

Telephone and telegraph, entertainment and advertising we did not feel would increase.

Wages-installation and travel-installation, we did not think they would increase in proportion so we used a 50 per cent increase.

Gas, oil and grease, we used a proportionate increase.

Depreciation-trucks would not increase. The miscellaneous truck expense, freight and outside hauling, and miscellaneous installation expense were increased on the same ratio as the actual operations.

Q. That continues on the second page, does it not, Mr. Shaw, page 2?

A. That is correct.

The G&A expenses, as I said before, based upon experience, we did not think they would increase. The other income and deductions we felt would not increase either.

Q. Now I take it under your third column which you have here is a consolidation then of the profit and loss reports of the two companies, is that correct?

2433 A. That is correct.

Q. Now, in that, what do you show as to a net profit or loss on a consolidated basis on actual operations?

A. The consolidated operations of Purity Pack Corporation and U. S. Dairies Sales Corporation for this period, September 25, 1953 to April 30, 1955 resulted in a net loss of $23,561.68.

Q. Will you now give us the same figures as to the U. S. Dairies Sales Corporation on the basis of 144 new fillers sold and Purity Pack Corporation on the basis of 16 new fillers sold?

A. U. S. Dairies Sales Corporation with 144 new fillers had a loss of $8,160.47.

Purity Pack Corporation with 16 fillers had a loss of $15,461.21.

2434 Q. Turning your attention, Mr. Shaw, to Defendants' Exhibit 76 for identification, will you please tell us what this data purports to be.

A. Exhibit 76 is a consolidated statement of profit and loss based upon projected sales of 160 additional fillers for Milk Container Equipment Corporation, Purity Pack Corporation and U. S. Dairies Sales Corporation.

Q. In other words, that is a consolidation of your projected statements in Exhibits 74 and 75, is that correct?

A. That is correct.

Q. Now what do you show in Defendants' Exhibit 76, Mr. Shaw, as to the net profit on the projected sales of 160 additional fillers on the consolidated basis?

A. On the consolidated basis it is $91,762.89.

By Mr. Voland: If the Court please, we offer in evidence as Defendants' Exhibits 74, 75 and 76 respectively, Defendants' Exhibits 74, 75 and 76 for identification.

By Mr. McCanna: Well, we object to this as being highly speculative and without any foundation whatsoever.

2435 By Mr. Voland: As to that, if the Court please, I should say that it just happened that the impact of the plaintiff's notices to the trade coincided with our com-

mencement of operations. We have offered here the best proof that the nature of the case permits.

We haven't had any actual operating experience except for a few weeks when the plaintiff's conduct of which we complained impinged upon us. I know of no other way to do it than the way we have done it.

By the Court: Well, I don't know. I will receive these, and you may discuss the admissibility and the weight in your briefs.

By Mr. Voland: Very well.

(Said documents, so offered and received in evidence, were marked respectively DEFENDANTS' EXHIBITS NOS. 74, 75 and 76.)

By Mr. Voland: You may cross-examine.

By Mr. McCanna: No cross-examination.

(Witness excused.)

* * * * *

2437 And thereupon, the plaintiff, to further maintain the issues on its part, introduced the following evidence in rebuttal.

CLARENCE T. FISHLEIGH, called as a witness on behalf of the Plaintiff, in rebuttal, having been previously duly sworn and examined, testified further as follows:

Direct Examination by Mr. McCanna.

Q. Mr. Fishleigh, referring to the Engels et al. patent, 2,542,239, did you hear Mr. Deletzke's explanation of the structure and the operation of this patent?

A. Yes, I did.

Q. And do you consider his explanation to be a full, complete and accurate explanation of the structure and functioning of this Engels et al. patent?

A. No, I do not.

Q. Will you please briefly explain your understanding of the structure and functioning of this Engels patent, particularly pointing out those points in which you believe Mr. Deletzke's explanation was incomplete or in

2438 error?

A. In the first place, I should like to point out that the Engels patent does not teach, nor suggest, nor

disclose any apparatus for maintaining a constant hydrostatic head of any material in any part.

I would like to refer just briefly to one quotation to cover that point, to start with.

In column 6, beginning in line 55—perhaps it is 56:

"It will also be understood that the amount of variation in the hydrostatic head on the dough or batter in the extrusion chamber 10 between the limits 46 and 48 is so insignificant, when added to the air pressure applied to the extrusion chamber 10 above the dough or batter, that the scaling of the deposits produced by the machine is exceedingly accurate * * *"

In other words, it does not say that the level of the liquid, or of the dough is maintained at a constant level but the variation is such that when added to the air pressure above it, that the total is not much. That is, the variation is not much of the combination and that is quite
2439 similar to the situation that existed in the Kwik Kafe machine, Defendants' Exhibit 3, where we discussed a variation of 8, or where there was discussed a variation of 8 inches in level between the full condition of the canister and the low, and it was pointed out that if you raised the canister high enough, that that variation, although quite considerable at a low level, would be somewhat insignificant.

And, it is not merely a case of a matter of some slight degree difference, because the operation of the machine is such as to preclude the maintenance of a constant hydrostatic head or a constant head of the dough.

I would like to explain the operation. Starting, if we may, at the time when the level of the dough has been decreasing, dropping, and is just about to reach the level 48, as shown in Figure 2 on the enlargement of sheet 1 of the drawing of the Engels et al. patent 2,542,239.

I have enlargements of sheet 1 and 3 on the easel and if we may, it would probably help to mark them for identification.

2440 Q. Yes.

By Mr. McCanna: Will the Reporter please mark the charts?

By the Witness: I will mark them if you give me the numbers.

By Mr. McCanna: 117 and 118.

By the Witness: May we mark them 117-A and 117-B?

By Mr. McCanna: Yes. That will be satisfactory.

(Thereupon said charts were marked respectively Plaintiff's Exhibits 117-A and 117-B for identification.)

By the Witness:

A. Under the condition which I have just pointed out, the valve 36, to which I am pointing, in the more or less middle, up and down and toward the right of the Figure 1, is closed.

The valve 30 on the lefthand side is closed and air pressure is admitted to the chamber 10, that is, the upper part of the chamber 10, through the pipe 28 and the valve 30 and is maintained—

By the Court: Now, wait a minute. Wait a minute.

2441 Through what? Through the pipe?

By the Witness: Through the pipe 28 and the valve 30 and then the pipe 32, of course.

By the Court: Yes.

By the Witness:

A. (Continuing.) Your Honor will note the arrow pointing in, indicating the flow of air pressure. At the same time, the valve 22 will be closed in the position shown in this figure so that we will have a level of liquid, or of dough, up a little beyond 48 and air pressure above.

During that time, the conveyors are running underneath the mechanism, bringing dough pans under the opening 14, and air pressure is intermittently applied to the mechanism 18, which controls the valve member or plate 16 to open and close the port 14.

When the valve 16 is opened, the air pressure forces a certain amount, a predetermined amount of dough out through the valve 14. That is regulated on a time basis, and then the valve 16 which includes a knife edge, is

2442 closed, cuts off that amount of dough.

That goes on with a repetitive sort of action. When the dough reaches the level 48, which, as your Honor will note, is just at or just slightly below the probe 44, the electrical contact or probe 44, current through 44, is interrupted and the operation of the machine—that is, the operation of the conveyors and the operation of the valve member 16 and the pneumatic cylinder 18, is stopped.

Then the valve 30 is closed. Valve 36 is opened, relieving the air pressure in the chamber 10 above the dough, and the valve 22 is opened to permit a new charge or an additional charge of dough to fall down or to come down by gravity, flow down by gravity from the container 20. And that proceeds and continues until the level of the

dough has been raised from the line 48 to the line 46 in the container 10.

At that point, contact is made through the probe 42. The valve 22 is then closed. Valve 36 is closed. Valve 30 is opened.

The conveyors are started up again and the operation, the timed operation of the pneumatic cylinder 18, is
2443 started up again and it continues then until the dough drops, the level of the dough drops again from 46 to 48, at which time we then go through the cycle again that I have just outlined.

Now, if one put the two probes close enough together to attempt to maintain a head there, this device would not satisfactorily operate. For instance, it would be impossible to have dough flow in from the container 20 to the container 10 as long as air pressure was maintained above the dough in the container 10.

If air pressure was down in that portion, if we opened the valve 20, the air pressure would resist the tendency of the dough to run down so that actually, this is more in the nature of a refilling operation as when the dough gets to a given lower level, as low as they feel they can operate safely without the air pressure blowing through the dough, that is, if you go down too far. I am sure your Honor would appreciate the fact that instead of blowing out a certain amount of dough, that the air would blow through the dough and interrupt and interfere with the orderly proce-
2444 dure and the orderly deposit of material.

So that, in this case, we do not have a constant hydrostatic head of material maintained. We have a refilling operation somewhat as, shall I say, just the reverse of what we have in a sump pump.

I have a sump pump with an electrical connection that, when the level of the water gets to a certain height, it turns on the pump, it pumps out from the sump until the level gets down to a low point and then it shuts off.

This is just the reverse of that principle. When the level here gets to a low point, it turns on the mechanism in a way that fills up the tank. When it gets to the high point, it shuts off.

2445 Just a word about the construction shown in Figure 8.

There, the patent shows a float switch—not a float valve, but a float switch, and the construction is such, and I can say, that the mercury type of switch such as is illustrated

there, has characteristics so that it likewise operates in the same way that the floats of Figure 1 operate.

That is, there is a definite interval between the point, the flow line position of 304 where the dough has reached the low level and we make contact through the switches, corresponding to the probe 44, and the point—or, rather, we break that contact and the point shown in dotted lines or dash-dot lines where the mercury would be swung to the other side and would make contact at the other end of the device.

Now, there is nothing said in the patent that I have been able to find as to the exact amount of pressure maintained in the chamber 10 above the dough, but, my own experience with that sort of thing would indicate that there must be a reasonably sizable pressure in there.

2446 I would think that it would be well above the 3 or 4 pounds that we have seen in some of the liquid filling machines such as the Warren patent.

Q. Now, Mr. Fishleigh, I have a general question: Does the level of the top of the liquid in a container always determine the effective hydrostatic head acting upon a valve orifice?

A. No, it does not.

Q. And would you please explain what you mean?

A. The effective hydrostatic head that will cause liquid to run through an orifice, depends or is the difference in the total hydrostatic head on one side and the pressure on the other.

In other words, if we have a hydrostatic head of one foot on one side of the orifice and we have a resisting pressure either by way of hydrostatic head or some other pressure on the other side of the orifice, the effective head will be the difference between the two.

For example, if we had—well, if we had a container and an orifice at the bottom and instead of running that out into a vessel below the orifice so that it had a free opportunity to run, suppose we were running it into another tank

2447 and say on the one side the level was one foot and on the other side it was 4 inches; the effective hydrostatic head acting upon that orifice would be the difference between the head on one side and the other so that if we had, say, a fixed head on one side and a variable back pressure on the other side, it would make quite a difference.

We don't have a constant hydrostatic head, although we might have a constant level of liquid on one side. We

might have a similar situation to that in the case of the Fagan and Mojonnier patent that has been discussed here where there is a liquid level on one side and a vacuum on the other. To the extent that the vacuum varies, as well as to the extent that the head varies, that is, the level of the liquid in the tank varies, then the effective head acting upon the orifice would vary.

Q. And does that same general rule apply in Ashkenaz?

A. When we get to Ashkenaz, I will point out to your Honor that because of the presence of a long tube in Ashkenaz, that we would be quite likely to have a rather substantial and varying back pressure there so that the effective head to be determined, not only by the level and any pressures or pulsations which might occur in the
2448 little cup in Ashkenaz, the cup 75, into which the bottle discharged liquid, would also be controlled by any back pressure down below.

2449 Q. Mr. Fishleigh, I have a number of questions concerning atmospheric pressure. Is it true that there was atmospheric pressure in the Mojonnier fluid supply container 14 above the liquid?

A. Yes, it is, and I presume—yes. I presume you are referring to this liquid supply container which is marked 14 on Plaintiff's Exhibit 37.

Above the liquid, there is atmospheric pressure.

Q. And is the same true in the accused machine, Plaintiff's Exhibit 40?

A. Yes.

Q. Is it true that the amount of atmospheric pressure varies from day to day or even from hour to hour?

A. Yes, it does.

Q. Does the variation in atmospheric pressure have any effect upon the flow of liquid from the fluid containers in the Mojonnier machines, such as Plaintiff's Exhibits 37 and 39 or in the accused machine, Plaintiff's Exhibit 40?

A. No, it does not. A somewhat similar question was asked me on cross examination and on direct and
2450 for the moment, I was confused with it and I believe implied that it had some bearing on it.

Actually, while there is atmospheric pressure above the liquid, there is also atmospheric pressure out in the open and below the valve and those two balance one another so that it makes no difference.

For instance, we could, if we ran that container or that

machine in a room where we had—in a pressurized room where we had above atmospheric pressure, it would not affect the operation. On the other hand, of course, if we had some sort of a situation where we were discharging into a vacuum, that is, if we built a vacuum chamber around the bottom part of it and were discharging into a fixed vacuum, the variations in the atmospheric pressure above would affect the flow, but as long as we are in the open where the one is below and the one is above, they balance one another and variations there make no difference whatsoever.

By the Court: We will recess at this time until 10:15 tomorrow morning.

Do you think you will take all day?

2451 By Mr. McCanna: Why, I believe we will be through in less than a day. I am not absolutely sure. I think we might finish in the day, your Honor.

By the Court: Do you want me to hold anybody else for tomorrow morning? Do I need to hold anybody for 2:00 o'clock in another case?

By Mr. McCanna: I doubt whether we will finish in the morning.

By the Court: Well, what I am getting at is that I intend to ask you folks to submit briefs after this case is over.

By Mr. McCanna: I know.

By the Court: I am very busy and I have cases waiting. I want to start a case as soon as you are through.

Do you think I can hold somebody else? I don't want you to quit. I just want to know.

By Mr. McCanna: May I have a minute with Mr. Fishleigh on that? We are going through as quickly as we can.

2452 By the Court: I don't want you to go through as quickly as you can. I just want your best judgment as to how much time it will take.

By Mr. McCanna: Your Honor, I believe an hour in the afternoon would complete our direct.

By the Court: All right. There will be some cross, I assume. All right. 10:15 tomorrow morning.

By the Marshal: This Honorable Court now stands adjourned until 10:00 o'clock tomorrow morning.

(Whereupon at 4:30 o'clock p.m., on Wednesday, June 8, 1955, an adjournment was taken in the above-entitled cause until Thursday, June 9, 1955, at the hour of 10:15 o'clock a.m.)

2453 Chicago, Illinois,
Thursday, June 9, 1955,
10:15 o'clock a.m.

Court convened pursuant to adjournment.

Present:

Mr. McCanna.
Mr. McKnight.
Mr. Pillote.
Mr. Allen.
Mr. Clement.
Mr. Voland.
Mr. Houghteling.
And other Counsel.

2454 And thereupon the following further proceedings were had herein:—

By the Clerk: Case on trial.
By the Court: You may proceed.

CLARENCE T. FISHLEIGH, called as a witness on behalf of the Plaintiff, having been previously duly sworn and examined, resumed the stand and testified further as follows:

Direct Examination (Ctd.) by Mr. McCanna.

Q. Will you please refer to the Purvis patent, number 517,127.

On page 1745 of the transcript, Mr. Deletzke said that the Purvis patent has an electrically-operated timer illustrated in Figure 6 of the patent.

Would you consider this to be an electrically-operated timer in the sense of the Mojonnier patent?

A. No, I would not.

Q. Will you please explain?

A. The Purvis patent does show a clock mechanism in Figure 6, and speaking very broadly, that could be considered a timer of sorts.

2455 The Mojonnier patent requires a timer which, when started, energizes the solenoid and continues to run for a predetermined time, and then deenergizes the solenoid.

The timer in Purvis operates quite differently. At one point it energizes the solenoid and that does start the flow of liquid from the chamber or container or reservoir A down into the small reservoir B. That flow continues up to a point, and then stops for reasons entirely independent of the timer. At some later time the timer operates again and changes the position of the valve and the liquid then in the small chamber B flows out until it is exhausted down into the parts which are to be oiled. But the termination of that flow is not in anywise controlled by the timer.

So that while we do have a timer, something like those that are used on neon signs—I had one that was closer to the Mojonnier patent in the 1920's than this Purvis device, in which the clock turned the lights on on the neon sign and then at a later time turned them off, over a
2456 long period.

But the accuracy of this sort of timer and the possible setting of it is not such that it could be adjusted for the Mojonnier type of filling. I would not consider that it was the same as nor the mechanical equivalent of the Mojonnier timer.

2457 Q. Now on pages 1747 and 1748 of the transcript, Mr. Deletzke attempted to explain the operation of the clock mechanism of the Purvis patent and the type of flow of oil produced by the Purvis mechanism.

Did you think that his explanation was clear and correct and accurate?

A. No, I didn't think it was correct nor accurate nor complete.

Q. Will you please briefly explain the operation of the Purvis patent, limiting yourself as much as possible to those features which you feel were insufficiently or incorrectly explained?

A. If we may look at Figures 2 and 4 of the Purvis patent, we will note that the main supply of oil is held in the reservoir A. That is the larger of the two reservoirs shown in Figure 2.

Reservoir A connects with a small passage surrounding the valve stem F' as we see it in Figure 4. That passage is the inside portion of that tubular member marked E.

There is at all times a connection between the fluid in the reservoir A and that tube through the small passages shown in Figure 2, and marked e.

2458 At the bottom of that tube, as shown in Figure 4, is a valve member marked F. The valve member is connected at the bottom of the valve stem F^1, and that in turn is connected to the armature shown in Figure 2, the armature of the solenoid, which I believe is marked F^2.

During a portion of the cycle when the solenoid is de-energized, the valve is in the position shown in Figure 4, held in that position by means of the spring member F^3, which surrounds the valve stem F^1 just below the armature of the solenoid F^2.

In that position the valve closes the bottom of the passage in the tubular member E^2, and no oil can flow out of the reservoir A.

When the solenoid is energized—and the Purvis patent suggests that it may be energized manually or, in the alternative, may be energized periodically or at such time as may be desired by the clock mechanism of Figure 6—but when it is energized, the valve member, together with the armature of the solenoid and the valve stem F^1, are pulled downward.

2459 It does two things in that movement: the first thing is that it opens the bottom of the tube or the passage through the tubular member E. There is a small valve chamber, which your Honor will note in Figure 4, sort of an oval chamber surrounding the valve, appearing to have the designation perhaps C^1, although I am not sure that that refers to that particular part.

That valve chamber is connected with the small reservoir B. So that when the valve is moved down, the tubular member E is connected to the small reservoir B, and oil will be permitted to flow from the reservoir A down through the tube E and into the small reservoir B.

Its flow will continue until such time as the oil reaches the bottom of that small tubular member marked I.

By the Court: I don't see that.

By the Witness: That is in Figure 4 toward the top and the right-hand side.

By the Court: Yes.

By the Witness: That tubular member I is adjustable up and down.

2460 If your Honor will look at Figure 2, you will note that it runs from the reservoir B completely through the reservoir A and through the top of the reservoir A out into the atmosphere.

The theory, at least, of this device is that air will pass

through that small tube I. It will act as a vent so that as the oil tends to flow from A to B, it will flow because the air above it will be permitted to vent through that small tube I.

But that tube is small enough that when the liquid, that is the oil, reaches the bottom of the tube I, it will seal that tube. In other words, it is so small that under the rather low pressure of the hydrostatic head of the oil from A to B, that that will not be sufficient pressure to force oil through that small tube, although it will force air through it.

2461 That tube may be adjusted up and down to control the amount of liquid which is desired, the amount of oil desired to be introduced to the part to be oiled on each cycle of operation. It is definitely a measured quantity.

At some time after the oil reaches the bottom of the tube I and has consequently stabilized, the valve member will be moved again. In the meantime, though, when the valve member F has been moved to the lower position—

By the Court: But not as a result of that B getting full up to the end of that tube?

By the Witness: No, indeed. There is no connection. In fact, if I understand the normal operation of a device of this type, or, shall I say, that I have been familiar with the manually operated devices of this general character, which this is intended to replace, the cycle, perhaps, would be something in the nature of an hour or so or possibly two or three hours.

You would open the valve and it could remain open
2462 for ten or fifteen minutes, although, as the patent says, the reservoir B would be filled up rather quickly to the bottom of the tube I.

But, going back to the second function of the valve F, when it is lowered I mentioned that it opens the passage, or a passage, from the reservoir A and the tube E into the reservoir B. But, there is also a passage from the reservoir B through that valve chamber and down into the tube C^2, which leads, by suitable connections, to the parts which are desired to be oiled.

When the valve member F goes down, it not only opens the top passage, but it closes the bottom passage so as to prevent that oil flowing at that time from B down into C^2 and on to the parts to be oiled.

But at a later time, which certainly, if the device is to

function in accordance with the description and the intention of this patent, will be at sometime after the
2463 reservoir B has been filled, the solenoid will then be deenergized, and as the patent describes or states, the valve member F will be self-retracted to the position shown in Figure 4.

That statement is of some interest here because, as I have pointed out, the structure is clear. The valve member goes down when it is under the operation of the solenoid. When it goes back up, it goes back against the force of gravity and it is the little unnumbered—no, the little spring marked F^3 that forces it up and still, this patent, as far back as 1894, speaks of that operation as the self-retracted valve.

It has some pertinency with respect to my discussion and explanation of the valve member in the accused structure, Plaintiff's Exhibit 40, where it is true there is a spring to force the valve up. The valve would not be held up in closed position if it were not for the spring, and still,
2464 I say that is the normal operation.

If one has a valve which closes against the force of gravity, it is natural to assume, and a common thing, to have a spring perform that function. But after the valve has been returned, upon the deenergization of the solenoid G to the position shown in Figure 4, the measured quantity of oil which is then in the small reservoir B is permitted to flow down through the passage C and C^2 and on to the parts to be oiled.

2465 That, normally, is a relatively slow process and a substantial time is normally allowed.

So that, in summary, the solenoid is energized, the fluid is allowed—the valve is open, permitting the fluid to flow from A to B, a measured quantity of fluid to flow. At a time sufficiently after that to be sure that the measured quantity has come from A to B, the solenoid is deenergized and the valve moved, under the impetus of the spring member, to the position in which the passage from A to B is closed but the passage from B on to the parts to be oiled is open.

Q. Now, Mr. Fishleigh, will you turn to the LaPorte patent 1,166,607, please?

A. Yes, I have it.

Q. On page 1793 of the transcript, Mr. Deletzke said that there was a spring loaded dispensing valve in this LaPorte patent.

Was Mr. Deletzke correct?

A. I think he was not correct.

Q. Will you please explain?

A. There is only one valve connected with the tank 1 shown in this patent and that is the float controlled inlet valve 5.

2466 There is nothing used in connection with the flow of liquid from the tank 1 to the bottle, which in my judgment, can be properly called a valve.

To make that clear, perhaps I should briefly explain the operation of this device.

There is a measuring cup 10 and that measuring cup is connected, as shown in Figure 2 of the patent, to a sleeve 11.

Now, that sleeve 11 is a spring loaded sleeve. That is, the measuring cup and the sleeve are spring loaded because, your Honor will note, that there is a spring fastened between a flange 16 on the bottom of the sleeve 11 and a flange 15 on the bottom of another sleeve 13, through which the sleeve 11 slides.

And, as shown in Figure 1, in the absence of other forces, the spring 17, will tend to hold the measuring cup 10 and the sleeve 11 in its lowermost position, as shown in Figure 1.

There is, in addition, another sleeve 18 inside of the sleeve 11 and that sleeve remains fixed, does not move under any ordinary circumstances.

2467 In the position shown in Figure 1, the measuring cup is filled with liquid because the top of the measuring cup is below the level of the liquid in the container 1.

Now, the sleeve 18 is hollow and has an inlet port or hole 21 at the top or near the top and an outlet opening 28 at the bottom.

Now, both of those openings and the hollow inside of the tubular member or sleeve 18, are always open. There is nothing that closes them.

The operation is as follows:

When a bottle is put in the position of the left-hand bottle, as we see it in Figure 1, and then the fluid pressure is applied to the ram 34 or the piston 34, the platform 32 is raised and as the top of the bottle contacts the flange 16 on the sleeve 11, it moves the sleeve 11 and the measuring cup upward against the spring pressure.

2468 When the level of the liquid in the measuring cup 10 reaches the port or opening 21 in the sleeve or tube 18, since the port 21 is open, and since the port 28 at the bottom is also open—I am checking to see whether—as I look at it now, perhaps the port at the bottom of the sleeve 18 is either 22 or 23. It seems to be another situation where I can't tell too well whether that is a 3 or some other number. It looks like 23 and 22. At any rate, it is an opening in the bottom of the tube.

When the liquid reaches that level, it runs into the opening 21 and down through the tube 18 and into the bottle and it will continue to run.

Assuming that the measuring cup 10 is held in the position shown in Figure 1, with the bottom of the cup at the level of the bottom of the hole 21, the fluid from the cup 10 will continue to run down through the tube into the bottle until such time as all of that fluid has been emptied.

In my judgment, that is not a valve action. A valve action contemplates an opening which is opened or closed and in my judgment, this is not a valve action and the 2469 sleeve member 11 and the measuring cup 10 are not spring loaded valves in any sense.

In passing, I should point out that while there is a float member, a float valve controlling the level of fluid in the tank 1, that so long as the level is above the top of the measuring cup 10 in the position shown in Figure 1, and below the bottom of the opening 21 in the tubular member 18, this device will operate perfectly satisfactorily. It may vary between those two points, without in the slightest varying the amount of liquid which will be dispensed or filled by this machine in the normal course of operation.

Of course, if the liquid dropped below the level of the top of the cup 10, no liquid would flow into the tank. The machine would be inoperative.

And, if the level were permitted to rise up to the level of the opening 21, we would have a continuous flow of liquid and again, the machine would be inoperative for the purpose for which it is designed for.

Q. You mean no liquid would flow into the measuring cup if the level—

A. Was too low.

2470 Q. (Continuing.) —was down below the top?

A. If it were too high, it would flow continuously through the tube 18 and whether or not there was a bottle present and whether or not the sleeve 11 and the measuring

cup were at the top or at the bottom position. But, between those two levels, it makes no difference where it is, and this device does not depend upon nor take advantage of any maintenance of a fixed hydrostatic level for the accuracy of its operation.

Q. Now still referring to the LaPorte patent, is there any suggestion or teaching or showing in this patent of controlling the time of flow?

A. No, there is not. It is contemplated that the bottle would be held in the position shown in Figure 2 for a length of time in excess of whatever time it takes for the fluid to flow from the measuring cup 10, down into the bottle. The amount of fluid depends upon—that is, that is filled into the bottle, depends upon the capacity of the measuring cup 10.

Now, if one were to improperly operate the machine and close—lower the valve, or lower the bottle, I should say,
before the measuring cup was empty, we would not
2471 get a proper fill, of course.

Q. How do you change from pints to quarts with the LaPorte machine?

A. Figure 4 of the device, of the patent, shows the condition when operating under pints.

Your Honor will note that there is a member 25 which has been dropped into the measuring cup 10 and it is contemplated that that—if we assume that the measuring cup 10 as shown in Figure 2 holds one quart, then the plug or member 25 shown in Figure 4, would hold or be of a volume equal to one pint.

So that, when that fixed member or plug was placed in the measuring cup 10, the measuring cup would then have a capacity of one pint. So that, each time it was lowered to the position shown in Figure 1, one pint of milk would run from the reservoir into the measuring cup and when it was raised to the position shown in Figure 2, one pint would run out through the tube 18 into the bottle.

Q. Is that a sanitary process, making a change like that?

A. No. If we were to change from the condition shown
in Figure 3, or Figure 4 of the patent, where two
2472 different sized plugs are used—assuming we were
operating with the condition either as shown in Figure 3 or Figure 4, and wished to change to the operation to, say, quarts, where the full capacity of the measuring cup 10 was required, we would have to take off the top of

the container 1, that is, the portion 6. We would have to reach into the measuring cup 20—or 10, either with hands or fingers or some other outside device and lift out the plug 25 and then replace the cover 6 and the—or the tube 18, which goes—no. The cover 6.

2473 Q. Do you know whether machines of this type would be currently approved by Health Departments in use for filling milk?

A. I have checked that briefly, and it is my understanding that it would not be.

Q. Now referring to the Winton patent No. 2,030,951, on page 1805 of the transcript, Mr. Deletzke described the operation of the valves in the Winton patent.

Do you consider his explanation to be a fair and correct explanation?

A. No, I do not

Q. And why not?

A. I have reread the explanation in the record, and while the detailed statements are probably accurate, the explanation implies, to me at least, that the volume of liquid that was filled into the various containers R, in this mechanism, was controlled by the length of time the valves were held open.

Whereas actually Winton uses a series of measuring cups, and in the normal operation of the machine, and the only operation of the machine which would give satisfactory, accurate, repetitive production filling in a com-

2474 mercial plant, under those conditions the volume of liquid filled into each container depends entirely upon the capacity of the measuring cups 35.

It is true that in normal operation of this machine—first, shall I say this: that in the timing of such a machine, it would be essential and necessary to the proper operation that the valve be held open for a time longer than that required for the liquid or fluid in the measuring cup 35 to flow out and down through the tube 32 and into the container. Otherwise the device would not operate satisfactorily.

Now it is true that in order to increase production that the timing of the machine, the operation of the machine and its cam mechanism, would be such so that there would be as little delay as possible after the liquid had run out of the measuring cup and the proper volume had been filled into the containers R, until the valves were closed

and the machine operated so that the containers R could be taken from the machine.

But it is absolutely essential that that time valve opening be greater than the longest time necessary for
2475 the liquid to flow from the measuring cups into the containers in order to have proper and contemplated operation of this machine.

Q. Will you now refer to the Hothersall patent, 2,222,617?

On pages 1784 and 1785 of the transcript, Mr. Deletzke attempted to explain the operation of the measuring element C of this patent.

Was his explanation complete and accurate?

A. No, I do not think so.

2476 Q. Will you please explain how the volume of liquid that is filled into each bottle is determined?

A. Yes. I think we could best start with the position in the cycle of operations as shown in Figure 8 of this machine.

As shown in Figure 8, we are just past the end of the filling operation, at which time the container b has been filled. The valve member 68 has been returned downwardly and as shown in Figure 8, closes the port just below the valve member 68 so as to prevent any further flow of fluid from the measuring cups 91 or from the tank A down and out the nozzle 64.

Your Honor will note that in that condition, the measuring device 91 is in an elevated position, so that there is an opening from the tank A down all around the measuring unit 91 and between the bottom of the measuring unit and the member or sleeve 63.

In that condition the fluid is permitted to flow or will flow from the tank A into the measuring unit 91 and will flow until such time as the level of the liquid inside
2477 of the unit 91 is the same as the level of the liquid in the tank A.

We might, in order to get—well, no. I would simply say that the level of the liquid which is shown in the measuring unit 91 near its bottom would gradually rise until that level was at the same level as the level in the tank A. With the situation as shown in Figure 8, that would be well up into the neck 92 of the measuring unit 91, or actually, I believe, the measuring unit is C, and what I have been talking about as 91 is the bottom part of that measuring unit.

Then if we turn to Figure 4, we will see the next step in the operation. The measuring unit C is then lowered, and as it is lowered the portion 91 will telescope down into the sleeve 63.

Your Honor will note, of course, that as it gets a little further than is shown in Figure 4, that with the member 63 remaining stationary and the member C coming down, we will tend to squeeze liquid out from the inside of the unit C. In other words, the volume inside will decrease.

2478 That is quite a common situation, where you have any two telescoping members, if you telescope one into the other, unless you have some vent, you will encounter air pressure and have difficulties. If you do have a vent, as you telescope the two members together and the volume inside decreases, whatever you have inside, be it air or liquid, will flow out through the vent. That is exactly what happens here.

There is in the upper portion of the neck of the measuring unit C openings 96, which are shown rather clearly in Figure 5, and through which streams of liquid are shown flowing in Figure 4.

2479 So as you lower the member C, you force the liquid up into the neck beyond the level of the liquid in the container A, that is, up into the neck of the unit C, higher than the level in the container A or reservoir A, until it reaches the bottom of the openings 96, and then it will flow out through those openings and back to the Reservoir A.

Your Honor will note in Figure 5 that the bottoms of those openings 96 are knife-edged bottoms, and the movement of the measuring unit C in a downwardly direction is controlled very accurately, so that when it reaches the bottom of its movement, the volume in the container C and on the inside of the sleeve 63 and up just to the bottoms of the knife edges, that is, the amount which will remain in that measuring unit C is just exactly the amount which it is desired to dispense or to fill into the bottle.

The next step in the operation is that shown in Figure 5. As soon or as soon after as practical, that is as soon after the measuring unit has been filled just to the amount

2480 desired, the valve member 68 is raised. Just prior to that time in this structure the carton B on the platform G will have been raised to the position shown in Figure 5, and the valve 68 will then be raised, permitting the fluid to flow down out of the measuring

unit C and into the carton B, as it is shown in process of doing in Figure 5.

It will be held in that position for a time in excess of the time required for the fluid to flow down from the measuring unit C into the carton B.

The next step in the operation is that shown in Figure 7. The carton is lowered from the position of Figure 5, where the nozzle or rather where the carton surrounded the nozzle. The valve 68 is again closed, and we are back in position ready for the measuring unit C to be raised to the position shown in Figure 8, and have the fluid flow into the measuring unit C again.

Two points in connection with it, as I believe I have indicated, for proper, satisfactory and contemplated operation of this machine:

The valve must be held open for a time in excess of the length of time needed for the fluid to flow out of the
2481 measuring unit C. Likewise, although there is a float valve shown in this device, and although it is contemplated that the level of the liquid in the container A shall be approximately at the level shown in Figures 4, 5 and 6, that level is not at all critical.

It must be maintained below the bottom of the openings 96, or else the accuracy of the measuring would be destroyed, and when the valve 68 was opened, we would have a flow not only of the measured quantity of liquid in the measuring unit C, but also a surplus from the tank A flowing from the tank A through the openings 96 and into the measuring unit C.

To that extent it is important that it be not higher than that. It may drop very materially below the level shown in Figures 4, 5, 7 and 8, without affecting the operation of the machine or changing the amount of liquid which would be measured out and dispensed because, as your Honor will note in the position—let us look at Figure 5. Although this is a different point in the cycle, I believe I can illustrate from that rather easily.

2482 Figure 5 shows the final position of the measuring unit C when the amount of liquid has been determined. In other words, from the position shown in Figure 4 to that of Figure 5, during the course of the time that the liquid is moving out or flowing out of the measuring unit C through the openings 96, measuring unit C is still moving down until it reaches the position shown in Figure 5.

At that point, I think your Honor can see that it would have made relatively little difference whether at the time, as shown in Figure 4 or just below that, the level inside and outside of the container was at the point shown in Figure 4 or was noticeably below, because the telescoping occurs as between the enlarged portion of the measuring unit C and the member 63. So that if you move down there a quarter of an inch, you displace out of that measuring unit and up through 96 a substantial amount of liquid. It is displaced up and the final level determined by the narrowed neck 92.

I can say to your Honor that the level in that container
A could drop quite noticeably, certainly to the bottom
2483 of the narrowed neck portion 92 of the measuring unit C, without in anywise affecting the measurement.

Your Honor will note that in the position shown in Figure 4, the patentee shows a substantial flow out of the container. So long as the level is high enough in A that when the measuring unit C reaches its lowermost point that it will have forced the liquid up to and slightly above the bottom of the openings 96, this unit will operate entirely satisfactorily.

That level in A could vary very noticeably, so that this unit does not depend upon the length of time the valves are open for the accurate filling, and it does not depend on the maintenance of an accurate level of liquid in the container A nor the maintenance of an accurate hydrostatic head in the container A.

In fact, the hydrostatic head between very broad limits has absolutely no effect upon the measuring or amount of liquid which flows into the carton B.

Q. Now, Mr. Fishleigh, will you please refer to the Bowman patent, number 2,462,019.

2484 On page 1750 of the transcript, Mr. Deletzke said that the probes 400 and 401 of the Bowman patent maintained a head of liquid in the container or tank 35.

Was that a correct statement?

A. No, I don't think that that is a correct statement.

2485 Q. Will you tell us why?

A. Well, in my judgment, no head is maintained in the sense of Mojonnier. I can show that best by reference to Figure 3 of this patent.

This situation is again quite comparable to the situation

we discussed yesterday, and which I said was just the reverse of what we have, or what I have, in a sump pump.

This is a refilling device rather than a device for maintaining a constant or substantially constant level of liquid.

While the explanation of the operation of these particular probes 400 and 401 is conspicuous in this rather long specification almost by its absence, there is enough to indicate that this carbonated water container 35 is controlled in this manner, that the material is dispensed from the container until such time as the level drops to a point A.

Now the operation of this device does not depend upon any particular hydrostatic head or level of liquid in the container A. It is simply important that—

Q. That is container 35?

A. Container 35, excuse me.

2486 It is simply important that there be a substantial amount or enough liquid in there so that the rest of the machine will operate.

At such time as the level drops to the point or line shown at A in Figure 3, the valves are operated so as to allow additional water to come in through the nozzle 360 and additional gas to come in through 365, in order to supply additional carbonated gas. That process is continued until some maximum level is reached.

I have looked but have been unable to find any specific mention of it, but certainly from the look of the drawings, I would say that D might well represent the upper limit and A the lower.

So that just the reverse of a sump pump action, when the level drops as far as A, the operation is such as to introduce additional liquid and gas to form carbonated water and raise the level again to D. But it is not in the sense of Mojonnier, or for that matter in any sense the maintenance of a constant or substantially constant level of liquid nor hydrostatic head.

2487 Q. Now on page 1754 of the transcript, Mr. Deletzke said that it would be necessary to have an accurately dispensed volume in beverage dispensing machines such as Bowman.

Do you agree with him?

A. Well, not in the sense that we are talking about it here in connection with the Mojonnier patent, and in the sense it is required for commercial production filling.

I appreciate that if all we were talking about was some minor degree difference, that is, if we had a machine which

was so set up that by just turning a valve or putting a new part in that we could change from one degree of accuracy to another, it would come under the general heading of degree difference and would make relatively little difference.

I do not believe that that is the situation here, and I believe that before the day is over I will be able to demonstrate that rather conclusively to your Honor.

In this Bowman device, as in all beverage dispensing mechanisms that I know anything about, the accuracy is not of the same character as required for commer-
2488 cial filling. It is not required that it be, and they do not operate within that degree of accuracy.

The "Kwik Kafe" machine that we have here is a very typical example of that, and as we will see later there is a very substantial difference in the volume dispensed between one condition and another in that machine, and a volume which would not be satisfactory for commercial filling where we are subject to the control of weights and measures as well as other controls.

I believe that covers it.

Q. I now call your attention to the Warren patent, number 2,515,363.

Does Warren illustrate or describe any structure which does not operate with a pressure head and a pressure flow as distinguished from a gravity head and gravity flow?

A. No. Warren's device is one which would have a pressure head above the liquid under any circumstances regardless of what material was used.

Q. Does Warren suggest that his machine can be used to vend milk?

A. Yes, he does.

2489 Q. Now, if milk were used, how much pressure would there be in the tank 27 above the level of the milk?

A. Exactly the same amount as though a carbonated beverage was used.

Q. In this particular case, he describes that as?

A. Four pounds, with an indication that he provides an additional safety valve so that if that valve—

Q. We have here a chart showing sheet 1 of the Warren patent. Will you please explain from that your understanding with respect to the pressure in the tank 27?

A. Yes.

Q. I believe we are here talking about the possible dispensing of milk.

2490 I have on the easel the colored chart of certain of the figures of Warren, Figures 2, 4 and 10, which has been marked as Defendants' Exhibit 45.

Q. Yes. I see that the chart comprises more than just the sheet.

A. Well, while the sheet is marked Sheet 1, that is, it has the heading from Sheet 1, I believe it was explained that it is a composite of Figures 2, 4 and 10.

In the Warren patent, as shown, it is set up for use with carbonated beverage and a tank 24 is shown as the main container for the carbonated beverage and, as is common in such situations, that tank would be under rather substantial pressure.

Then there is a pipe line 111 with a coupling 112 and a valve also numbered 112 leading up into the tank 27.

Now, the tank 27 is shown in more detail in Figure 10 with the pipe line 111 coming up into the tank.

Then, there is a float valve marked, generally, I believe, as 131, which is to control the level of the liquid in the tank 27. But, the Warren patent indicates that for

2491 carbonated beverages, he wants to maintain a pressure of at least 4 pounds or of 4 pounds above that liquid so as to retain the carbonization in the liquid, it being a common, well known feature of such liquids, that if they are exposed for any length of time to atmospheric pressure, they lose their carbonization and we don't have the carbonated beverage any more; we merely have a rather flat liquid.

So, he, however, does not want to have too high a pressure in that container, so he puts in a pressure regulating or relief valve, carrying the numbers marked generally 122, with a spring 123 and says that that relief valve will hold a pressure of 4 pounds, but, then, in addition to that, he says that in case it does not hold a pressure of 4 pounds or goes bad, that he puts another check valve or relief valve 125 up above and that one will hold around 3 pounds.

So that, for the operation with the carbonated beverage, we have in Warren a hydrostatic head extending from the valve orifice 31, up to the top of the level of the liquid and above that, we have a pressure that would run from 3 to 4 pounds.

2492 Your Honor may have wondered, as I did, as to where that pressure comes from. Is that merely a

pressure which results from the escape of the gas in the liquid or is the fundamental construction of this device such that a pressure of at least 4 pounds is inherent in the device regardless of what type of liquid is used?

And, I can say, that regardless of what type of liquid is used with this structure, there will be, at the start of operations, a pressure of at least 4 pounds.

2493 Supposing, that instead of having a container 24 of carbonated beverages, or beverage, we used some sort of a tank of milk. In order to get that milk from 24 up into the tank 28, we would have to apply pressure to that. Perhaps I can—no, I will go ahead with this explanation first.

At the start of operations, when we were ready to start to put this machine into operation, the tank 27 would be empty, that is, empty of fluid, but would contain air. We will assume at the end of some preceding operation the device was cleaned and put away, ready for the new operation.

As the fluid comes into the tank 27 from the container 24, the air that was in that tank—

Q. Now talking about the milk?

A. As the milk—as milk would come into that container, the air which was in the tank 27, will be compressed. That is, originally it occupied the entire space below the partition 118 and by the time that the milk has filled the container up to the level as shown in Figure 10 and the level at which the float valve will maintain it, the air will have been compressed, the volume of the air will have

2494 been compressed approximately three to one, as near as I can determine just quickly from looking at that device and, if I remember, as I am sure I do because I checked my so-called Boyles law on the relationship of volume and pressure of gases—if I reduce the volume to one-third, let us just assume, to have a definite set of figures to discuss—let us assume that we had three cubic feet of air in that tank to start with; when we finished we had one cubic foot of air, and the volume and the pressure are in inverse proportion, considering pressure on an absolute basis, and under these circumstances, at the beginning, that air would be under atmospheric pressure of roughly 14—oh, 14.7 pounds per square inch. By the time that would be compressed up into this space, and assuming for the moment there was no valve operating, no relief valve, it would be compressed to one cubic foot and its pressure

would be approximately 43 to 44 pounds per square inch, absolute.

And if we take off the atmospheric pressure again to get it back in terms of atmospheric pressure, we would have a pressure up in that tank of in the neighbor-
2495 hood of 29 pounds per square inch, if we had a closed tank.

With the pressure release valve up in the partition 118, this device would then stabilize at the same four pound pressure when we initially filled it with milk that it would stabilize if we initially filled it with carbonated beverage.

And, if, as we were filling, the valve 122 was defective and didn't operate satisfactorily, the check valve 125 would take over and we would then have three pounds.

Now, actually—I believe that with milk, this device would be less accurate than it would be with carbonated beverage because, while I have not checked it, have not built a model to try it, it would be my studied opinion that once we had established the four pound pressure with carbonated beverage, that there would probably be enough gas effervescing from the liquid to maintain that four pound or three pound pressure throughout the operation of the machine.

2496 On the other hand, when we start to operate with milk, at the beginning of the operation, we would operate under the 4 pound pressure, but it is quite likely, since there is no additional pressure to effervesce from the—or no gas to come out of the milk, that by the time we had operated and filled 50 or 100 quarts of milk, that we would have lost our pressure up above and be down to a point—at that point having only a limited hydrostatic head.

So that the variation in fill and accuracy of fill would be just as much if not more in this device operating with milk as the patentee suggests, but merely suggests, in the introduction to his patent under the heading of—or under the portion where he is talking about objects. But he would have just as irregular and just as unsatisfactory a device with milk as with carbonated beverage.

I can say to your Honor that in the normal operation of this machine, this would not operate under a constant hydrostatic head. It would not operate satisfactorily for the accurate repetitive production filling of milk in a dairy or for the filling of aerosols; would not in any wise do the job that the Mojonnier patent is intended for and
2497 which it does do so satisfactorily.

Q. Well now, Mr. Fishleigh,—

By the Court: We will take a few minutes' recess.

(Whereupon a short recess was taken after which the following further proceedings were had:)

By the Court: Proceed.

By Mr. McCanna:

Q. Mr. Fishleigh, on page 1606 of the transcript when Mr. Clement and Mr. Deletzke were discussing the gravity type manually operated fillers, Mr. Deletzke said:

"A. Well, I should say, I believe, that in the filling of bottles such as the Seal Cone type of paper bottle, or certain other receptacles, the operator with the hand type filler could watch and permit as much liquid as he liked to run into the bottle. But the common practice was not to fill a glass bottle in that fashion, by watching the level of the liquid. It was filled until it was full.

2498 "But the operator could certainly determine with the hand type of filler, could fill the bottle half full, a quarter full or completely full, because he could shut it off, just like you would shut off the spigot on a water hydrant when you got ready to."

And Mr. Clement asked:

"Q. When he did this, would he be accomplishing the same function as the timer and the solenoid on this device?"

He was here referring to the Mojonnier machine, Plaintiff's Exhibit 37, and Mr. Deletzke answered:

"A. Precisely. He would be opening and closing the valve as he saw fit."

Do you agree with this?

A. No, I do not.

Q. Why not?

A. Well, in the first place, I don't agree with him that in the sense we are talking about, that is, in the sense of a production job of filling, that with the hand or gravity type of filler, the hand operated gravity type of filler, that a man can take a Seal Cone type of carton or any of

2499 these aerosols, or that type of container, or, for that matter, even a milk container, milk bottle, and fill it partially full as would be necessary for accurate commercial production filling.

I have tried it. In fact, I have a couple of graduates here that I am going to use for another purpose later, and I had quite a substantial little time doing it. It took

me quite a little time to fill those to the exact measurement that I wanted to for the particular purpose that I wanted them for. In other words, even with glass, to stand and operate by hand and try to hit a given level, to say that I am going to put a pint or seven ounces or something of that sort into a container, can't be done.

2500 And, in the second place, certainly it can't be done with any degree of accuracy where you have an opaque container such as a Seal Cone carton. Even with some light behind it, you can tell generally where it is by the shadow, but you cannot tell accurately enough to operate.

So that, when you replace an inaccurate, inoperable, impractical manual operation with a mechanized operation that gives entirely different practical results, we get completely away, in my judgment, from the factor of mere mechanization of a manual movement.

There are many situations where someone does a job perfectly satisfactorily and certainly to merely put a motor on to do that job, is no particular accomplishment.

I know of a somewhat similar situation right here and I offer the suggestion that when someone replaces the manual operation of the elevators that we have in this building that come up and bounce and start and stop and start and dance around a bit to hit a floor, with a smooth operating device that will bring them up right smooth-

2501 ly, that that step—perhaps it has no doubt already been done, that is, in other elevators that we know of, but the step from this manual operation to the smooth acting operation that brings them up to where you want them accurately and promptly and definitely, is more than a mere mechanization and might very well involve invention.

Q. Now, Mr. Fishleigh, I call your attention to the Melikian patent 2,682,984.

A. Yes.

Q. On page 1826 of the transcript, Mr. Deletzke said, with respect to this patent and the machine, Defendants' Exhibit 3:

"The hydrostatic head would be a little higher when the canister is full than when the canister is empty * * *" Is that a fair and correct statement?

A. No. I think not.

Q. What would you say about it?

A. Well, I have made some calculations and I find that the hydrostatic head would be approximately 38 per cent

more when the canister is full than when the canister is empty and, again having in mind the purpose and the goal which we are striving to reach with this type of
2502 equipment, I would not say that 38 per cent variation was just a little higher. I would say it was a substantial amount.

Q. Yes. Now will you please turn to page 1827 of the transcript and read the last question on that page and Mr. Deletzke's answer thereto on page 1828.

A. (Reading.)

"Q. In terms of what effect a change in the level of liquid in the canister has on the dispensing operation.

"Does it have less effect when the canister is raised up in this fashion, as shown in Defendants' Exhibit 3, than it would have if it were located close to the valve?

"A. Obviously it would have less effect when the canister is close to the valve. The amount of tubing you have between the canister and valve, with the exception of skin friction, would make very little difference. It is the actual vertical elevation between the surface of the liquid in the canister and the elevation of the orifice
2503 at which it is discharged that determines the speed with which the liquid will tend to flow through the orifice."

2504 Q. Please turn to page 1829 and read.

By the Court: Let's see, what page is that?

By the Witness: 1827 and 1828.

By the Court: Is that a correct transcript of what he said?

By Mr. McCanna: I believe it is, your Honor.

By Mr. Clement: I think that must have been an inadvertence, your Honor.

By the Court: What?

By Mr. Clement: I think it must have been an inadvertence. The colloquy that follows it is an indication of that.

By the Court: I didn't follow it in the copy.

By the Witness: I have a copy.

By the Court: What section is this?

By the Witness: 21.

By Mr. Clement: 21.

By the Witness: I have a copy here, if your Honor would care to look at it.

By the Court: Section 21?

By the Witness: Yes, sir.

By the Court: Page what?

By the Witness: 1827 was the question, but 2505 the answer is on 1828.

By the Court: Well, I didn't understand him to say that. Maybe he did, but if he did, I think it must have been an inadvertence. It isn't true, is it, that first sentence?

By the Witness: Well, may I say this: I have looked at this and a couple of quotations which are coming after and I quite agree that what he had in mind, from other quotations, might well have been that it would have more effect when the canister is close to the valve and any comments which I may make, may be equally partinent if we change that to say "more."

By the Court: All right. Go ahead.

By Mr. McCanna:

Q. Now please turn to page 1829 and read, starting with the third question on that page and going to the bottom of the page.

A. May I just—as long as we have had this discussion, may I say that I would like to have your Honor bear in mind the last sentence, however, of that answer:

2506 "It is the actual vertical elevation between the surface of the liquid in the canister and the elevation of the orifice at which it is discharged that determines the speed with which the liquid will tend to flow through the orifice."

By the Court: Yes, I will bear that in mind.

By Mr. McCanna:

Q. Are you now referring to page 1829?

A. (Reading.)

"Q. Yes. The level of the liquid drops three inches, and the entire distance from here to the initial level of the liquid was 30 inches.

"A. I would say in that type of mechanism, with the—

"Q. How much is that in terms of percentage?

"A. Well, it is 10 per cent of the actual 30 inches, but that is

"Q. So that is a 10 per cent drop in hydrostatic head, is that right?

"A. Yes, but it wouldn't make that much difference in the discharge because you have all sorts of other factors."

2507 Q. Now please turn to page 1830 and read, beginning with the second question and continue on 1831 to the end of the answer which begins at the bottom of page 1830.

A. (Reading.)

"Q. So with the same variation in terms of inches in the level of the liquid, in the case where you have the canister located at the high point, you get a relatively low actual variation in the hydrostatic head, is that correct?

"A. Well, the greater or the larger the hydrostatic head, the less important become the variations in it.

"Q. And the higher the level above—

"A. Yes, the higher the level above the extension valve, the less important become the variations in the level of the tank. But those are not the important factors.

"The important factors are the resistance supplied by the elements in the valve and the resistance supplied by the tubing. They are the important factors in orifice flow."

2508 Q. Are these several portions of testimony by Mr. Deletzke consistent?

A. No, they are quite inconsistent, even disregarding the inconsistency of the first statement, which perhaps was an inadvertance.

Q. Now will you please explain to the Court just how a change in level of the canisters in the Melikian machine would affect the amount of fluid dispensed by the machine?

A. It is quite true that if I am trying to calculate the flow through a system, such as we have in the Melikian patent or in the Kwik Kafe device, that I must know considerably more about the device than merely the head and the size of the orifice, and for that matter, the time that the valves are open.

It is true that there are additional factors which affect the flow or that enter into it, such as orifice factor and the like. But once that I have determined that we have a given flow and a given head with a given orifice and a given time, within rather broad limits, if we multiply the head by 4,

2509 we increase the flow by 2. That is, the volume dispensed increases as the square root of the head. That is not perhaps theoretically absolutely accurate, but practically, it is very, very close to that.

In other words, within normal ranges of flow, these other factors of skin friction, passages through the valve, and resistance, and that sort of thing, remain relatively constant.

It is true, of course, that if we attempt to carry that too far, if we have a tube that will handle, let us say, two cubic feet of liquid per minute, if we attempt to run that up to 2,000 we would introduce factors of resistance and get quite off of the performance of the formula we have discussed previously. But within reasonably normal limits, those other factors fall into insignificance, and from a practical standpoint we can say if we multiply the head by 4, the volume will increase by 2, that is, the square root.

2510 So that where on the one page Mr. Deletzke said that the variation in head was the important point, that is the one that I called your attention to in the quotation where the first paragraph we thought was inaccurate—that I believe he was quite accurate about. But in the later quotations, in which he said that was not the important factor in the variation, that is, if you vary from 33 to 30 inches head, that that wasn't the important factor and it wouldn't be a 10 per cent variation, these other things would be critical, I think he was completely confused and completely incorrect in the explanation.

Q. Now, Mr. Fishleigh, referring to the Melikian machine, Defendants' Exhibit 3, on page 1833 of the transcript, Mr. Deletzke said of the machine, Defendants' Exhibit 3:

"That is the fluctuation of the level of the liquid in the canister, as I believe was demonstrated yesterday afternoon, is relatively negligible."

Do you believe that the fluctuation of the liquid level from full to empty container is relatively negligible?

2511 A. In terms of a coffee vending machine, and having in mind the absence of any real requirement of accuracy in such a machine, I would say yes. In terms of a commercial filling machine, definitely no.

By Mr. Clement: Mr. McCanna, didn't that question refer to successive dispensing operations rather than full and empty, as you are talking about now?

By Mr. McCanna: Well, let's look.

By Mr. Clement: He says "as was demonstrated yesterday afternoon", and the only demonstration we made was successive filling operations.

By Mr. McCanna: Well, I am quoting from the record at page 1833. The quotation is correct, Mr. Clement.

By Mr. Clement: I am not quarreling with the quotation. I am saying that we were talking about successive

filling operations, not a full canister as against an almost empty canister.

What he said is that the fluctuation of the level of
2512 the liquid in the canister as was demonstrated yesterday afternoon is relatively negligible in terms of what effect it has on the accuracy of the filling operation. He is talking about successive fillings.

By Mr. McCanna: I believe the witness has answered that.

By Mr. Clement: I would like the witness to say whether he would say the same thing when we are talking about successive fillings rather than as against a maximum canister and a minimum canister in terms of the amount of liquid in the canister.

We had two demonstrations, one with ten ounces and the next one with ten ounces, and I didn't see much variation there.

2513 By the Witness: Since you have asked it, I will say this: that of course, as between successive fillings, there is much less variation. I took the trouble to look at the device the other day, and when it was filled into a beaker or a measuring cup where the area was quite wide, there was not a very substantial difference.

But I can refer you, if you care to, to my notes which said, as I checked the witness, where he said a certain figure, my first one said "That much plus," and on the second filling, I said "That much."

Now it wasn't an accurate enough thing that you could tell very closely, and if that was the point, it has very little pertinence here. That perhaps is the reason for discussing it, to make it perfectly clear that that demonstration only went so far as successive operations, and to whatever extent, if any, this operation attempted to carry over to the broad principle that had been discussed here as between the top and bottom filling of the canister,
2514 to carry that demonstration over as proving anything, it was absolutely misleading and incorrect.

By Mr. McCanna:

Q. Then would you say, Mr. Fishleigh, that the demonstration which was made here in the court room of this Kwik Kafe machine gave a complete and correct picture of the operation of that machine?

A. I think it gave a correct picture of that portion as it was operated. I have no quarrel with what happened

there. I think it would have been better to have had it in terms where we could tell a little bit more closely between, say, 10 and 10½ or 10 and 11, which would have a substantial variation.

However, it certainly did not give a complete picture as indicating what, if any, connection this Kwik Kafe machine has with the issues of the patent in suit.

Q. Would you care to explain that any further at this time?

A. Yes. That demonstration tended to indicate accurate repetitive filling. I have calculated the variation on that machine from the top, that is, a filled condition, to an
2515 empty condition, and I find we get approximately a 38 per cent variation in the head in that machine from the time the canister is filled until it is empty.

Theoretically, according to my calculations, that should make approximately a 17 per cent variation in the amount of liquid filled. In other words, the amount of liquid filled when the canister was completely full would be about 17 per cent more than would be filled with the canister completely empty.

That, in my judgment, is a pertinent factor here. It makes relatively little difference whether, as between a No. 10 and a No. 11 in a series of 150 fillings are enough different that you can see the difference looking at them as it is poured, perhaps, into a cup of coffee.

But it does make a great deal of difference as to the practicability of such a machine for a commercial filler, whether you get 17 per cent more at the beginning of the run than you do at the end of the run.

2516 Q. Were those figures obtained from actual testing of this Defendants' Exhibit 3?

A. No. Those figures which I have just quoted were theoretical figures made from measurements on the machine. However, after court last Friday, I did make some actual tests on the machine.

Mr. Clement was here and operated the machine. I had arranged with Mr. Dempsey to come back on Friday afternoon to operate it for me, but somehow or other Mr. Dempsey forgot about it. He called me about two hours later and said he had forgotten. But Mr. Clement kindly offered to operate the machine for us, and we did operate it.

We found with a particular setting, which Mr. Clement worked out that came somewhere close to what I was interested in running, that with the canister containing just

one pint of liquid, on two successive operations we got 195 cc's and the next one 191 cc's, a variation there, your Honor will note, as between two successive fills of 2 per cent. That is four units in 195, 2 per cent. The average of those two runs was 193.

I have refilled the graduate at your Honor's right
2517 with 193 cc's of liquid which is exactly what we got from the Kwik Kafe machine, Defendant's Exhibit 3, the average of two runs, with one pint of liquid in the canister.

Then we filled the canister to a point about three-eighths of an inch from the top of the canister, and we ran two successive runs there, one of which had 225 cc's and the other 222 cc's for an average of 223½. That is the amount in the graduate at the left.

I am sure that your Honor can see that that is a quite substantial variation, and will not need to know too much about the requirements of weights and measures to know that a machine which would vary that much in the course of a simple run would be quite unsatisfactory.

I have calculated, as between the amount of liquid filled on this test when the machine was filled, that is, to three-eighths of an inch from the top of the canister, as compared to what was filled when the canister was empty, and the amount when the canister was full was just 16 per cent more than the amount when it was empty. I think from that—

2518 By the Court: I am just smiling because I figured that one column is 5 inches tall and the other was 6, and the difference was about one-sixth. I was just smiling at the accuracy of my eyes.

By the Witness: Well, I have smiled several times since running this test at the similarity and the close approximation between the percentage variation in the actual test, which was 16, and the percentage variation by theory, by calculations on the machine, which was 17 per cent.

If your Honor will recall—

By the Court: Let me interrupt. In this Melikian patent, there were solenoids there, weren't there?

By the Witness: Yes.

By the Court: To control the valves, and instead of the float valve, he suggested raising the height of the—what do you call that?

By the Witness: The level of the liquid in the
2519 canister.

By the Court: Yes. That that obviated the necessar · of the float valve. Is that the suggestion?

By the Witness: Not quite.

By the Court: What is it?

By the Witness: The Melikian patent says nothing whatsoever about the location of the canisters and any effect upon the hydrostatic head.

By the Court: Well, there isn't anything in the place of the float valve except raising the canister, is there, in the Melikian patent? What I am getting at is, why is it necessary to spend so much time on the Melikian patent?

Maybe that ought to be addressed to your opponent, that question.

By the Witness: I can answer it as far as I am concerned.

2520 By the Court: I can see in the Melikian patent if you took a thousand-gallon tank with a vast area, and set it up at a great height, taking out one cup wouldn't make much difference, and it probably wouldn't make much difference between the first cup and the last cup, if you put it up high enough.

By the Witness: That is correct.

By the Court: Unless you took it out of the pipe.

By the Witness: That is quite correct, and I am glad your Honor has brought it up because I can say right now that if it were a fact that by merely raising the level of the canisters in a device such as described in the Melikian patent to a point, as Mr. Deletzke suggested, of 20 feet, that we would eliminate the variation in the hydrostatic head and still maintain a satisfactory filler, there would probably be little to this patent suit.

The fact is that while it is quite obvious that to raise the level of the canisters to 20 feet you would elim-
2521 inate the variation in the hydrostatic head, it is also a fact, which is probably not quite so obvious, that when you did that, you would have a perfectly inoperative and impractical device. Such a type of device would not, althorgh it had a fairly constant hydrostatic head, would not be satisfactory as a filler.

I have a demonstration set up in the jury room where I believe I can show that to your Honor conclusively after the noon recess.

By Mr. McCanna: If that is satisfactory, I believe we will go on with our questioning, your Honor, to save time.

By the Court: Go right ahead.

By Mr. McCanna:

Q. Now will you please refer to the Ashkenaz patent, No. 2,254,833.

At page 1742 of the transcript, Mr. Deletzke said that the mechanism shown in Figure 2 of the Ashkenaz patent is so arranged as to maintain a constant hydrostatic head of liquid in the small receptacle 75 immediately below the supply receptacle 22.

Do you believe that that is a correct statement of the functioning of the Ashkenaz patent?

2522 A. No, I do not.

Q. Please explain why you think it is not.

A. Well, the flow of liquid into the cup 75 from the bottle 22 in Ashkenaz is an intermittent and a pulsating flow, and the hydrostatic head is therefore variable and pulsating, especially so with the mouth of the bottle immediately above the opening 74 so that we get the pulsating action of the flow out of the bottle directly transmitted to the opening 74 where the flow goes.

Q. Can you demonstrate that?

A. Yes, I can.

When we go to the jury room after recess, I will have equipment set up to show the action of such a device.

Q. All right.

Now would it be practical to use a small bottle such as shown in Ashkenaz as the main fluid container of a production type filling machine?

A. No, it would be entirely too small.

Q. Would a larger bottle be satisfactory?

A. No, it would be most unhandy and unsanitary and would tend to emphasize the inaccuracies.

Q. Could you use a large tank instead of a bottle?

2523 A. I think it would be possible, but not practical. It would be necessary to fill the tank and then completely seal it because the success of such an operation depends upon the action of a vacuum, maintaining a vacuum or partial vacuum in the tank above the liquid.

Then you would have to run some sort of a pipe, if you had a relatively large tank, some sort of a pipe to run down to the part comparable to the Ashkenaz cup. It wouldn't be a very practical filler if you had a large tank immediately above it. Such a pipe would multiply the difficulties of the smaller Ashkenaz device.

Q. And you can demonstrate that?

A. Yes, I can demonstrate that, also.

2524 Q. That is another demonstration we will make after lunch.

Now at this time I will refer you to the Zsoldos patent, number 1,639,679. I believe we have some charts to put up here.

This may seem a little disjointed, your Honor, but I think we can move ahead and save time by following what questions we have in mind, and then returning.

By the Court: I am not disturbed, go ahead.

By Mr. McCanna: Will the Reporter please mark these charts as Plaintiff's Exhibits 118-A—

By the Witness: One of these has already been marked as Exhibit 116 in connection with Mr. Deletzke's testimoney. Shall we mark the others 116-B, C and D, or give them a new number?

By Mr. McCanna: It may be better to keep following that number. We will mark them Plaintiff's Exhibits 116-B, 116-C, D, and E.

2525 (Thereupon said documents were marked respectively Plaintiff's Exhibits Nos. 116-B, C, D and E for identification.)

By the Witness: Perhaps first I should identify them.

The one which was previously marked as Plaintiff's Exhibit 116 is a photostatic enlargement of sheet 1 of the drawings of the Zsoldos patent 1,629,679.

The one which we have now marked as Plaintiff's Exhibit 116-B is a photostatic enlargement of sheet 3 of the Zsoldos patent.

Those which have been marked Exhibits 116-C, D and E, are photostatic enlargements of modifications of sheet 1 of the Zsoldos patent.

By Mr. McCanna:

Q. Mr. Fishleigh, on page 1845 of the transcript and the following pages, and also beginning on page 2034, Mr. Deletzke explained the operation of the Zsoldos regulating valve.

In your opinion, was his explanation complete and accurate?

2526 A. Well, in my opinion it was not. My understanding of the way this device would operate, or perhaps would not operate, is not in accord with what Mr. Deletzke testified to.

Q. Will you please explain the functioning and operation of the structure of the Zsoldos patent as you understand it?

A. If we refer to the Zsoldos patent specification, page 1, we will note that what Mr. Zsoldos was trying to do was to get away from the use of a measuring receptacle.

By the Court: Get away from what?

By the Witness: The use of a measuring receptacle, such as we have seen, for example, in the LaPorte patent, the necessity of some measuring type of device.

By the Court: Yes.

By the Witness: Because, as he points out there—and we perhaps should bear in mind that this Zsoldos patent is assigned on its face to the Automat Equipment Corporation. Your Honor no doubt recalls that at that period of time, at least, and perhaps even today, that
2527 organization was perhaps the leading exponent of mechanized food vending in the country, particularly in New York, although my recollection is that at one time, for at least a short period, we had one here. I am not absolutely sure of that.

2528 By the Court. Yes. There was one here on Washington Street years ago.

By the Witness: At that time they were the outstanding exponent of that type of thing. Now they had certain difficulty.

They had a device which, in its general operation, was perhaps similar to LaPorte, and they encountered certain difficulties with it, which are inherent in the device, that if you try to operate too fast, if you try to operate a second cycle before the measuring cup 10 in LaPorte—

By Mr. Clement: Your Honor, has the witness indicated the source of his information about this company and the difficulties they had? I object to it as not being well founded.

By Mr. McCanna: I believe he can explain that, your Honor.

By the Court: Well, you can cross examine him.

By Mr. Clement: I don't believe there is a foundation laid for what the company did, however.

By the Witness: I am dividing it into two sec-
2529 tions.

As to what I have said about the being a leading exponent, I know from my own information because as a young engineer I was intrigued with some of their devices, and occasionally in New York ate at the Automat for no other purpose than to see how their gadgets operated. That much I know.

As to the difficulties with such a type of coffee dispensing mechanism, I take it directly from, rather the key to it is here in the Zsoldos patent, where he says what was the trouble and what he is trying to do.

With that and a general knowledge of these other machines, I think I am quite able to elaborate slightly on that to make it clear.

In any event, the measuring cup or measuring device was so set up that one had to wait after the cup was filled, that is, after it was emptied, you had to wait for it to refill before you could operate the device a second time. If no safety device was provided, one might very readily start the operation before the cup was re-
2530 filled, and such a customer would be definitely short-changed in the amount of fluid.

I do know that at the present time that has been overcome by the use of a double acting unit so that while one cup is being dispensed, a second one is being filled. In that way the device may be speeded up considerably. I do know that that is what they are now using in the Automats.

In order to eliminate that, as cited on page 1, column 1, beginning in line 31—

By the Court: Suppose we recess at this time until 2:00 o'clock?

(Whereupon a recess was taken in the above entitled cause until 2:00 o'clock p. m. of the same day, Thursday, June 9, 1955.)

2531 Chicago, Illinois,
Thursday, June 9, 1955,
2:00 o'clock p. m.

Court convened pursuant to recess.

Present:

Mr. McCanna.
Mr. McKnight.
Mr. Pillote.
Mr. Allen.
Mr. Clement.
Mr. Voland.
Mr. Houghteling.
And other Counsel.

2532 And thereupon the following further proceedings were had herein:—

By the Clerk: Case on trial.
By the Court: Proceed.
By Mr. McCanna: If your Honor pleases, we said this morning we have some demonstrations to make in the jury room.
By the Court: Yes.
By Mr. McCanna: Could we adjourn to that room?
By the Court: Yes. Are you ready right now?
By Mr. McCanna: Yes, sir.
(Thereupon the Court, counsel and the reporter adjourned to the jury room, whereupon the following further proceedings were had herein:)

CLARENCE T. FISHLEIGH, called as a witness on behalf of the Plaintiff, having been previously sworn and examined, resumed the stand and testified further as follows:

Direct Examination (Continued).

2533 By the Witness: If your Honor please, I believe you can see a little better on the far side of the table. At least, it was set up with that in mind.
(Thereupon certain articles were marked respectively Plaintiff's Exhibits Nos. 118 to 123, both inclusive, for identification.)

By Mr. McCanna:

Q. Mr. Fishleigh, will you please proceed with your demonstrations?

A. The first three demonstrations that I wish to make, deal with and are directed toward the Ashkenaz patent 2,254,833.

The first demonstration which will be made with an apparatus which has been marked as Plaintiff's Exhibit 118 for identification, consists merely of an ordinary chemical beaker in which about a quarter inch hole has been—a round hole has been made in the bottom.

That beaker, as you see, is about a little over three-quarters full of water. The hole in the bottom is presently plugged with a rubber stopper.

I am going to remove that stopper and wish to
2534 call your Honor's attention particularly to the uniform, steady flow that comes through the hole in the bottom of the beaker.

As the water runs, the level of the liquid in the beaker will slowly drop, but while—if we did make a careful check of the volume that was flowing out, we would find that somewhat less liquid was flowing when the level got down low than is flowing when the level is up at its present point, but throughout that time, your Honor will note, I am sure, that we have a very uniform, steady, even stream of water coming out through the bottom of the beaker.

I am now removing the plug and I am sure your Honor can see that it is a very uniform, a very steady stream throughout (Illustrating).

The second apparatus has been marked for identification as Plaintiff's Exhibit 119. It consists of a plastic member which has been rather carefully made to the size and shape of the cup 75 on this particular enlargement of the second sheet of the Ashkenaz drawing and which enlargement has been marked for identification as Plaintiff's Exhibit 123.

2535 That cup also includes the member 74, 71, 72, 76 and 70. That is, that member carries those various notations. It has been made exactly to that size.

The bottle above is as close as we could come to matching the size of the bottle 22 as it appears on these drawings and I can say that I have checked it and, in general, it comes very close, particularly as regards the size of the neck of the device.

And, it is here mounted with the bottom of the bottle as it is, turned upside down, that is, what would normally be the top of the bottle, placed above the top of the member 70 by just about the same amount, as near as we could see it, as is shown in this particular drawing.

We also have the passage 74 stopped with a rubber plug and I will remove that plug and ask your Honor to note particularly two things: I predict that if you watch the level of the liquid in this cup 75, that is, the cup which corresponds to the cup 75 of Ashkenaz, that you will see, as the bubbles bubble up into the bottle, that that level pulsates up and down quite noticeably and not only
2536 that, but that the stream of liquid which flows out of the passage 74 is quite irregular, quite distinctly different from the stream which we saw flowing out of the beaker and indicating very definitely quite an uneven, a pulsating and irregular stream.

And, I can say to your Honor that it is my judgment that a force as irregular as is clearly evident in that situation, would not be satisfactory. That is, the pulsating head supplemented by the pulsating action of the liquid as it flows out of the bottle and bubbles flow in, would not be such as would adapt itself readily to a production filler for the accurate, repetitive production filling of milk or Freon or similar substances.

Now, I pointed out in court this morning that a little device of this kind would be thoroughly impracticable for a filler and I have attempted to show here, in general what might happen if we attempted to apply the principles of Ashkenaz to a production operation.

I only have a small, a relatively small bottle, but it is intended to indicate and represent a tank, and
2537 then I have a tube coming down from that bottle a distance which would certainly be quite logical and quite to be expected if we were to adopt such a scheme.

And, if your Honor will perhaps come a little closer and watch it here, I would like particularly to have you watch the variations in the level of the liquid in the cup.

2538 In this instance, it is a metal cup about the size—not exactly the same proportions, but certainly of the character of the Ashkenaz cup 75 and I here have

just a hole in the bottom of the cup about, I believe it is about a quarter of an inch.

Now, I would like to let this flow and interrupt the flow from time to time and let your Honor see what happens to the level.

I call your Honor's attention to the fact that when we first started that, for an instant, there was quite a fair, uniform flow and then as soon as the air started to bubble up through the tube, we began to get somewhat of a pulsating effect. In other words, it was smooth. Now it starts to pulsate.

If Your Honor will note now, there is a somewhat higher level. You will notice it is a little longer before we reach the—(illustrating).

Now it is somewhat lower again.

Now, I will let it run for a little while.

Your Honor can see that, the very irregular stream which flows down out of that cup 75.

2539 Your Honor, I am sure, will note that in this instance the level in the cup has now risen to approximately a quarter of an inch from the top. I am sure that it was evident in that situation that as the liquid flowed down until it reached the level of the bottom of the tube, we got a uniform, even flow, but the minute the bubbles start bubbling up into the tube, we get a quite irregular sort of flow again.

Now we are up still higher with the level in the cup. Then when I remove my fingers, we get an even flow until we get to the bottom of the tube and start to replace the water when we get a very irregular sort of flow

I will stop it once more. It is up almost to the top of the cup, so that contrary to what Mr. Deletzke told your Honor, in a device of this type the level of the liquid in the cup 75, at least with the modification that I have shown here, does not stop at the bottom of the opening but comes a considerable amount above it.

On the basis of that, as well as my general engineering perception, I would say that this device was not one 2540 which would be suitable for this type of filling.

Now we have another bit of apparatus, two pieces in fact, which have been marked for identification as Plaintiff's Exhibits 121 and 122. I wish to demonstrate the flow of fluid from the container under varying heads.

I can say that this demonstration is directed toward the

situation that we find in the Newman patent, 711,069; the Engels et al., patent, 2,542,239; the Melikian patent, 2,682,-984; the Bowman patent, 2,462,019; and the Warren patent, 2,515,363.

With these pieces of apparatus we will first demonstrate the action with a 12 inch head in filling a quart measuring cup. I will predict that under two different sizes of stream with that head, we would be able to fill at least a quart of milk into the one quart measuring cup.

Then I will demonstrate the action under two different sizes of nozzle, two different speeds of filling, in filling with an 8-foot head approximately.

I predict that your Honor will see that at that head,
2541 either at one speed of filling or another, that it would be impossible for me to put one quart of milk into a quart measuring cup without overflowing the foam on the side.

2542 I might say in that respect that this is directed, as I have said, toward two types of apparatus shown here amongst the prior art, those in which a substantial amount of pressure is put above the liquid and the filling is attempted under pressure, and those in which by modification we might raise the container to a substantial height so that the variation in head, as the liquid flowed out, was minimized.

We come into a factor which has not, I believe, been mentioned at all so far, and which I don't think your Honor will find in any of the text books. That is a relationship between the foaming of a fluid being filled or the splashing effect and the height from which it is being filled.

I think I can illustrate it, although admittedly it is an extreme situation, in this way: I am sure your Honor would not attempt to get a glass of water to drink from the end of a fire hose. The splashing effect in the ordinary fire hose under the pressure and force that it comes out, and the velocity that it comes out, would make it impossible to fill an ordinary drinking glass with water.

2543 The same thing applies here, and it is a factor which is inherent in the structure described and shown in the Mojonnier, where the head is maintained down at a place where you can do filling of this sort at a rapid speed, while with the other devices with the high pressure resulting either from the super-imposing of air pressure or the like above the liquid or those where we de-

velop a high hydrostatic head by raising the level of the canister would be absolutely impracticable.

I will ask Mr. Mojonnier, because he is a bit taller than I am, to fill the first cup.

May I point out that we have the bottom of the outlet in the tube from the container just about three-quarters of an inch above the top of the container, and with a head of 12 inches from the opening in the small tube to the top of the milk.

Now, Mr. Mojonnier, if you will first release the clamp, the screw clamp, at the same time holding the little pinch clamp, and then release the pinch clamp and leave it released until whatever foam occurs, if it does, just reaches the top just short of the overflow point on the meas-
2544 uring cup.

By the Court: That isn't stable.

2545 By the Witness: I wanted, however, to look at it before we attempted to move it because there we may not be stable enough to move it satisfactorily.

As near as I can estimate at this point, there is about 34 ounces of milk to the top of the fluid level and below the foam level. So that we were able to put approximately 34 ounces of milk into that container.

Now I will ask Mr. Mojonnier or Mr. Kirkland, one or the other or both, to pour that milk back into the container so that we can start another series of three tests with the same amount of milk.

Now I will ask him to insert a petcock into the end of the tube, and then we will readjust the height of the platform upon which the beaker or measuring cup is resting so as to get the same relative location as between the bottom of the petcock and the top of the beaker.

Now if you will operate that again. I think we can use that same one. I don't believe that that little
2546 bit in there will make any substantial difference. In fact, I am sure it will not.

I will call attention to the fact that in this instance there is just a slight additional head because of the additional length from the bottom of the tube to the orifice in the petcock.

Now if you will turn that on and hold it again and let it run until such time as the foam, such as there is, just reaches the overflow point on the measuring cup.

Your Honor will note that that is a substantially slower flow. We are doing it deliberately to show that the rate

at which we fill, that is, the change in orifice size, makes relatively little difference in the amount of foam. We still have substantially the same velocity that we had before.

Again I would say that we have just a shade over 34 ounces of milk with a limited amount of foam on top.

Now if we can hand that down, I would like to keep that particular one. We will set it down on the table.

2547 Your Honor will see that that measuring cup is practically completely filled.

I will now fill the measuring cup at the approximately 8-foot level, using the same size petcock that we used in the last demonstration. I will simply open it and let it run and stop it when the foam reaches the top of the container.

Any more would have run the foam over. In this instance I have about 29½ inches of fluid milk. In other words, at that level—

By Mr. McCanna: Ounces.

By the Witness: Ounces. I guess I said "inches."

By the Court: Yes.

By the Witness: Now I want to modify the orifice by putting a pipe cap in which a relatively small hole has been drilled. That will slow down the filling quite a little bit. In other words, this last filling was quite a bit more rapid than the one with the same nozzle up above.

2548 I will operate it in the same manner, simply turning on the valve or petcock, and letting it run until the foam reaches the top of the measuring cup.

In this instance I have approximately 28 ounces of liquid.

Now I would like to repeat those last three tests with the apparatus marked Plaintiff's Exhibit 122.

In that device we have a quantity of a cleaner called Soil-Off. Soil-Off is a material that has been packaged or filled using a Mojonnier-Dawson filler.

Now, Mr. Mojonnier, if you will operate the upper level. We have approximately the same level that we had before and the same size petcock, a petcock with about a three-sixteenths inch opening.

If you will just turn it on and let it run until the foam, if there is foam, reaches the top of the measuring cup.

We will take this one off, and your Honor will note

while on one portion of it the foam is down a little
2549 toward the front it is right up to the level of the top
of the container.

With this material, I would say that we had approximately 32¼ to 33 ounces, but we have easily been able to put the full quart into that quart measuring cup.

Now we will run another one with the same nozzle, three-sixteenths inch opening. Your Honor will note much more rapid fill with this nozzle, but again the foam coming up, and in this instance I show approximately 2
ounces only of liquid.

2550 Once more, I will put on a lower sized nozzle just so you can see the effect, if any, on the volume of flow, the size of the orifice (illustrating), has.

Your Honor will note that with this pipe cap and the small orifice, I am raising it just a little bit, to approximately the same height that I had before (illustrating).

I have filled the container until the foam is about to run over and again, I have just slightly above 20 ounces.

I have just one more short demonstration that I would like to make, and repeat a situation or an action which is very common, of course, and with which we are all familiar, but I would like to have it in mind as a prelude to some discussion later.

I merely have a pitcher of water and a measuring cup and I am pouring rapidly from the one to the other, from the pitcher to the measuring cup (illustrating) and while, of course, water doesn't tend to foam nearly as much as some other fluids, your Honor will note that there was very rapid filling with a very minimum amount of disturbance, of course, not too accurate.

2551 Inadvertently or otherwise, I missed the full amount, and ran it over slightly.

By Mr. McCanna: Does that conclude your demonstration?

By the Witness: It does.

By Mr. McCanna: May we return to the court room, your Honor?

By the Court: Do you want to cross examine him while we are here?

By Mr. Clement: I would like to ask a few questions while we are here, about this demonstration.

Cross-Examination by Mr. Clement.

Q. Mr. Fishleigh, would it be possible for you to take that beaker on Exhibit 118 and replace the small cup on 120 and run the liquid as you did with the small cup, into that large beaker?

A. I am not sure that I just understand you.

Q. Just replace the small metal cup on Exhibit 120 with this beaker that is in Exhibit 118.

A. Will you give me a hand? I think that can be done. You see, I had a screw driver here a while ago.

2552 Do you have it there?

By Mr. Mojonnier: It is over there (indicating).

By Mr. Clement: It may be necessary to put some water in the bottle, Mr. Fishleigh.

By the Witness: You will have to fill the bottle up again.

By Mr. Mojonnier: We will let it run out.

By Mr. Clement:

Q. May I ask you some questions, to save time, while we are setting this up?

A. Yes.

Q. Is it your recollection that the device disclosed in the Ashkenaz patent 2,254,833 would be used to dispense liquid in the volume of flow illustrated in your first demonstrations with Plaintiff's Exhibit 120?

A. In the volume?

Q. Yes, per second or per any unit of time.

A. Well,—

Q. What type of mechanism is this that is illustrated in Ashkenaz?

A. Well, basically it is illustrated as a mechanism for dispensing fluids into the stomach of an ill pa-

2553 tient, quite a far cry from filling milk in a dairy, but all I can say is that the orifice at this point (indicating) at least, is somewhat smaller in the cup on Plaintiff's Exhibit 120 than it is in the structure shown in the patent drawing.

I believe, although I haven't checked it too carefully, that this orifice corresponds rather closely to the orifice down where the valve itself—

2554 Q. I am speaking about the manner of the relation which you demonstrated, Mr. Fishleigh, and par-

ticularly I call your attention to the fact that the Ashkenaz patent is also used for intravenous feeding.

A. That is correct.

Q. What type of flow would be involved?

A. Quite slow.

Q. Would that make any difference in the flow?

Would you lower the beaker so that there is a substantial head in that beaker?

A. How much would you like?

Q. Well, two-thirds, perhaps, or three-quarters. You may have to raise the bottle.

A. Let us put something else—

Q. Not having done this before, we will just have to see how it works the way you have got it set now.

Now, Mr. Fishleigh, now that you have this exhibit set up, this Exhibit 120 set up with the beaker instead of the small metal container, will you please demonstrate approximately the same thing you demonstrated before, perhaps interrupting the flow after a flow of a second or two.

2555 A. Yes. We have a head of, I would guess, of about four inches.

Q. It appears to be that, yes.

Why is the water not keeping up—why is the water coming from the bottle not keeping up with the flow from the beaker, Mr. Fishleigh?

A. The water—

Q. The water from the bottle is not keeping up with the water from the beaker.

A. Yes. That is one of the conditions we run into, variation in head, hydrostatic head in the unit, which corresponds to the cup 75.

Q. My question was, why doesn't it keep up?

A. I am going right to it. Although the tube leading from the bottle to the beaker is very substantially larger than the opening in the bottom of the beaker, the air bubbling back up through that tube, interferes with the flow and slows that flow down.

Q. If you had a smaller orifice on the beaker, how would it operate?

A. If you had a sufficiently small orifice, I couldn't tell you just how small, but if it was small enough that

2556 the flow out of this head of four inches was less than the volume that could be gotten out of the tube from the bottle, then it would maintain itself.

Q. It would maintain a substantially constant hydrostatic head?

A. Well, it would maintain it closer than it did in this particular cup. I have never made that particular demonstration here, but it would be my impression that we would get fluctuations varying in degree of the same general nature as we got in the demonstration that I made.

2557 Q. I will hand you a quarter, Mr. Fishleigh. Could you reduce the size of the orifice by placing a quarter over the present orifice?

A. No.

Q. I meant the outside.

A. Excuse me.

Q. I am sorry.

A. Well, suppose we leave it there until we are through.

By the Court: Take a screw driver. You can move it with a screw driver.

By the Witness: Did you have in mind—

By Mr. Clement:

Q. Just a minute

A. Well, it is well out of the way now.

Q. Now the water is flowing out of the beaker in a more restricted flow. Is the hydrostatic head substantially constant?

A. There is still some variation in it, not as much, but there is still pulsating as it comes down but it is—

Q. How much would you say it is pulsating, or can you see?

2558 A. I can't say exactly. I would say probably a little over, well, probably ⅛ of an inch, at least a quarter.

Q. I think the orifice is varied somewhat. It is not a substantial variation, is it, Mr. Fishleigh?

A. Well, it seems to be enough to rather definitely affect the flow.

Q. In what way does it affect the flow?

A. Well, we seem to have a somewhat irregular flow. Undoubtedly it is less with a quarter.

Q. I am only asking you, if we had a constant smaller orifice and there was perhaps a quarter of an inch variation in the head of that beaker, would it substantially affect the flow from the orifice?

A. Oh, much less, of course, than with the amount of variation that I had in this cup.

Q. Would it substantially affect the flow?

A. Well, I think, in terms of what we are talking about, I think yes.

Q. What are those terms?

A. The ability to produce an accurate repetitive flow suitable for production terms. I haven't made the test to see.

Q. Is it not true from the demonstration we have just witnessed that if you change the dimensions of the
2559 structure generally illustrated in Ashkenaz, that you would be able to get a constant hydrostatic head and a relatively constant flow from the orifice?

A. No.

Q. No?

A. No.

Q Your answer is "No"?

A. My answer is "No."

Q. What do you base that on?

A. From the demonstration. I don't draw that conclusion from the demonstration.

Q. Which demonstration?

A. The one that we made under your instructions.

Q. And you are assuming a constant orifice size?

A. Yes, the irregularity.

Q. The flow through the beaker, was there a dimension sufficient that it can keep up with the flow out of the orifice?

A. That is correct.

Q. How much was the variation in the level of the water of the beaker, in your opinion?

A. Somewhere around $\frac{1}{4}$ to $\frac{3}{8}$ of an inch.

Q. Let us assume it was $\frac{1}{4}$ of an inch. How much percentage would that be in a head of 4 inches?

2560 A. About 6 per cent, a little over.

Q. That is a substantial variation in the head?

A. In terms of a device where we are trying to maintain an accuracy in the neighborhood of one per cent, of plus or minus one per cent, yes.

Q. Is it your opinion that you obtain a head of that character, of that constancy, in a device that is illustrated by the patent? As an engineer, is that your opinion?

A. Yes, under normal operating conditions.

2561 Q. How about under pressure from a pump such as used in a dairy?

A. Well, in the particular device as designed, though I have seen it and it is my understanding that the practice as representing the best dairy practice, is to put a balance tank in between such a pump and the filler.

Q. And that is necessary, is it, with this patented device?

A. I wouldn't say necessary. It depends on the factors. If the pressure is going to be in excess of 8 pounds with the particular commercial device, that is 8 pounds per square inch, it would be necessary.

Q. Mr. Fishleigh, I will now ask you with relation to Plaintiff's Exhibit 122 which is the bottle of liquid having the detergent, I believe, in liquid.

How would it affect the results which we got in these measuring cups with reference to the amount of foam that was produced by this filling from a rather high hydrostatic head, how would it affect the amount of foam if instead of letting the liquid run directly from the
2562 nozzle into the center of the measuring cup, you directed it to the side of the measuring cup?

A. It would reduce it somewhat. I have tried it and it still is not possible to fill 32 ounces of liquid into that cup.

Q. Is that a common practice in the dairy industry to direct the fluid to the side, particularly in the paper carton filling industry?

A. Yes.

Q. Is that illustrated on the plaintiff's machine, Exhibit 40, I believe it is? No. Exhibit 39.

A. Yes.

Q. Is that—

A. (Continuing) It is also shown in the Hothersall patent.

Q. Is that disclosed in the patent in suit?

A. No.

Q. I think you have answered this question before: Is there anything—I will ask you again, in the light of the demonstrations, is there anything in this patent which teaches this control of foaming such as you have demonstrated here today?

A. Yes.

Q. In the specification?

2563 A. Yes. There is a clear indication that variation in head does cause variation in foaming or splashing and as Mr. Deletzke has testified, they are quite similar

and almost—not synonymous, but at least they rather belong together.

Q. Excuse me, Mr. Fishleigh. Isn't that the teaching of the use of the plurality of dispensers with a different head in each dispenser lined up in a row?

A. Yes, that is, but it is my judgment, as I answered you on cross-examination before, that from that teaching, one certainly can get the teaching for how to control in a single one and, although I heard Mr. Deletzke say, a master of science in engineering, that he couldn't get it from that, I tried it on my wife and I showed her a little diagram which I will show here in court, of the teaching of the patent in suit and I gave her the problem of:

"What would you do from that if you wanted to regulate the splash or foam in a single container?"

She looked at me with that type of scorn that only a woman can show when she thinks you are kind of silly and
2564 told me right off like that, what the answer was.

Q. Is that the type of control that is defined in the claims?

A. That is a single container?

Q. No. The plurality that is defined in the specification.

A. No, no.

Q. Is there any teaching of the size of orifice which is necessary with a particular head in the patent which you have just explained over here that makes a considerable difference in the foam?

A. Now, let's see if I misspoke or if—did I say that the difference in the size of the orifice made a considerable difference in the foaming? If I did, I certainly was—

Q. Well, I thought that was part of what you were demonstrating.

A. I thought not. I used two orifices over here: One a three-sixteenths inch diameter and I recorded exactly 22 ounces as a little of the foam accumulated. It is 22 and about a quarter, as I see it now.

And then I ran it with a smaller orifice of one-
2565 sixteenth or thereabouts and as I see it now, it shows 20—just about 21, that much.

2566 Q. How about the milk container, Mr. Fishleigh?

A. Well, there is a slight difference.

Q. How much difference is there?

A. One is about 27½ and the other is about 30.

Q. Is there a substantial difference?

A. There is a difference which—that much difference could very well occur in the difference in judgment as to just which was the point at which the foam was going or that the foam came toward the front in one instance and toward the back in others.

Q. Would that be a commercially significant difference in the dairy industry?

A. Well, neither one of them in my judgment would be at all practical.

Q. Having in mind that amount of variation that I am talking about?

A. What?

Q. Would it be practical in the dairy industry to have that amount of variation?

A. Oh, no, but the point is that neither one of those operations—the whole point of this demonstration, if I haven't made it clear, is for use in a dairy; that a hydrostatic head of 8 feet, let alone 20 feet, as we indicated
2567 would be necessary to limit or reduce the variations in such a device as Melikian, an attempt to operate at that kind of a hydrostatic head, is entirely impractical and impossible.

Q. One more question, Mr. Fishleigh:

Is the orifice that you used in your demonstrations the same as the orifice in the patented structure?

A. Not exactly. The first orifice that we used with the milk, where we had just the tube, would come not too far from some of the orifices at least that are used in the commercial patented structure.

Q. The orifice of the patent in suit has a ball valve in immediate association with it, does it not?

A. That is correct.

Q. And these do not?

A. No. These are petcock type of devices.

By Mr. Clement: That's all.

By Mr. McCanna: We will return to the court room.

By Mr. Clement: I reserve the right to question the witness further if I wish on cross-examination.

By the Court: Very well.

2568 (Thereupon the following further proceedings were had and taken in the court room:)

By the Court: Proceed.

Direct Examination (Ctd.) by Mr. McCanna.

Q. Mr. Fishleigh, would the amount of foaming and splashing be materially different from what we saw in your demonstrations with milk and Soiloff and with the 8-foot head if you used one of the so-called anti-splash nozzles such as is on the Mojonnier CP machine, Plaintiff's Exhibit 39?

A. Not materially, not so as to change the nature of the results which I indicated. I tried one of the later Mojonnier anti-splash nozzles and at the 8-foot head, the splash was so great that I didn't feel that I could reasonably demonstrate it here.

Q. Would it be practical to use an 8-foot or a 10-foot or a 20-foot head with one of these CP nozzles in a dairy?

A. No. I have seen a Mojonnier machine operating in a dairy in one of the Chicago suburbs with an anti-splash nozzle and at the normal low head that the ma-
2569 chine operates with, and even under those conditions, at that particular time I saw it operating, there was a slight foaming problem at the time. Any more foam would have not been tolerated.

Now, I should point out two things:

First, that it is my understanding that the milk which comes fresh from the homogenizer in the few, relatively few minutes which is normally the time at which it is being bottled or filled into these cartons, foams considerably more than milk such as we used here in this demonstration.

Moreover, that there is a curve shown, of foam, that is, you can develop an empirical curve for foam versus temperature and there is a point just at the very cold temperatures, as cold as they can normally have it, in which the foam again is considerably more down in the range around, I believe it is around 35 degrees, than it is at the temperature which this milk must have been at here today because, although we brought it in iced, it was put up into that container, so that the foam which would be normally encountered in a dairy, would be more than the foam which we illustrated here, both because of the colder tempera-
2570 ture and the freshness of the milk.

So that, at certain times, at least, and under certain conditions, you couldn't tolerate any appreciably greater head than they have in the Mojonnier commercial filler.

2571 Q. Before the—

A. (Continuing.) Certainly a 10, 15 or 20 foot

head would be quite impracticable and quite impossible to use satisfactorily.

Q. Before the noon recess, Mr. Fishleigh, we were discussing the Zsoldos patent.

A. Yes.

Q. You put up these charts, and I will now ask you to please explain the functioning and operation of the structure of the Zsoldos patent, as you understand it.

A. I have added one other enlargement, photostatic enlargement, which I would like to have marked. I would like to give it a separate number.

By Mr. McCanna: We will ask the Reporter to mark this as Plaintiff's Exhibit 124 for identification.

(Thereupon said document was marked Plaintiff's Exhibit No. 124 for identification.)

By the Witness:

A. Plaintiff's Exhibit 124 is a photostatic reproduction of Defendants' Exhibit 11, I believe it is—wasn't that
2572 your Zsoldos with the control valve removed?

By Mr. Clement: That is Exhibit No. 11, yes.

A. It is a photostatic reproduction of that, from which I have removed the float valve that they had put in. So that in the form in which it now appears it is not, while it carries the heading as that chart does of the patent sheet 1, actually it is a modification of sheet 1 in the patent. The control valve or control mechanism 83, 84, 85 has been removed, with a direct flow from the container 10 to the solenoid-operated valve 16, 18.

That, I believe, fairly illustrates in this form the structure described in claim 10 of the Zsoldos patent, and the structure which includes the problem which Zsoldos was attacking with his control mechanism 83, 84, 85.

In other words, he has a solenoid valve in this structure, but he has a variable head, which would vary from the top of the tank to the bottom of the tank. Certainly, after what we have just seen and have discussed, you would get a very definitely different flow for the same given time when the tank 10 was filled with beverage than
2573 you would when it was finished.

Mr. Zsoldos, in his specification, indicates that he appreciated that fact, and set out with one approach to remedy it. He thought that since the liquid level in the tank 10 was bound to vary, and he wanted to put a certain amount of coffee into it or other beverage and run it until

it was more or less empty, that that was something he was, shall we say in the vernacular, stuck with.

2574 So what he attempted to do was to provide a control valve, a control member, which would vary in accordance with the hydrostatic head, so that the flow which he would get out through his pipe and nozzle 17 would be the same regardless of the hydrostatic head in tank 10, regardless of whether he was dealing with a full container or an empty container.

His idea was good. That would fit in. If he had done that and could do that reasonably, he would have had a device, one type of mechanism which would produce the result of an accurately measured or accurate quantity of fluid dispensed each time that the coin was inserted and the cycle gone through.

However, I cannot agree with Mr. Deletzke that Mr. Zsoldos gave us a structure which would do that. I would like to pursue for a moment the movement of the control mechanism 83, 84, 85, under different conditions.

The first question is, how high can that mechanism rise and still function?

I have shown on Defendants' Exhibit 116-C the absolute top position that that float 83 could rise in its control

2575 chamber 12. In other words, the most it could possibly do with the structure described or illustrated in the drawings would be to have the top of the float at the bottom of the solenoid 88, which is shown as projecting into the chamber 12.

I believe Mr. Deletzke at one point indicated that that might have some bearing upon the movement of the float 83.

Now I have indicated at that point, or have assumed at that point, that the level of the liquid was at the top of that float, in the position indicated in this Plaintiff's Exhibit 116-C, in the tank 10. If the fluid level in tank 10 was raised above that point, the float is already at its highest point of operation,

It couldn't go anyplace, and from the level shown in 116-C to the top of the container, there would be absolutely no control.

The next problem, then, is what is the lower limit of practical operation for this device?

That is subject to some questions as to just how far it could go.

I believe that Plaintiff's Exhibit 116-D fairly indicates the lower level at which it could go.

2576 The patent specifies that the upper part of the rod 84 shall be in contact with the solenoid, the armature, the center of the solenoid 88 because whenever the valve 16 or 18 is operated, he says that otherwise you would get a pulsating and irregular action. So he clamps his float in position by means of the solenoid 88 every time that you open the valve and discharge liquid so as to not have an irregular action of that valve.

If that is to be true, then you can't lower the float any further than a point where the top of that rod would still be in contact with 88. Likewise, you couldn't go any further with the liquid under those conditions than the bottom of the float. I will discuss that a little bit later.

I have leaned over backwards, I believe, in showing these two things in giving him the benefit of the doubt, and showing that at the upper level the liquid is at the top of the float, and at the bottom position of the float that the liquid is at the bottom of the float.

2577 But let us assume that that is the case for the present. Any liquid below the point of the level which is indicated in 116-D, if the mechanism was operated below that level, would be without any control whatsoever.

I have made some calculations and find that with the structure which he shows, a control would be provided, assuming that it can go from the position of 116-C to 116-D. That control would only be over about 42 per cent of the liquid.

Someone asked me a question on cross-examination about this gauge out here, and at the moment I wasn't too familiar with it. I think the question was whether normally you stopped using the liquid at the bottom of the gauge. I have since checked—

By Mr. Clement: I don't believe that was the question. The question was whether you wouldn't normally refill it after the gauge would show it was empty or at least a low amount in the tank.

By the Witness: I will be quite willing to settle it that way.

2578 I have checked, however, and I find that while it is normal to refill when the gauge shows that it is empty, it is not normal to put a gauge on the side of a tank of this kind which only covers a portion of its height.

I have checked some old catalogs in my catalog file, going

back as far as 1920, and I have checked some modern installations, and in every instance I find that the gauge runs from the top to the bottom of the tank.

Certainly, as long as that has come up, it would be a most impractical situation with coffee to leave approximately a quarter of a tank full in the bottom and fill a new supply in on top. That would be most undesirable.

Now, I have gone a step further to see what might develop, and in the sketch, Plaintiff's Exhibit 116-E, I have assumed that perhaps the mechanism 83, 84, 85, could go down until the valve member 85 hit the bottom of the chamber 12.

However, in that condition, your Honor will note that the top of that rod 84 is well below the solenoid 88.
2579 There would be no control under those conditions by the solenoid 88 at all. But let us assume for a moment that you could go down that far. I calculated that too, and I find that that improves the situation slightly. That if you could go that far, you would have a control of 53 per cent of the liquid in the tank. The other 47 per cent in this case would be dispensed without any control whatsoever.

2580 Now let us look at two or three other points as we go along.

If we may look back at Plaintiff's Exhibit 116, which is a photostatic reproduction of Sheet 1 of the drawings as it comes, your Honor will note that in that position the valve member 85 is almost to the point where its largest portion is inside of the tube 13. If that is correct, since there is no indication whatsoever of any variation in shape of that member 13—in fact, if we look at Exhibit 116-B, Plaintiff's Exhibit 116-B or Sheet 3 of the drawings, where that is shown in considerably more detail, it is quite evident that the member 13 is a cylindrical member.

So that if we then assume that we moved another, well, as shown on Exhibit 116-B, about three-sixteenths of an inch, or as shown on Exhibit 116, if the control member 83, 84, 85 went up another sixteenth, it would be at the maximum control, the device would be shut off as much as it is possible, and any further movement from the position then of $\frac{1}{16}$ to the position of Exhibit 116-C, would have no control effect at all because the orifice here between 85 and 13 would be the same in Exhibit 116-C as it was
2581 slightly above the position shown in Exhibit 116.

Now that cuts down the possible control still further.

Another little factor, if we look at Exhibit 116-C, which is the highest point we can possibly go with this structure, we will note that we have a spring at the top, which is approximately five-sixteenths of an inch long.

Now the patent very casually comments as follows, referring to the spring member, which is unnumbered in Figure 1, but is numbered 86 in Figure 5—

By Mr. McCanna:

Q. What page is that?

A. I am reading from page 4, column 1, beginning in line 49:

"The spring 86 may be adjusted to compensate for the weight of the float 83 and in this manner render the float more buoyant and sensitive."

I have given that the utmost of weight in showing that in the upper position, as on Exhibit 116-C, that with the spring compressed, the full weight of the float rides
2582 in the water, and have assumed that it went down right to its top. In its extended position, I have assumed that the spring carried the full weight of the float. That is the very most that we could give it.

But now note two things. As I pointed out in Exhibit 116-C, we have a spring of about five-sixteenths of an inch, as shown here, and nothing is described about it.

When we move down to the position shown on Exhibit 116-D, that spring shows approximately thirteen-sixteenths of an inch. If we come over to the situation shown in 116-E, we show about an inch and a quarter.

It so happens that a very good rule of thumb in connection with springs of this sort is that the extended length cannot be more than twice the compressed length, the short length.

2583 Here again then we find a situation in which, as shown at least, and there is no teaching to the contrary or no showing otherwise, this device couldn't operate over as wide a range as I have shown in these two diagrams because of the control of the spring and because of the limitations, the fact that as shown in Figure 5, the valve 85 is almost in its closed position anyway.

So that two things, I think, come from this: First, that although the problem was recognized, just, for instance, as we have known the problem for many years of wishing to have an airplane that would go straight up, the problem was recognized by Mr. Zsoldos. The objections, the diffi-

culties that he encountered were recognized, both with a mechanism such as shown on Plaintiff's Exhibit 124, and also with a measuring cup type of dispenser.

But it was not obvious to Mr. Zsoldos how to give us a device which would function in the way he wanted it. In other words, the solution along his lines of controlling the size of the orifice was not obvious.

Not only that, but your Honor will recall, I am
2584 sure, that Mr. Deletzke told us that this device would operate satisfactorily as shown in the drawings from the point F to the point E, so that it wasn't even obvious to him that the device wouldn't work, even when he had it laid out in front of him.

Q. Does that cover your description of the functioning and operations of the Zsoldos patent?

A. I believe it does.

Q. Now, Mr. Fishleigh, on page 2039 of the transcript, Mr. Deletzke said that the orifice 16 of Zsoldos controls the fluid flow when the valve 18 is opened.

Was that a correct statement of the operation of the Zsoldos machine?

A. No, that was definitely not.

Q. Will you please explain your position on that?

A. Yes.

If the valve mechanism or float valve mechanism 83, 84, 85 is to control even over a part of the cycle, as Mr. Zsoldos says it would, then it is essential that the orifice
16, 18 be larger than the largest possible opening
2585 between 13, 85, because if not, if 16, 18 is smaller and does control the flow, then its control is superimposed upon 85, and 85 no longer controls.

If we are going to have a control action by that mechanism 83, 84, 85, it is inherent in it that the orifice over here at 16, 18 and the balance of the pipes, and so forth, be of such a size as to not interfere with that operation.

Q. Will you now please refer to page 1850 of the transcript?

A. Yes, I have it.

Q. On that page Mr. Deletzke was discussing the device shown in Defendants' Exhibit 11, but without the float valve illustrated in purple.

Will you please read the third answer on that page?

A. (Reading):

"If the float valve had not been added, and in view of

the fact that the reservoir 10 is so close to the dispensing valve, the amount of liquid dispensed would probably vary slightly as the level of the liquid dropped in the reservoir 10."

2586 Q. Do you agree that the amount of liquid dispensed would probably vary slightly under those conditions, and might be as much as 20 per cent?

A. Well, it certainly would vary, but I wouldn't call it "slightly." The figure of 20 per cent, in my judgment, is quite inaccurate.

Q. Have you any idea how much the variation would be in the structure of Defendants' Exhibit 11 between the time the reservoir 10 was almost empty and after it had been completely refilled?

A. Yes, I have.

Q. How much do you think it would vary?

A. Plaintiff's Exhibit 124 shows that structure, but of course, without the float valve. I have measured it, and I find that the hydrostatic head from the valve 16, which in that case would be the controlling valve, to the top of the tank 10, that is, the hydrostatic head when the tank 10 was filled would be approximately three and one-half times, 350 per cent, as much as it would be when the tank was almost empty.

I have calculated that, too, with the device, such as shown here. The amount of liquid dispensed when the reservoir 10 is full would be 183 per cent more than the amount 2587 which would be dispensed, that is in a given time, than would be dispensed with the reservoir empty.

I think that that difference, that 183 per cent difference, is quite a far cry from almost 20 per cent.

Q. Now, Mr. Fishleigh, do you think it would have been obvious prior to April 4, 1948 to have so modified the Zsoldos machine as shown in patent 1,639,679 as to obtain the structure and functioning disclosed in the Mojonnier patent and described in the Mojonnier claims in suit?

A. No, I do not.

Q. Do you think it would have been obvious prior to April 4, 1948 to have so modified the machine described in Zsoldos Claim 10 as to obtain the structure and functioning disclosed in the Mojonnier patent and described in the Mojonnier claims in suit?

A. No, I do not.

Q. On what do you base your answers to the last two questions?

A. Well, I base my answers on several factors.

First, on my own personal opinion, based upon rather extensive work in the development of new products.

2588 I might say in that connection that while I have not done too extensive work directly upon fillers I have had some experience with people in this general industry.

I have done consulting work back in 1933 for the Cameron Can Machinery Company, where fillers were part of the machines we considered.

In 1935, I worked as a consultant with my brother for Standard Cap & Seal, and while our principal interest was in the capping mechanism, we still were concerned and familiar with filling mechanisms.

I have worked for National Can Company, and have done extensive work for the Ex-Cell-O Company, mentioned here so many times.

Now the second basis for my feeling that there is a lack of obviousness in the development of the Mojonnier structure, that is, obvious in developing it from Zsoldos, at least, is the fact that Zsoldos worked up his complicated and impractical structure.

That is, if it had been obvious to Zsoldos that instead of attempting to build a compensating valve and fail-

2589 ing so completely as he did to provide a thoroughly satisfactory and practical structure, if he had taken this device of Claim 10 of Zsoldos and simply put in a little float valve chamber down here, the doing of it would be very, very simple, if it had been obvious enough to him to do it.

He would merely have had to extend across and put a little chamber in here and a little float valve in the outlet from tank 10 down to that chamber. Then his problems would have been completely solved.

2590 As I say, the doing of it, once it was understood what was desirable and what was needed, would have been very simple. The resulting mechanism would have been much simpler, much more accurate, much more practical than the rather Rube Goldberg type of device that he did develop.

Tied in with that, perhaps, is the fact that your Honor may have noted there is not one indication that such a device was ever built. There has been no testimony to that effect. I can say this: I had something of an investigation conducted to try and find it, and while that perhaps is not conclusive, we were unable to find that such a machine had

been in use, at least, certainly, for the last 25 to close to 30 years.

There is one other fact: That Zsoldos was available to this industry for 22 years before Mojonnier. Mr. Dele'zke suggested that the combination of Zsoldos with Fagan and Mojonnier float valve would have solved all the problem.

Well, Fagan was available for ten years prior to Mojonnier and float valves, which would have been equally satisfactory if that was all there was to it, once one knew
2591 that that is what he wanted, float valves that would do the particular thing were available in Beyer for 48 years.

So that over a period of at least 22 years, this material was available to the industry. If it had been obvious, I think that they would very well have picked it up.

In retrospect, it appears to be a very simple structure, a very simple solution. But as of the time, having in mind the two things that we demonstrated today, the fact that raising the level of the supply tank to minimize the variations in hydrostatic head produced an impractical, impossible sort of a device, and likewise that those devices in which a substantial pneumatic pressure was added to whatever hydrostatic head was there, in an attempt also to minimize the effect of the variations in hydrostatic heads, such as Engels, the industry knew that those too were impractical for filling machines.

I do not believe that it was obvious that to depart from that, to simply put in a float, a small chamber with a float valve to control the hydrostatic head, would give you the type of satisfactory and accurate flow that we get with the Mojonnier device.

2592 Q. Mr. Fishleigh, is there any suggestion or teaching in the Zsoldos patent of modifying the Zsoldos structure to produce the structure shown in Defendants' Exhibit 11, or the structure disclosed in the Mojonnier patent in suit?

A. No, there is not. Might I point out in that connection that even with this structure of Defendants' Exhibit 11, that that structure didn't in any wise, that is, what they have now built up, didn't in any wise solve the Zsoldos problem. The Zsoldos problem was still there.

He had a container. Something was said that that is a small supply. I have done a little checking and the number of cups, the number of containers that would be in a normal coffee urn of about eight gallons, would be in the neighbor-

hood of 150 to 175. I know of several, a number of dairies, in which devices of this type are used for production not in excess of 150 cartons per day.

So it was not relatively small in terms of the amount to be dispensed.

This sort of thing wouldn't have helped Mr. Zsoldos at all. He wasn't in a position to have some continuous
2593 supply or something or other. He had a supply. Here it was. As I pointed out before, if someone had put a float valve in a chamber there, they would have solved Zsoldos' problem, but this solution was no better for Zsoldos than what he had to start with.

It is true that in retrospect now it is a device that looks something like Mojonnier.

Q. Last Friday Mr. Deletzke reviewed the mechanical elements of the claims in suit, and indicated that he had trouble understanding some of them and in finding justification for some of the others in the specification.

Do you have the same difficulty?

A. No, I don't think that I do.

Q. Do you care to enlarge on that?

A. Well, I have looked at them rather carefully. I feel that all the structural elements are very carefully explained, rather better than in many patents.

The drawings are certainly accurate. In fact, they are practically identical copies of the commercial structure, Plaintiff's Exhibit 37.

As to the functional statements in the claims, I have reviewed those, and it seems to me that they fall into
2594 two classes: some that are described or explained in the specification, and others that are inherent in the structure which is described and illustrated in that specification.

Q. Now on pages 1895 and 1896 of the transcript, Mr. Deletzke had difficulty understanding how to control the splash effect in a single container. I believe we have covered it to some extent in the examination in the jury room—

By the Court: How much longer is your direct going to take?

By Mr. McCanna: This will probably take three-quarters of an hour.

By the Court: We will take a short recess.

(Whereupon a short recess was taken after which the following further proceedings were then had:)

2595 By the Court: Proceed.

By Mr. McCanna:

Q. Mr. Fishleigh, we were—

By the Court: Go ahead.

By Mr. McCanna:

Q. (Continuing.) —discussing the control of the splash effect in a series of fillers when we were in the jury room. Do you have anything further that you wish to say about that?

A. Well, I have prepared just a little diagram that I thought might be helpful, which I believe I can explain very quickly.

Q. May we have that marked?

A. I will mark it as Plaintiff's Exhibit 125.

(Thereupon said diagram was marked Plaintiff's Exhibit No. 125 for identification.)

By the Witness:

A. I have simply shown here my understanding of the teaching of the Mojonnier patent in column 8 of the Mojonnier reissue patent beginning in line 65 where they say:

2596 "In some installations a number of dispensing units may be placed in a line so that each operates in succession to fill a receptacle. Where it is desired to control the splash in such an installation the pressure head (or liquid level) maintained in each dispensing unit may be progressively different for each dispensing unit."

I have just shown here a series of three. That is, diagrammatically, a series of three figures are here in a row and, assuming that the cartons or containers are being moved in the direction from left to right of this diagram and that the first filler is filling the first third of the carton, it is about, maybe two-thirds of that amount, and the next one is filling the next section and the last one is filling the top part of it. The patent says that if, in a case of that kind, you wish to control splash effect that it may be controlled by progressively changing.

The patent does not say specifically that you decrease it, but, calling attention to the fact that under those conditions you can control it by changing it, to me it is quite

2597 clear that if you would want a little less, you would make your head less and over here (indicating) as

the liquid was toward the top, you would tolerate less splash, you would reduce the liquid level. So, in the upper half of this Plaintiff's Exhibit 125, I believe I have reasonably diagrammed the teaching of the Mojonnier patent in the section that I have just read.

By the Court: Where is that?

By the Witness: That is in column 8, beginning in line 65.

By the Court: Yes. Go ahead.

By Mr. McCanna:

Q. Mr. Fishleigh, there has been considerable reference here to gravity fillers, vacuum fillers and so forth.

Have you made any attempt to classify the various prior art patents relied upon by the defendants into these various groups for ready reference?

A. Yes, I have.

Q. What have you done?

A. Well, I have made a tabulation in which I have grouped them according to the gravity fillers and split
2598 that up into several categories, vacuum filers, pressure fillers and miscellaneous, and, in addition to that, on the same tabulation, I have indicated whether in my judgment those devices are practical for the accurate repetitive production filling of paper cartons in one column and aerosols by the cold filled method in another.

By Mr. McCanna: May we please have that marked for identification as Plaintiff's Exhibit 126.

(Thereupon said document was marked Plaintiff's Exhibit No. 126 for identification.)

2599 By the Witness: I have—

By Mr. McCanna:

Q. Yes, will you please explain that, briefly?

A. Under the heading of "Gravity Fillers", I have first indicated "time controlled Uniform flow with constant hydrostatic head, orifice and time," and the only one that fits into that category is the Mojonnier patent which is practical for filling paper cartons and also for aerosols.

The second group: "Filling or dispensing measured quantity," first "using Containers as measure and filling till Container is full," and second, or "B. Having built in measuring cup or pot."

Third is "Having time controlled variable flow," and fifth, or D, fourth, I should say, "Having manually controlled flow."

The next category of "Vacuum" fillers, where they fill a measured quantity using the container as a measure and filling until the container is full, the Fagan patent fits into that category. And then we have "Pressure", and "Having time controlled flow," under "Pressure"—Newman, Engels, Stevens, Bowman, and Warren.

2600 And then we have a "Miscellaneous" one where there is just a float valve and that is just the Kohr patent.

The others here among the twelve relied upon by the defendants and also including the additional file wrapper references, those are all listed here and all those I have not mentioned, fall, as indicated here, under one or the other of the groups of gravity fillers.

As to the filling of paper cartons, I have analyzed these and it is my studied opinion that only Mojonnier, Winton and Hothersall would be practical as they are disclosed, for the filling of paper cartons.

Your Honor will note that Winton and Hothersall are both structures having built in measuring cup type of volume control.

When we get over to the question of filling aerosols by the cold filled method, we have one "Yes" for Mojonnier and not another structure in the entire list which is satisfactory.

So, this goes back, again, to the statements that I made to your Honor earlier in my direct examination on prima facie, to the effect that there was not in this entire

2601 bunch of prior art, nor, for that matter, in the whole 75 or so that were in the case at one time or another, any structure operating under the time controlled orifice flow principle which would be satisfactory for the accurate repetitive production filling of free-flowing fluids and that is borne out here by this chart where the only two that are satisfactory for paper, are the Winton and Hothersall and those are much more complicated, much more expensive types of machines.

In that connection, I might point out that I showed your Honor the rapidity of filling from a pitcher. One of the features, of course, here is that we maintain in the Mojonnier structure the rapidity and smoothness of flow that we get from the pitcher, at the same time providing an accurate control for that flow as to volume.

2602 I might say that I have checked it some and with

the pitcher, I can fill a quart in approximately three seconds. The closest, the best that I know of in the vacuum type of fillers for a single filling operation is approximately 11.6 seconds, I believe it is. I made a note of some of these figures to tried and—I don't find the note at the moment, but the gravity type comes in between that and when we get to the Mojonnier filler, with the proper conditions, you can fill a quart in the neighborhood of 3.6 seconds.

The production figures on the single spout Mojonnier type of device run as high as 10 quarts per minute on a single valve machine.

The total production figures on some of the other machines, go up, of course. You have heard reference to 90 quarts a minute, but in those cases, it involves a number of filler heads, that is, in effect it is not one filler, as far as complication. It is quite a number of additional fillers in order to get that much production per minute, whereas, actually it is taking approximately two to three times as long under those fillers for the filling in a single unit
2603 and that, of course, is why, one of the reasons why those machines are so much more complicated and so much more expensive than this little simple device.

By Mr. McCanna:

Q. Mr. Fishleigh, referring again to this classification chart, Plaintiff's Exhibit 126, are there any of the gravity fillers in group A and B or any vacuum fillers in which the volume or amount of fluid filled into each container is controlled by the hydrostatic head of the liquid in the filler tank?

A. No. There are none except Mojonnier. In other words, we are talking about the ones in this group A and B here and the vacuum, and the only one is Mojonnier.

Q. I don't believe when we first talked about this classification chart you mentioned the patents just by name that are in this group B.

A. Well, no. In order to save time, I simply pointed out that they were listed here and I don't think it is necessary to repeat each specific one.

Q. That is all right. Now, are there any of the gravity fillers in groups A and B or any vacuum fillers in which the volume or amount of fluid filled into each con-
2604 tainer is controled by the size of the orifice?

A. None in that—none in those groups that you have mentioned, except Mojonnier.

Q. Are there any of the gravity fillers in groups A and B or any vacuum fillers in which the volume or amount of fluid filled into each container is controlled by the length of time a valve is open?

A. The same answer, again. None except Mojonnier.

Q. Will you please, very briefly, summarize the similarity and differences between the float valves and the valves of the Mojonnier patent and the accused machine?

A. Well, I can do that very quickly. As disclosed in the patent, there is no mention of exact measurements. The illustration shown, of course, is the same relative size and the same relative dimensions as P-37, but that, as is common in patents, is not necessarily a limitation.

It is true that—well, in the commercial structure, the float valve is designed to carry about, satisfactorily, about an eight foot head of liquid, which would be approxi-
2605 mately four pounds. That is the particular design of it.

And, it is true, as with most any machine, that if you exceed its design or rated capacity, that it would not hold. If you put too much pressure in that, it would overflow in that instance. However it was perfectly possible to design a float valve of the Mojonnier type, the same general sort for any reasonable pressure that one would wish so that it would operate under any conditions that are found in dairy use.

Now, if with the type of structure shown in Mojonnier, if the pressure exceeds the rated capacity, all that happens is that the valve will open and it is true, there would be an indication that the container would fill up and overflow.

In our court room that would be rather serious, but in a dairy it wouldn't be much of a point because with an operator there, he would see it quickly and it would be a signal to turn off the apparatus and my experience at least, has been that with these dairies, wherever I have seen them, they invariably have water and a degree of milk around on the floor, so that it would not be a serious problem.

2606 The commercial accused device does operate at a somewhat higher pressure—ordinarily it would handle a somewhat higher pressure than the particular Mojonnier commercial device.

However, there is one difference which is of interest. If the pressure applied, coming into the fluid supply container in the accused device exceeds the rated capacity by a substantial amount, where the Mojonnier device would simply open up, the accused device would lock itself shut and if it happened to be on a pump, if it was connected directly to some of the pumps that are used in dairies where they have a pump that will build up, if it is blocked to rather high pressures, there would be a serious danger if this device were used directly connected to such a pump and without a surge tank and without a balance tank, intermediate, there would the danger of serious damage to some of the equipment because of the blocking of that valve.

That is, it gets to a certain place and if the pressure exceeds that, it just cannot open.

Now, as to the dispensing valves—

Q. Well, you mentioned balancing tanks. I wonder
2607 if you could tell us briefly whether that is common practice to use balancing tanks or surge tanks where there is a higher pressure condition because of some particular—

A. Well, it is my understanding it is. When you asked me as to common practice—I have seen them, but I do not pose as an authority on practice all the way through on that.

It is my understanding that the better practice is, wherever you have certain of the more modern equipment, involving some of these high temperature pasteurization and where you do have a pump, that the better practice is to put a balance tank in between. That is a little bit beyond my definite knowledge, however.

Q. You started to say something about the valves, in response to the last question.

A. Yes. I believe you asked me to compare the float valves and the valves—

Q. Yes.

A. Now, as to the dispensing valves, the one feature which we have considered before is the matter of the accused sleeve or nozzle moving down into the carton and I thought it might be of interest to point out that
2608 is not at all a necessary feature.

It is true that in the CP machine, provision is made

for moving the carton up so that the nozzle is down into the carton and in the accused machine, the nozzle moves down into the carton, but I have seen machines in operation of an automatic nature where the carton moves right along and passes under the bottom of the nozzle; the carton is neither raised nor is the nozzle dropped into the container and it fills quite satisfactorily and perfectly satisfactorily and with a nozzle, a so-called twin jet nozzle which tends to direct the flow of the fluid toward the side of the container, the typical anti-splash nozzle.

So, at best, that is a refinement or a little different feature, but not in any way a necessary part of the equipment.

Those are the differences. Otherwise, as I have pointed out, the structures, I believe, are quite similar and in my judgment, the float valves, the floats and valves of the accused machine, are certainly the mechanical equivalent of those in the patent and in the commercial machine P-37 and likewise the valves themselves are the equivalent.

2609 Q. Mr. Fishleigh, have you made a study to determine whether or not the mechanical elements of the claims in suit of the Mojonnier reissue patent 23,830, are present in any of the prior art patents relied upon by the defendants?

A. Yes. I have made such a study.

Q. What did you find?

A. I found that some of the mechanical elements are present in some of the structures and some of them are not.

Q. Did you find any prior art structure relied upon by the defendants in which all of the mechanical elements of any of the claims in suit are present?

A. No.

Q. Will you please explain your findings on that?

A. Well, I have prepared a chart which summarizes my findings as to the presence or absence of the mechanical elements of the claims in the various prior art structures.

By Mr. McCanna: Could we have that chart marked 127 for identification?

(Thereupon said chart was marked Plaintiff's Exhibit No. 127 for identification.)

2610 By the Witness:

A. The lefthand portion of the chart is a reproduction of the claim block which we have considered previously, showing the mechanical elements of Claim 1 of the Moponnier reissue patent.

On the righthand side, I have shown or developed a series of flaps. The bottom flap we could perhaps look at first, which shows, categorically, by a series of "yeses" and "noes" where I find the mechanical elements present in the prior art and where I do not.

Unless you wish, I think we need not cover each one of those specifically.

My studied opinion is reflected in these notes, in these "yeses" and "noes" on the chart, on the top flap.

By Mr. McCanna:

Q. I believe that will be satisfactory but you explain it as you feel best.

A. On the top flap I have amplified the showing for the Zsoldos patent and have indicated that there are no means for supplying fluid to the container 10, assum-
2611 ing that container 10 is a fluid container.

There are no means of supplying fluid to it and no means in that container 10 operable to maintain the fluid in the container or reservoir at a preselected constant level.

We might very well have said that the container 10 was not comparable to container 14 of Mojonnier.

The notes at the right of the "yes and no" column indicate the reasons for my finding of "no" and they correspond quite generally to the explanation that I have given previously in connection with that patent.

In other words, we have no such valves. Then, when I came down to the fifth element, I divided the column for the next three elements. Between the two different valves that appear in Zsoldos, the control valve or regulating valve 85 and the solenoid operated valve 18, you will note that as to the valve 18, we do not have a solenoid and a member extending through the container and an interval timer but those do not apply to 85 and, as to the last element, we have no means to actuate the timer to energize the solenoid, whereby a substantially
2612 constant volume of liquid is dispensed each time the solenoid is energized.

I have pointed out this afternoon my views as to the lack of a disclosure in Zsoldos of any device which will produce the results set forth in that claim.

Now the second flap deals with Engels.

The third flap deals with Melikian.

The fourth flap deals with Ashkenaz, and the fifth flap with Warren.

I believe those are reasonably self-explanatory. Unless you or the Court wish, we can perhaps save time by passing those and letting the exhibit reflect my views on that matter.

2613 Q. Unless the Court wishes. Otherwise, we will proceed to the next.

By the Court: Very well.

By Mr. McCanna:

Q. Will you please explain in detail, Mr. Fishleigh, wherein the mechanical elements of Claim 6 of the patent in suit are not present in the prior art, using the chart which you have prepared for this purpose?

By Mr. McCanna: I will ask the reporter to please mark this chart Plaintiff's Exhibit 128 for identification.

(Whereupon said chart was marked Plaintiff's Exhibit No. 128 for identification.)

By the Witness:

A. This chart has been organized in exactly the same way as the previous one and I believe that here again, unless there is some particular point that you or the Court wish me to cover in detail, that the notes on that chart reflect my studied opinion as to the pertinency or lack thereof.

By the Court: My attention is called to the fact
2614 that I have to go to see about this jury that has been impaneled.

You are not going to get through tonight, are you?

By Mr McCanna: I am afraid not, your Honor.

By the Court: How much more time will you take?

By Mr. McCanna: About an hour, I believe, or three-quarters of an hour.

By the Court: How much time do you think you will take? Do you have any idea?

By Mr. Clement: Perhaps an hour and a half, an hour.

By the Court: Very well. I think we better recess.

Have you finished talking about this Plaintiff's Exhibit 128?

By the Witness: Well, I was saying that the notations here were prepared by me after careful study and they reflect my studied opinion as to the presence and absence and the reasons for that opinion, so that, unless you wish to have me explain in detail, I think we could save time by just passing it.

2615 By the Court: Oh, I can understand it. Well, I think we will recess at this time until 10:10 tomorrow morning.

(Thereupon at the hour of 4:20 o'clock p.m. on Thursday, June 9, 1955, an adjournment was taken in the above entitled cause to Friday, June 10, 1955, at the hour of 10:10 o'clock a.m.)

2616 Chicago, Illinois,
Friday, June 10, 1955,
10:10 o'clock a. m.

Court convened pursuant to adjournment.

Present:

Mr. McCanna,
Mr. McKnight,
Mr. Pillote,
Mr. Allen,
Mr. Clement,
Mr. Voland,
Mr. Houghteling.
And other Counsel.

2617 And thereupon the following further proceedings were had herein:—

By the Clerk: Case on trial.

By the Court: Are counsel here on both sides?

Proceed.

(Thereupon a chart was marked Plaintiff's Exhibit No. 129 for identification.)

By Mr. McCanna: Good morning, your Honor.

By the Court: Good morning. I may have to interrupt you in a moment.

When counsel comes in in this criminal case, let me know, gentlemen.

Go ahead.

CLARENCE T. FISHLEIGH, called as a witness on behalf of the Plaintiff, having been previously duly sworn and examined, resumed the stand and testified further as follows:

Direct Examination (Continued) by Mr. McCanna.

Q. At the end of the day yesterday, did you finish what you wanted to say about Plaintiff's Exhibit 128, your
2618 chart dealing with the claim 6 of the reissue patent?

A. I think so, yes.

I indicated that my opinions were set down on that chart. I think that is all that is probably necessary.

Q. Now will you please explain in detail wherein the mechanical elements of claim—

By the Court: Wait a minute.

(Thereupon the Court gave his attention to another matter on the call, after which the following further proceedings where had herein:—)

By Mr. McCanna:

Q. (Continuing) —wherein the mechanical elements of claim 7 of the patent in suit are not present in the prior art, using the chart which you have prepared for the purpose.

A. I have prepared a chart similar in its general organization to the two preceding charts. It has been marked as Plaintiff's Exhibit 129 and is on the easel and here, I believe that as to the individual flaps for Zsoldos, Engels,
Melikian, Ashkenaz and Warren, that the notes are
2619 clear to indicate my opinion in the matter as to whether those elements are present and, likewise, on the summary flap on the bottom by the "yeses" and "noes" I have indicated whether or not I feel that those elements are present.

I believe nothing further need be said, unless you have something specific that you wish.

By the Court: No, I don't have anything.

2620 By Mr. McCanna:

Q. Now at pages 2552 to 2555 of the transcript, you ran a test for Mr. Clement. That was when we were in the jury room. It was the test in which you used the beaker from Plaintiff's Exhibit 118 as a replacement for

the small cup that was originally on Plaintiff's Exhibit 120 and set it up so that the bottom of the tube leading from the bottle of water was about 4 inches above the bottom of the beaker.

I don't believe the record is clear as to just what happened when you opened the orifice at the bottom of the beaker and permitted the water to run out of the orifice.

Will you please explain, briefly?

A. Yes. As we set the device up, with the orifice at the bottom of the beaker closed, with a rubber stopper, there was a head of about 4 inches of water.

In other words, the water filled the beaker up to the point of the bottom of the tube, approximately. When I opened the orifice by removing the rubber stopper, the water ran out and the head gradually dropped in the
2621 beaker. That is, the top level of the water gradually dropped in the beaker until it seemed to stabilize at a point which I would say, roughly,—not having measured it exactly—was roughly an inch and a half, perhaps two inches below the bottom of the tube. At least, it was between an inch and a half, or an inch and an inch and a half. My recollection would be it was about an inch and a half, and then seemingly stabilized there, indicating that with the 4 inch head, the flow through the orifice was greater than the flow down through the tube from the bottle, in spite of the fact that the inside diameter of the tube from the bottle was 9/16.

Q. Now at page 2602 of the transcript you gave some figures as to the speed of filling with different machines.

Have you rechecked those figures as they appear in the transcript?

A. Yes, I have.

Q. Are they correct as they appear there?

A. Well, I think the transcript correctly states what I said, but I think I misspoke.

I think I said that the—well, the 11.6 figure that I gave for the speed for filling of a vacuum type filler, should
2622 have referred to the gravity and perhaps it would have been better to have said "from 10 to 12 seconds" instead of the specific 11.6, and it is the vacuum that comes between the Mojonnier, and the gravity at a point somewhere—the practice that I have known of at all, was something like 7.6 seconds.

So, I simply reversed, was momentarily confused and reversed the order of the gravity and the vacuum.

2623 Q. You are now talking about quart size?

A. Yes, for a quart container.

Q. Mr. Fishleigh, do you think it would have been obvious prior to April 4, 1948, to have assembled the various elements of the Mojonnier patent into the Mojonnier machine?

A. No. I have given that some study and it is my studied opinion that that was not obvious, particularly that it was not obvious that if such a combination of elements was made, the elements combined in the way they are combined in the Mojonnier patent, that the results would have been obtained which are obtained with the Mojonnier device.

Q. Now in your opinion, is there any functioning or result provided by the machine of the Mojonnier patent which is more than the additive functioning and result of the several elements as they appeared in the prior art?

A. Yes. I believe that there is. There is no place in the prior art in any combination of elements and in the additive functioning and results of the various elements that appear in the prior art that gives the functioning that we get here.

2624 As I have pointed out earlier, in the Mojonnier patent and in the Mojonnier commercial device, it is the first and—outside of the accused machine—I believe, the only machine in which we make use of the time controlled orifice flow principle in a way such as to give a satisfactory machine or mechanism for the accurate repetitive production filling of free flowing liquids.

In that connection, I should say that we, with this machine, maintain, as I think I pointed out in connection with the showing or the demonstrations of the pouring from the pitcher—we retain the accurate, or rather, the rapid and smooth flow that is obtained in pouring from a pitcher into a glass or container, at the same time that we superimpose upon that functioning a very accurate and controlled quantity measurement and also at the same time, it is done with a very simple and sanitary device.

I think it would be well, for a moment, just to take this machine apart to show how readily it comes apart and how simple the parts are and how relatively sanitary

2625 they are, once it has been taken apart.

Q. Will you please proceed.

A. While of course we have pointed out the actual tank

15 on this Exhibit P-37 is merely to indicate the type of tank, nevertheless, the connection that we have is quite similar to the connection that would have to be disconnected in order to get at the filler.

2626 The cover is then removed, and at that time the valve member and the solenoid armature with the connecting rod between them can be taken out. The float vaive comes out very readily, and the stand for the float valve.

Then the nozzle with its connecting members must be removed.

I should, of course, point out that on this particular structure that this union joint between the nozzle and the tank was loose. In the ordinary circumstance you would have to use a wrench and open it up that way. Likewise the connection between the cover and the piping would have to be disconnected by means of a wrench.

But we then have this simple structure, merely the tank and these members that I hold in my hand, all of which come apart very readily and are very simple and sanitary and relatively easy to make.

By Mr. McCanna: I believe that concludes our direct examination of Mr. Fishleigh.

2627 *Cross-Examination by Mr. Clement.*

Q. Mr. Fishleigh, yesterday you produced a chart which illustrated what, in your opinion, was the teaching of the patent relative to the use of a plurality of these dispensers in a line.

Do you have that chart handy? I don't remember the exhibit number.

A. Why, I presume it is here. It is that one on the cardboard.

Q. Yes. This is Plaintiff's Exhibit 125, is that correct?

By Mr. McCanna: Yes.

By Mr. Clement:

Q. I wonder if you would place that on the easel once more, please?

A. Yes.

Q. I believe it was your conclusion from the portion of the patent that deals with this successive filling of a

container that there was some teaching in there about the control of splash effect, is that correct?

A. In a succession of fillers, yes.

Q. How is the control effected? Just very briefly,
2628 what is the main factor which effects the control of splash effect in this chart, Plaintiff's Exhibit 125, or in the process that is illustrated there?

A. In the upper half of it which deals with the three successive fillers?

Q. Yes.

A. Well, it is my understanding that the difference in head; in other words, that we would have less splash effect in a filler operating with a low head than we would have in one operating with a higher head.

Q. Do you recall, Mr. Fishleigh, whether or not Claims 6 and 7 of the patent in suit are limited to—well, I will read a portion of Claim 6, for example, to refresh your recollection:

"A filling machine for delivering an accurately controlled predetermined quantity of milk and other free-flowing fluids for the repetitive filling of containers and the like each in a single complete operation,"

Do you recall that language in Claim 6?

A. Yes.

Q. And the same language appears in Claim 7, do
2629 you recall that?

A. I don't recall the detail, but I think it applies to a single filler. I don't believe that either of those—

Q. I will read a portion of Claim 7:

"in a single complete operation"

It is the same statement.

A. Yes. It has been my understanding that they refer to a single filler.

2630 Q. My question is, is that the claim? I think this morning, just for the benefit of the Court and myself and everybody, if you would be as brief as possible in your answers, we will finish as quickly as possible. I will try to ask questions that you can answer very simply.

So that the control as illustrated in the patent is by varying the head, is that correct?

A. That is correct.

Q. Is one requirement, and an emphasized characteristic of claims 6 and 7, the fact that you have a constant head in the equipment that is defined in those claims?

A. Yes, during the operation. During the period of the time through which it is being filled, yes.

Q. And is it not true, Mr. Fishleigh, that the reason you can control the splash effect in the method illustrated in Plaintiff's chart 125 is because the velocity of flow decreases as you decrease the head?

A. Yes.

Q. Is there a decreasing of the head in the operation of the plaintiff's machine, Exhibit 37, for ex-
2631 ample, during the filling operation?

A. No, and I would ask—

Q. Just a minute.

A. (Continuing.) I will ask you in the light of that to permit me to make one reference back to the preceding position where during the filling of these three units there is no variation in the head in each individual filler.

Q. That is very clear, Mr. Fishleigh, I think.

A. All right.

Q. But again I repeat, the decrease in the velocity of flow is what establishes your control of the splash effect, is that correct?

A. Yes.

Q. And is it true, Mr. Fishleigh, as you fill the container and the liquid rises in the container, the impingement of the flow on the surface of the liquid in the container becomes more of a factor?

A. Yes.

Q. Because the distance between the orifice and the level of the liquid is lessened, is that correct?

A. May I have that question again?

Q. The distance between the orifice in the supply
2632 container and the level of the liquid in the container being filled decreases as the container is filled, is that correct?

A. That distance decreases. You asked me about the impingement before. I am not clear that I answered that correctly.

Q. Well, you said yes, and I assume that is because this level in the container is rising as it is filled and it is getting closer to the orifice, is that correct?

A. I think not. That is why I doubled back on it. I think I answered too quickly, before I fully understood the question.

If you are suggesting that in this situation if the velocity were the same that we would get more splash

effect here than we would over there, I think it is just the complete reverse of that.

2633 Q. In any event, we have established, Mr. Fishleigh, that it is the decreasing velocity of the flow from the supply container which controls the splash effect?

A. I think that is correct.

Q. And it is still your contention that that is the control of splash effect that is defined in Claims 6 and 7, is that correct?

A. Well, yes. I tried once before to explain to you that I do not understand that claim to say that you vary the splash effect during the filling of a container.

Q. What does the claim say, Mr. Fishleigh, if it does control splash effect?

A. It is my understanding—

Q. I will hand you a copy of the reissue patent. Isn't it just a functional statement, a self-serving statement in the claim?

A. Yes. It says:

"whereby the preselected constant factors of said hydrostatic head in the supply container and said orifice delivery produce relatively rapid filling of said in-

2634 dividual container and control of splash effect of the fluid in its discharge into the said individual container,"

Q. It says:

"preselected constant factors"

doesn't it?

A. That is right.

Q. That includes the hydrostatic head, doesn't it?

A. That is correct.

Q. So you have a constant hydrostatic head as a means of controlling splash effect, is that correct?

A. Yes, the value of the hydrostatic head being such, and under these circumstances, together with the orifice, that we do have a controlled splash effect.

Q. Where is that teaching in the patent?

A. I think that is quite inherent in this device.

Q. Inherent in the device?

A. That is correct, and that in designing—

Q. Just a moment. Will you please explain what you mean by "in the device" when we are talking about control of splash effect?

A. Well, the place that you and I don't understand

this the same is as to what control of splash effect
2635 means in this claim.

I don't understand that it means that you vary the splash effect during the process of filling.

Q. That isn't my understanding, Mr. Fishleigh.

A. It isn't?

Q. No, it isn't.

A. All right. Then my understanding is that by proper selection of the hydrostatic head and by the maintenance of the hydrostatic head and the constant orifice factor, having selected that so as to control the splash effect, will give us a minimum of splash effect, such as we got at the upper level or low head yesterday at our demonstration; that we keep it within reasonable proper limits as compared to what we would have under the higher heads that we tested yesterday.

Q. Then I take it that your understanding is that this patent teaches that if you have a low head, you will have less splash, is that correct?

A. That is certainly one of the things that I understand it to teach, yes.

Q. And you feel that this patent discloses that human knowledge for the first time, do you?

2636 A. I didn't say that. I said in combination with the other things, it is the first time.

Q. In combination with what?

A. With the carefully controlled relatively rapid flow.

2637 Q. I see. How do you get relatively rapid flow from a low hydrostatic head, Mr. Fishleigh?

A. With a larger orifice.

Q. Well, it is fairly obvious if you have a larger orifice, you get more flow or more rapid flow, is it not?

A. Yes, it certainly is today.

Q. Do you think it was obvious to the Romans, Mr. Fishleigh?

A. To the Romans?

Q. Yes.

A. Well, that is going back quite a little ways for me.

Q. I am referring to our previous discussion and the text book that we had that we cited from.

Well, we will pass that question, Mr. Fishleigh.

Now, Mr. Fishleigh, on page 2568 of the transcript, which

was yesterday afternoon's session, at the very bottom, you made the statement:

"I have seen a Mojonnier machine operating in a dairy in one of the Chicago suburbs with an anti-splash nozzle and at the normal low head that the machine oper-
2638 ates with, and even under those conditions, at that particular time I saw it operating, there was a slight foaming problem at the time. Any more foam would have not been tolerated."

Mr. Fishleigh, can you step down to Plaintiff's Exhibit 39 and remove the nozzle that has the slot in the side, please? If you can. I assume it comes off.

A. I don't think the trouble is very great, but we do have a little bit left in this device.

By Mr. McCanna: Meaning a little water left in the tank.

By the Witness:

A. A little water in it, yes. There is not very much.

By Mr. Clement:

Q. May I see the nozzle, please?

A. Yes.

Q. Now it is my understanding that that testimony that you gave yesterday indicates that even with this deflection portion on this nozzle, which is not the type of nozzle that is illustrated in the patent, they were having diffi-
2639 culty with foaming, is that correct, when you saw this Plaintiff's Exhibit 39 operating?

A. There was some foam, yes.

Q. And is it true that any more foam would have not been tolerated?

A. Any substantial increase, such as would have prevailed if we had gone to five or six or twenty foot head.

Q. I believe the portion of the nozzle that I am referring to is marked 44, and it has a slot in the side which directs the milk to the side so that it hits the side of the container and runs down the side of the container, is that correct?

A. That is correct.

Q. And that was illustrated, I think, in one of the prior art patents that we looked at?

A. Yes. I think that was, perhaps, in the Hothersall patent.

Q. That is patent number 2,222,617?

A. Yes.

Q. Do you have that patent?

A. Yes.

Q. Referring to Figures 4 and 5 of that patent, Mr. Fishleigh, in the actual operation of this Hothersall
2640 device, the effective head during the dispensing decreases, does it not, as the container fills up, the container which is being filled?

A. Yes.

Q. So that you have in effect substantially the same effect illustrated on your chart, Plaintiff's Exhibit 125, is that correct?

A. In that case, yes. The—

Q. Just answer the question. It is substantially the same effect, right, the decreasing head such as we have here as the container is filled?

A. If I must answer with yes or no, I will have to answer no.

Q. Well, would you qualify your answer then, since you have changed it? I mean would you say why you have changed it?

A. Yes, because as shown on the chart 125, there is no decreasing head during the filling operation as to each filler.

2641 Q. I was referring to the collective use of all three in the filling operation.

A. That is where I insist that we keep ourselves straight.

Q. I have no disagreement with that.

A. In this instance the effective head does vary. It is higher at the start of the fill than it is at the end of the fill.

Q. So that you would get the same beneficial effect with respect to control of splash effect in the Hothersall patent since the head is decreasing as it fills, is that correct?

A. Yes.

Q. Yet Hothersall shows this side deflecting nozzle, does he not?

A. Yes.

Q. Do you have any opinion as to why he put that side deflecting nozzle in there?

A. Yes.

Q. What would that be?

A. It improves the venting action.

Q. It has nothing to do with splash effect?

A. I didn't say that.

2642 Q. Well, does it relate to control of splash effect?

A. I think that it assists in the splash effect.

Q. Now, Mr. Fishleigh, what would happen if we operated Plaintiff's Exhibit 39 with a nozzle on here of the character as illustrated in the patent, under the conditions you say you observed in the record at page 2569, when you said any more foam would not have been tolerated?

I mean under conditions when they had that nozzle 44 on the machine.

What would have been the result if we had the nozzle of the form illustrated in the patent on the machine?

A. If I may again point out that the nozzle which you took off of the CP machine, I believe that is it, Plaintiff's Exhibit 39, was not the nozzle which I saw in operation.

Q. What nozzle did you see in operation?

A. I have one in my brief case.

Q. Is that the nozzle as illustrated in the patent?

A. No.

Q. What is the difference?

A. Well, the stream as it comes down through the nozzle is divided into two portions and deflected to

2643 some extent toward the side of the carton.

Q. To some extent?

A. Yes, deflected to the side of the carton.

Q. Deflected far enough to reach the side of the carton?

A. Yes, but not as sharply as with the nozzle that we had on the CP machine.

Q. All right. Now let me ask you, if we used the nozzle that is described and illustrated in the patent in place of that last nozzle you just showed me, what would the result have been under the conditions you observed that day?

A. Based on my tests with these test units that we saw yesterday, I think there might have been a very slight increase in the amount of foam.

Q. And you said previously any more foam would have not been tolerated, is that correct?

A. That was the statement I made. I had in mind—

Q. Do you know—

A. I had in mind the differences between the six and eight foot head and the heads that we got here.

Q. Do you know, Mr. Fishleigh, if it is common practice to use this Plaintiff's Exhibit 39 type of filler
2644 with a nozzle of the character illustrated in the patent?

A. Do I know whether it is?

Q. Yes.

A. It is my understanding it is used in some instances.

Q. In some instances?

A. I have never actually seen it so used.

2645 Q. I see, and it is still your contention that the patent structure teaches a method of control of splash effect which is commercially acceptable, is that right?

A. In the sense of the Hothersall control of splash, that is the decreased head, no.

Q. How about in the sense that is in the claims?

A. I think it does.

Q. Well, what do the claims teach with respect to splash control? Don't they just say that it is the result of the construction?

A. That is correct.

Q. And haven't we just indicated that the construction doesn't give you a satisfactory control?

A. No.

Q. Do you know what percentage of machines in the field use the nozzle without the side deflection?

A. No, I do not.

Q. You don't have any idea?

A. Not in percentage.

Q. Roughly?

A. No, I don't have any specific idea.

Q. Do you know if it is less than 25 per cent?

2646 A. I don't know. I would think that—

Q. You have never seen one?

A. (Continuing.) --it is a large portion, but, I don't know anything about it.

Q. You have never seen one without the deflecting nozzle, I believe you said a moment ago?

A. That is correct.

Q. I believe there was some discussion in your testimony about the valve of the patented device, the control valve and the float control valve of the accused machine.

A. Yes.

Q. And I believe we have also had some discussion about what effect there would be if the pressure in the supply line was changed, increased, for example.

By the Court: Pardon me. Will you allow yourself to be interrupted for a moment?

Go ahead. They are not ready.

By Mr. Clement:

Q. I believe—I will ask you again, Mr. Fishleigh,
2647 if we increased the pressure in the intake pipe 27 over what we had been operating under, say, for example, as represented in Figure 3 of the patent and as is shown on our chart, Defendants' Exhibit 47, if we increased the pressure in the pipe, the intake pipe 27, what would happen to the level of the liquid in the float control valve?

A. The level would rise slightly, or would rise, depending on how much that pressure was increased and if it were increased beyond the capacity of the float—

Q. Well, let us assume no increase beyond the capacity, for the moment.

A. O. K. Then, the level would rise; the float in the closed position would be submerged somewhat more.

Q. And why would the level of the liquid rise?

A. Because it would require a greater amount, greater proportion of the volume of the float to be submerged in order to have sufficient pressure acting on the valve to offset the pressure in the tank—or in the tube.

2648 Q. Mr. Fishleigh, I am drawing an arrow on the chart, Defendants' Exhibit 47, within the tube, intake tube 27. Can you see that arrow?

A. Yes.

Q. Is that the force that is exerted by that increased pressure on the valve member 26 which is the disc immediately below the end of the tube 27?

A. Yes.

Q. And you mentioned that—or, I will ask you: Is there a force which is tending to urge the float in a particular direction?

A. Yes. The float is hollow and is buoyed by the liquid level.

Q. I am drawing another arrow Mr. Fishleigh, on this chart, Defendants' Exhibit 47, and I will ask you if that is the force exerted by the float 24 on the valve disc 26?

A. It is the direction of that force, yes.

Q. And you testified a moment ago, as the pressure increases, there would be a greater force exerted on the valve plate or disc 26, by pressure in the pipe 27 as illustrated by the arrow which I will label A, is that correct?

A. That is correct.

2649 Q. And now you said the level of the liquid would increase in the tank 14 under those conditions?

A. That is correct.

Q. And as that level of the liquid increased, would that increase the force that is indicated by the arrow that I have labeled B?

A. Well, that is why it would increase. That is why the level would rise, because the liquid would continue to flow in through the tube until such time as those forces were balanced, or, for that matter, a little more than balanced.

Q. Mr. Fishleigh, I am drawing an arrow on the chart labeled Defendants' Exhibit 46 and I am labeling it A.

I am drawing another arrow on Defendants' Exhibit 46 and labeling it B.

Are those arrows comparable to the force we have just described in connection with chart 47, Defendants' Exhibit 47?

A. Well, I think I could say yes. Of course—

Q. I know there are slight differences, but, for the moment, we will assume that they are comparable to what

2650 we were talking about on that chart, is that correct?

A. I will say they are, with the reservation, as we progress, if it develops that that difference is of any importance, I will back up to it.

Q. Is the effect of the rising of this float, the exertion of the force in the direction of the arrow which I am drawing and labeling C on Defendants' Exhibit 46 in so far as the valve 27 is concerned?

A. Will you repeat that question, please?

(Whereupon the question was read as above recorded.)

A. I think that is correct.

Q. So that then both the force that is increased so far as the fluid coming in the intake pipe is concerned and the force exerted by the rise in head which might occur if the pressure is increased, would tend to close the valve 27, is that correct?

A. That is correct. I would like to just refer to my—

Q. Do you have small copies of these charts or would you like them?

A. I don't think I will get what I am looking for from the—I would like to look into the tank here just a moment, if I may.

2651 Q. Surely.

A. And check my recollection of the connection between both members.

(Witness checks.)

That is correct.

Q. Mr. Fishleigh, will you tell me what effect—well, let us put it this way: Let us suppose that in both devices the increase in pressure has permitted, oh, perhaps a quart of liquid to enter into the dispensing tank and let us assume also that the size of the dispensing tank represented on Defendants' Exhibit—the chart, Exhibit 46, is comparable to the size of the tank on Plaintiff's Exhibit 40, which is the accused machine, and the size of the tank illustrated on Defendants' Exhibit 47 is comparable to the size of the tank in Plaintiff's Exhibits 37 or 39, either one.

Now, if we had an extra quart flowing into the dispensing tank, what would be the effect on the hydrostatic head in the tank as shown on Defendants' Exhibit 47, which is the patented device?

A. Which is 47?

2652 Q. The patented device.

A. One quart would change the hydrostatic head somewhat more in the patented device to that of the size of the P-37 than it would in P-40, because P-40 is a somewhat larger diameter tank.

Q. And the liquid would tend to rise up around the float in this direction that I am indicating here above numeral 39?

A. That is correct.

Q. And over here, it would tend to rise slightly (indicating)?

A. Yes.

Q. At the level I have indicated?

A. That is correct.

Q. Would the rise over here (indicating) be comparable to the rise here where the bulk of the container is taken up by the float?

A. That would be an additional factor, so that one quart would cause a larger rise in the patented showing than it would in the other tank, for that reason, as well as the difference in diameter.

Q. And that would be—

By the Court: Let me interrupt you a moment.

2653 Mr. Clement, how much more time will you take?

By Mr. Clement: I want to finish by noon, your Honor.

By the Court: You will finish at noon?

By Mr. Clement: Yes, your Honor.

By the Court: No use keeping this jury that is coming down.

By Mr. McCanna: I believe I have about three-quarters of an hour.

By the Court: What?

By Mr. McCanna: I believe I have about three-quarters of an hour. I have another witness to put on.

By the Court: Do you have another witness?

By Mr. McCanna: Yes, your Honor.

By the Court: When do you think you will be through?

By Mr. McCanna: I believe it will take about three-quarters of an hour. That ought to cover it. It isn't so very long. It might take an hour.

By the Court: Well—

2654 By Mr. McCanna: And then, I don't know if there will be cross-examination. I believe it will take some—

By the Court: I have to know when so that I can tell this jury when to come back. I will recess at 12:10 today and we will be back at 2:00 o'clock.

Do you think you will take until 12:10?

By Mr. Clement: We will take until 12:00 o'clock

By the Court: Do you think you will take three-quarters of an hour after that?

By Mr. McCanna: Yes, your Honor.

By the Court: You just have one witness?

By Mr. McCanna: One witness.

By the Court: Do you have anything else?

By Mr. McCanna: No, your Honor.

By the Court: Can you tell who that witness is?

By Mr. McCanna: Mr. Mojonnier. We may have one other witness. I would like to ask two questions of Mr. Brasile. I would like to have him here for a short time

2655 to identify two pages.

Will he be here, Mr. Clement?

By Mr. Clement: So far as I know, he intended to be here. I didn't know you wanted him.

By Mr. McCanna: It is merely to identify two papers.

By the Court: You won't get through before 3:00 o'clock?

By Mr. McCanna: I will try to finish by 3:00, your Honor.

By the Court: I want to know. I am going to let the jury go. I don't want to waste their time.

By Mr. McCanna: I believe I can finish, yes.

By the Court: All right.

(Thereupon the Court gave his attention to another matter on the call, after which the following further proceedings were had herein:)

2656 By Mr. Clement:

Q. Mr. Fishleigh, will you refer to the Engels patent briefly, please? That is 2,542,239, the dough and cake batter dispenser.

A. Yes, I have it.

Q. I believe you testified that you did not consider Mr. Deletzke's testimony as being fair and accurate on this patent.

I would like to ask you if you consider your testimony to be fair and accurate, your previous testimony?

A. I haven't read it over, but I would hope that were true. It was certainly the intention, to be sure.

Q. I believe you referred to Figure 1 rather extensively and particularly with respect to the two probes 42 and 44 and the way in which they maintain an amount of material in the tank 10.

Do you recall that?

A. Yes.

Q. Is it not true, Mr. Fishleigh, that Figure 1 is identified as a diagramatic showing?

A. I think that is true. I don't recall. It is a diagramatic showing. Whether it is identified as such, I
2657 don't recall.

Q. Well, it is a diagramatic showing?

A. Yes.

Q. Now will you refer to Figure 2, please, of the Engels patent, and I will ask you if that is an actual drawing as distinguished from a diagramatic showing?

A. Well, I wouldn't know whether it were a scaled drawing.

Q. Well, it certainly is not a diagramatic drawing?

A. No, it certainly is not a diagramatic drawing.

Q. Now referring again to your testimony about those probes which are the substitute for a float valve, I believe —we have all discussed that in connection with the patent in suit—Figure 5 of the patent in suit shows a probe instead of a float valve, is that correct?

A. That is correct.

Q. Do you know if these probes 64 and 66 as illustrated in Figure 2 are adjustable as to their position?

I refer you to column 7, line 30, of the patent specification.

Does that indicate that they are adjustable in their
2658 position, their axial position?

A. Yes.

Q. Now suppose, Mr. Fishleigh, we were using this device to dispense cake batter which is not too viscous a material into—well, let us say cup cake holders, and we had these probes fairly close together in the sense that we have been using here in this suit.

But, suppose also that the volume of a cup cake holder and particularly the volume of dough or batter that you would put into the cup cake, was obviously relatively small.

Could you not run this device for a considerable period of time before it would be stopped, as you indicated it would be stopped for the operation of the valve which lets more batter into the lower tank 50 as it is illustrated in Figure 2?

A. I think the answer is yes. If the volume dispensed at each filling was small enough and the area or the space between the probes large enough, it would vary directly as between the space between the probes and inversely as to the amount needed for each cup cake.

Q. Well, will you please assume the space between
2659 the probes is relatively small; that the amount between each cup cake is obviously, relatively small?

Then the machine would operate for a substantial period if the tank 50 were relatively large, would it not?

A. That is right.

Q. And it would be customary in a bakery to have a machine of this kind for a substantial capacity, would it not?

If they are using automatic machines, they are doing a rather large business, are they not?

A. I can't tell you, sir. I have never seen a machine of this type operate and I don't know for small cup cakes whether it would be customary to have a quite large machine or not.

2660 Q. Would not the pressure that is used as you have described in the tank 10, referring again to the diagrammatic showing of Figure 1—would not that pres-

sure as is used, be dependent upon the viscosity of the materials being dispensed?

Let me ask it another way. If you have a relatively flowable material dispensed such as cake batter, would you use the same amount of air pressure in there as you would use for dough, which is obviously very difficult to move through an orifice?

A. I don't recall that there is anything said in this patent—

Q. Speaking from your general engineering knowledge, Mr. Fishleigh.

A. It would be possible to operate with less air pressure if you had a thin batter or freely flowing liquid than as though you had a thick batter. However, you could operate with a thin batter with the same pressure that you would use for the thick batter.

Q. Would you say that cake batter generally is equally flowable with molasses, just generally?

A. Oh, I think I have seen some cake batter that
2661 was perhaps more freely flowable than some molasses.

I am not sure whether the cakes would be as satisfactory as though they were thicker. I am not sure about that.

Q. Does the patent in suit refer to Figure 5, the showing in Figure 5 of the patent and the dispenser illustrated in there, as being useful for such things as molasses?

A. I think so. Let me—

Q. I refer you to line 4 in column 7.

A. Well, that refers to the structure as the "molasses gate valve."

Whether or not that means they are using molasses in it, I am not prepared to say.

Q. It would be if it was designed to work with fluids comparable to molasses, wouldn't it, Mr. Fishleigh?

A. That is right. That is, this valve could be used. That is no doubt where it got its name. It could be used with molasses.

Q. What elements which are equivalent are not present in the Engels Figure 1, for example, which are present in Figure 5 of the Mojonnier patent?

A. The constant hydrostatic head, and I refer to
2662 that for a difference, a distinct difference, and referring to the probes in Figure 5, the Mojonnier patent says, beginning in column 6—

Q. Just a minute. Just a minute, Mr. Fishleigh. How about the probes in Figure 2 in Engels which are adjustable?

A. Of Engels?

Q. Yes.

A. They may be adjustable, but they are—

Q. Let me ask you, Mr. Fishleigh, are they the equivalent of the probes of Figure 5 of the patent?

A. As probes per se, but not as to their functioning of maintaining a constant head.

Q. Well, that is a very interesting point, Mr. Fishleigh, and I would like to have you explain to me, if you will, what the meaning is of column 6, line 48 of the patent where it explains those probes, that paragraph there.

A. The entire paragraph?

Q. Well, read what portion you need to read to explain the operation described there.

I think you will find the most interesting beginning in line 64.

A. (Reading.) "When the liquid level in the
2663 container 75 goes below a certain preselected level the probe circuit operates to open the valve 83 to permit more liquid to flow into the container 75. When the liquid reaches a preselected lower level the probe circuit operates to close the valve 83."

Q. Stop right there, Mr. Fishleigh.

What is the distinction between that statement and what is shown in Engels? Just this statement.

A. If we stop right there, the showing is very similar, but you have asked me—

Q. What is the next sentence, Mr. Fishleigh?

A. Yes. The next sentence is quite critical.

"For purposes of illustration the probes 77 and 78 are relatively far apart."

Q. All right.

A. (Reading.)

"By preselecting the high and low levels, however, so that they are relatively close it is to be understood that a
relatively constant level can be maintained in the con-
2664 tainer 75 in the same manner as that described for the float valve construction shown in the embodiment in Figures 1 to 4."

With this construction, the teaching is, to maintain a relatively constant, as near constant level as possible, it

can operate satisfactorily that way. When we come to Engels—

Q. Let me ask you a question about Engels.

A. Well, now, you have asked me a question. Can't I finish my answer? You asked me to compare the two. I am not willing to give you the part of the comparison which suits your purpose, and then stop.

2665 Q. Well, you were, I think, tending in that—well, never mind. Go ahead, Mr. Fishleigh.

A. In the Engels device, the device depends upon a length of time, a certain length of time from the top level to the low level, for the operation of the machine.

Q. Mr. Fishleigh, do you think it would be an inventive step not to use pressure in Engels when you had a freely flowing fluid?

A. As of today I think that is true.

Q. You do?

A. There is no teaching, however, in the Engels patent that I know of to eliminate the pressure.

Q. Do you think it would be an inventive step to—

A. Oh, excuse me. You said—

Q. I said, do you think it would be an inventive step not to use pressure in the Engels structure if you had a relatively free flowing fluid that you were dispensing?

A. Today, no.

Q. What do you mean by today?

A. Well, you have just asked me, and as of today, with the knowledge that we have, I would say no.

2666 Q. You think it would have been an inventive step prior to Mr. Mojonnier's patent application or invention, or alleged invention?

A. Yes, I think that was true, yes.

Q. You think it would be an inventive step to connect those probes in such a way that they didn't actually stop the machine at the time the level fell below the probes, so that as explained in the Engels patent, it momentarily stops the machine?

A. I think that there is nothing that would suggest that; that is, that it would not have been an obvious thing to do in the light of the art, and certainly—

Q. Even to one experienced in the art?

A. Certainly Engels didn't suggest nor teach that sort of structure.

Q. I will ask you again if there are any other elements,

or I should say is that the only element that you consider to be not in Engels?

A. Of which claim?

Q. We are talking about Figure 5 of the patent and the Engels disclosure.

A. Oh, between the two.

2667 Q. I think your answer previously was that it was only the hydrostatic head that was different.

While we are on the hydrostatic head momentarily, is that a part of the structure of the device, Mr. Fishleigh, the hydrostatic head?

A. It is not a part of the mechanical features of it. You don't build a hydrostatic head. You so place the other elements that you do obtain a hydrostatic head.

Q. Is the Mojonnier patent a so-called mechanical patent as against a process patent?

A. I think that is correct.

Q. Under the requirements of the patent law, that is supposed to define a particular structure, is that right?

A. Well, you are getting a little bit over my head as to that phase of it.

Q. You know the difference between a mechanical patent and a process patent, don't you?

A. Yes.

Q. Is that the difference primarily?

A. Well, as I understand it—and I don't pretend to be an expert on that particular phase of it—a mechanical patent does define a machine or mechanism, whereas

2668 a process patent indicates certain steps in a process that you do this, and then you do that, and then do the other thing.

2669 Q. Mr. Fishleigh, let's refer to the Zsoldos patent, which I think has been—

By the Court: We will take a very short recess, please.

By Mr. Clement: Yes, sir.

(Whereupon a short recess was taken after which the following further proceedings were then had:)

By the Court: Proceed.

By Mr. Clement:

Q. Mr. Fishleigh, I presume you must have spent a considerable amount of time studying the Zsoldos patent, is that correct?

A. I don't know what you mean by considerable. I studied it.

Q. How much time did you spend studying it, Mr. Fishleigh? Let's move along, if we can.

A. I can't tell you in exact time.

Q. You examined it very carefully, did you not?

A. Reasonably so, yes.

Q. Would you be willing to stake your reputation as a patent expert and an engineer on your discussion yesterday relative to Zsoldos and all the other testimony you have given in this case as being just equally as 2670 accurate?

A. I have to stake it whether I want to or not

Q. You mentioned, I think, that there was merely a casual comment in the patent about the function of the spring, which is shown in Figure 5, spring 86.

I take it from that and your other testimony that you felt that there was no real disclosure of the actual function of that, or at least you did not think that it was disclosed in an operable fashion, is that correct—that and the compensating valve as a whole? The compensating valve as a whole which is the valve 85, and having in conjunction with it the spring 86.

It was my impression from your testimony yesterday that you did not think it was a disclosure of an operable device.

A. Not to regulate or control the flow from the full condition to the empty condition.

Q. And that is your considered opinion, is it?

A. That is correct.

Q. And you are standing on that?

A. That is correct.

Q. Mr. Fishleigh, I have had prepared some photo- 2671 stats, three in number, which are rather rough, but I think they will serve to illustrate the points that I am going to attempt to bring out.

I will hand you these photostats marked 2, 3 and 4. Perhaps we had better mark them for identification as Defendants' Exhibits 77, 78 and 79.

(Whereupon said documents were marked Defendants' Exhibits Nos. 77, 78 and 79, respectively, for identification.)

By Mr. Clement:

Q. Mr. Fishleigh, I will ask you if Figure 1 is characterized in this patent as in the Engels patent, Figure 1 in the Zsoldos patent is characterized as a diagrammatic showing?

A. That is correct.

Q. How is Figure 5 characterized in the patent? I refer you to page 4, column 1, line 40—well, we had better start with line 37.

A. Page 4?

Q. Page 4, first column, line 37.

Is there a statement that:

"means for automatically compensating for the varying hydrostatic pressure and this means is best shown 2672 in Figure 5 of the drawings."

A. That is correct.

Q. Will you examine Figure 5 of the drawings, Mr. Fishleigh?

A. Yes.

Q. Now referring to the three photostats that I have given you, which have been marked for identification Defendants' Exhibits 77, 78 and 79, is the float 83 shown in those three photostats of the same construction as shown in Figure 5 of the patent, substantially, as far as its dimensions are concerned?

A. Will you repeat the question, please?

(Whereupon the question was read as recorded above.)

By the Witness:

A. No.

By Mr. Clement:

Q. Why do you say "No," Mr. Fishleigh?

Let's refer to the chart, Defendants' Exhibit 77 for identification.

A. I had better mark those. I don't have them checked.

2673 Q. Excuse me. Sheet No. 2 is Defendants' Exhibit for identification; sheet 3 is Defendants' Exhibit 78 for identification; and 4 is Defendants' Exhibit 79 for identification.

You said that the float as shown in the chart, Defendants' Exhibit 77, is not substantially the same as that shown in Figure 5 of the patent, is that correct? What are the differences, Mr. Fishleigh?

A. I see nothing in Figure 5 to indicate that the float is as long as shown there.

Q. Would you refer to Figure 5 and the distance between the bottom of the float and the top of the circular tube 13?

I might say, Mr. Fishleigh, that these charts were prepared hurriedly and the dimensions were attempted to be made the same as those appearing in the drawings with respect to the size of this float, with the exception of the diagrammatic showing in Figure 1. The dimensions were attempted to be made the same as would be the dimensions in Figure 5.

A. But superimposed upon the diagrammatic showing of Figure 1?

2674 Q. That is correct.

A. All right.

Q. Now, what is your answer with relation to Figure 5 and the float shown now in the chart, Defendants' Exhibit 77 for identification? I might point out—

A. It looks to me, just as I look at it here, *that the* bottom of the float is closer—that is, as I look at this space between the top of 13 and the bottom of the float on your Exhibit 77, that looks almost square to me.

Q. All right, Mr. Fishleigh. Let me ask you this just to save time.

Where would the bottom of the float be in Figure 1 if it were modified in accordance with the showing in Figure 5?

A. Somewhat above what it is here.

Q. How much, Mr. Fishleigh?

A. Oh, possibly an eighth of an inch on this drawing.

Q. An eighth of an inch, all right, fine. Now, let's look at the patent specification, Mr. Fishleigh, in connection with these photostats.

Beginning on line 42, in column 1 of page 4, now
2675 assuming that we are talking about the type of float that is shown in Figure 5, as you read that paragraph, do you think that these charts 2, 3 and 4, marked Defendants' Exhibits 77, 78 and 79, are a fair representation of the operation described in that section?

A. In these three drawings, you say?

Q. Yes, sir.

A. I don't think these check with anything in the drawings of the patent, certainly not Figure 5, which is the most accurate.

Q. In what way don't they check? That wasn't my question, Mr. Fishleigh. I think my question was, now reading that section of the patent I just referred to and referring to these drawings, do you think these drawings

illustrate what was described in that section of the patent specification?

A. Over a part of the operation, I think they would operate there just as the showing in Figure 1 would operate in part. But these drawings themselves indicate that, to me at least, you couldn't operate even the structure you have shown here in your Exhibits 77, 78 and 79, to control the liquid over the float.

2676 Q. Why not, Mr. Fishleigh?

A. Well, I think the position shown in Exhibit 79 is an inoperative position here, just as it was on my third one.

Q. In what way is it inoperative?

A. The top of the rod is well below the solenoid.

Q. Mr. Fishleigh, is the bobbing of the float that was supposed to be clamped by that solenoid 88 more pronounced when the float is being supported almost entirely by the liquid or when it is hung from the spring, which is identified by the numeral 86 in Figure 5?

A. Oh, I think it probably is more.

Q. Well, isn't it true that that solenoid 88 was put in there merely to control the bobbing which might occur in the device, as shown in Defendants' chart, Exhibit 77, and perhaps 78 also?

A. Resulting from the flow of liquid through the orifice, and I certainly feel that that would be present in a situation such as we have down here toward the bottom.

Q. Is it your position, Mr. Fishleigh, that the mechanism would not operate because the armature at the top of the float 83 goes out of contact with the solenoid

7677 88?

A. I have doubt that it would go back again.

Q. What do you mean by that?

A. Well, I think that you might find that the armature got stuck underneath it just as the float might.

Q. Isn't the float rather closeby confined in the chamber 84 so it doesn't have much side variance?

A. Well, as shown in Figure 5, which is said to be the exact showing, there would be ample room in the float, if the float were at the bottom and against the right-hand side of the chamber 12, so that it wouldn't go back up.

Q. Do you think a recent engineering graduate could figure out how to stop that from catching there, if it did?

A. I think that point well might be true.

Q. You think that is the only point—is that the only point that would make this inoperable, Mr. Fishleigh?

A. No, of course, there is another point about Figure 5 that has puzzled me somewhat. You will note that although there is a break in the—

Q. Are you speaking of the mistake that the
2678 draftsman made in the drawing?

A. Well, I—

Q. It is obvious that there is no break in the wall of the tank 10 comparable to the break in the float 83. But again, do you think any recent engineering graduate couldn't figure that out?

A. I am working on the showing, that is, the extent to which—if Figure 5 purports to show me in detail what Figure 1 doesn't show me, then I certainly can't write into it the correction of the draftsman's mistakes to fit some purpose that I would like to have later.

Now,—

Q. Mr. Fishleigh, do you think that you could build a device, such as is illustrated in Defendants' charts 77, 78 and 79, from a study of this Zsoldos patent, if you understood what the showing in Figure 5 is, which is characterized as the best showing of the float valve 85?

A. I think I could build one like Exhibits 77, 78 and 79—

Q. Thank you, Mr. Fishleigh.

A. (Continuing.) I am not sure that it would operate in accordance with the objects or the desires of Zsoldos.

2679 Q. Do you want to change your opinion as to what the disclosure of Zsoldos is in terms of its teaching?

A. No.

Q. You said yesterday it didn't teach anything that could be operable. In effect, that is what you said.

A. Would you mind showing me where I said that?

Q. I think you said it several times, Mr. Fishleigh, and you also indicated, I think, very definitely, that Mr. Deletzke's testimony must have been entirely erroneous because it wouldn't operate, and I don't believe—

A. As to that last, I would be glad to answer it. I did indicate that because Mr. Deletzke was asked whether the structure shown in these drawings would operate, and he pointed out a position that it would operate from, and I said then and I say now he is absolutely wrong.

Now if you want to modify it, if you put enough skill behind it, perhaps you could modify it to make an operable structure from it. But as shown in the drawings, I stick to what I said.

Q. You said about Mr. Zsoldos:

2680 "His idea was good—"

A. Where are you reading from?

Q. I am reading from page 2574 of the transcript:

"His idea was good. That would fit in. If he had done that and could do that reasonably, he would have had a device, one type of mechanism which would produce the result of an accurately measured or accurate quantity of fluid dispensed each time that the coin was inserted and the cycle gone through."

Now referring back to the previous paragraph, and that is what you were referring back to when you said, "If he had done that," you say, speaking of Zsoldos:

"So what he attempted to do was to provide a control valve, a control member, which would vary in accordance with the hydrostatic head, so that the flow which he would get out through his pipe and nozzle 17 would be the same regardless of the hydrostatic head in tank 10, regardless of whether he was dealing with a full container or

2681 an empty container."

Then I think you said in several places that you did not think that Mr. Zsoldos disclosed an operable device. Do you agree with that, Mr. Fishleigh?

A. Yes.

Q. I believe you also said that Zsoldos had been available since 1927, so it appeared to be obvious that there was a substantial contribution made by Mr. Mojonnier to the art of filling in bringing out his device because Zsoldos had not been used.

When did paper cartons come into common use in the dairy industry, Mr. Fishleigh?

A. I couldn't tell you exactly. I recall the Ex-Cell-O people talking about their machine when I was working with them around—

Q. What date was that?

A. Around 1941 and 1942. But I couldn't tell you when they came into use except as to—

Q. Were they in wide use before the war, before World War II?

A. I don't think you would call it wide use, although I do not know.

2682 Q. Let's refer to the Warren patent, No. 2,515,363, Mr. Fishleigh, and I will ask you again if you think your presentation yesterday with respect to this patent was accurate and fair?

A. I think so.

Q. Did you ever drink carbonated milk, Mr. Fishleigh?

A. No.

Q. Do you feel that it would be necessary to have pressure in the tank 119 above the level of the liquid, as you characterized yesterday, of at least 4 pounds in order to make the mechanism shown in Warren operable for the dispensing of milk?

A. Yes.

Q. You do?

A. Yes.

Q. I see.

Will you refer to the specification, Mr. Fishleigh, of the Warren patent, column 6, line 64, or line 62 or 63.

It says:

"It will be noted that the loading of the spring 123—"

2683 which is the spring in the pressure release valve at the top of chamber 119, the first one immediately above the float member—

"—the loading of the spring 123 is such that it will remain closed to maintain a maximum pressure of about 4 pounds per square inch in the beverage chamber 119, or a pressure at least sufficient to maintain carbonation of the liquid in such chamber."

Now what pressure would that be if you were using milk, Mr. Fishleigh?

A. Well, as I understand that, that is 4 pounds.

Q. You understand that—

A. He is saying that the 4 pounds is the pressure required and if he sets the valve at 4 pounds, that is it. He doesn't suggest that you change it at all.

Q. Oh, he is saying that if you want 4 pounds pressure maximum, you can set the valve, surely. He says that right there.

But he also says, does he not, that the pressure should be in accordance with the amount at least sufficient to maintain the carbonation of the liquid being dispensed?

A. Yes, that is what he says.

2684 Q. Now do you think that a high school student would know enough to adjust that valve so that it wouldn't have any pressure, wouldn't maintain any pres-

sure above the milk, if you were dispensing milk and there was no carbonation, and he had instructions to adjust the valve so it would maintain the carbonation to a pressure only sufficient to maintain the carbonation?

A. I don't understand that to say that he is to adjust the valve. As of today with the teaching of the advantageous functioning of a device without the pressure behind it, I quite agree with you that it is a very simple thing then to change it.

This is one of the patents along with two or three, this one particularly, that I have characterized in some of my discussion—I would say this might well be called the "so near and yet so far" patent.

2685 Q. Let's refer to column 2 of the specification, line 40, Mr. Fishleigh, where it says:

"with the liquid being maintained at a predetermined level in the dispensing tank—"

which would be the tank 119, and that level of course would be maintained by the float 129—

"with the liquid being maintained at a predetermined level in the dispensing tank irrespective of the withdrawal of liquid therefrom, in order that the hydrostatic pressure for the gravity flow of liquid from the dispensing tank to a valve-controlled dispensing outlet, will remain the same, to insure the delivery of a measured quantity of liquid to a cup at each operation of the machine."

Now, what teaching isn't there in that quotation with respect to the control of the hydrostatic head and the constant volume dispensed by the maintenance of a hydrostatic head? Isn't it all there in that paragraph?

A. He teaches there, and suggests that, in the

2686 same way that Mr. Melikian said that when he got his tank up to that point that he had a relatively constant hydrostatic head. He was using a hydrostatic head. This man superimposes a pressure behind it.

Q. Mr. Fishleigh, if you were going to dispense milk in the Warren structure, would you first maintain a pressure of four pounds above the milk, being an engineer?

A. If I were going to use that device without change as shown, I would have no alternative.

Q. Isn't there an adjustment which can be made on the pressure release valve 121? [illegible] that obvious from the drawing, and I refer to Figu[illegible]?

A. Yes, as to the valve 121, but not as to 125.

Q. Couldn't you unscrew valve 125 right off the container without any difficulty?

A. Oh, certainly. If you want to change the device, certainly—if you know that is the thing to do.

Q. May I ask you do pressure release valves of the type shown in the diagram, Figure 10, No. 125, do they
2687 have an adjustment on them to adjust the pressure?

A. Some do. Some don't.

Q. I see. Mr. Fishleigh, have you ever seen dispensing devices in use in commercial or industrial applications in which the amount of fluid dispensed is based on the time period in which a valve is opened automatically?

A. May I have that read back, please?

(Whereupon the question was read as above recorded.)

By the Witness:

A. Yes.

By Mr. Clement:

Q. Do you consider a device of that kind as teaching some of the elements that are involved in this disclosure in the Mojonnier patent?

A. Well, of course, I am talking—my answer had in mind amongst others, at least, the Mojonnier patent.

2688 Q. Mr. Fishleigh, referring now to the Purvis patent, which I think is the first one in the book, just very briefly.

Is it not obvious that this patent does not disclose a complete anticipation of the structure that is in question in this suit?

I will phrase that more simply. The Purvis patent does not disclose the entire structure of the patented device, does it?

A. No.

Q. Is it an anticipation of the structure defined in the portion of Claim 1 of the patent, which portion was added to make Claim 1 allowable? Do you recall what I am speaking of?

We have discussed it at some length already; namely, the limitations that were added to Claim 1 to make it allowable, such as the rod extending through the container interconnecting the solenoid and the valve, the solenoid mounted on the container. I believe those were the two limitations, roughly.

A. Well, that is certainly present here. There is a

valve and a container and a rod going through it to a solenoid, that is correct.

Q. This patent wasn't cited by the Examiner, was 2689 it, Mr. Fishleigh?

A. No.

Q. Neither was the Zsoldos patent, was it?

A. No.

Q. Do you think the Examiner would have considered these very specific limitations that we have just discussed that were put into Claim 1 as making the claim allowable and distinguishing it over the prior art if he had had the Purvis patent in front of him at the time?

A. I don't think I am—

Q. Do you understand the question?

A. I understand the question, but I don't know that I am in position to say what the Examiner might have done.

Q. Would you consider it to have been allowable with those limitations having been added in the light of the showing in the patent?

A. Yes, because in the light of the Purvis patent and the entire batch of 12 that you have here, and the number that were in the file wrapper references, and the 70 some odd others, I still find in my judgment, since you ask me, nothing which would anticipate or which would sug-
2690 gest or teach the showing in Mojonnier.

So as far as I am concerned, the Purvis patent wouldn't have made one bit of difference.

Q. And you are willing to stand on that as much as you were on your analysis of the Zsoldos patent, is that correct?

A. That is correct.

Q. I think you said in the record at page 465, which is one of the very early books, with reference to Claim 1, you said:

"The art and the proceedings were such as to n.., in my judgment, limit it to a specific rod that did actually go through the container."

In other words, referring to Claim 1, you said that you didn't think the language that was added to make that claim allowable apparently said what it said.

A. No, that isn't quite right. I think it said that very definitely, but it is my understanding that as to mechanical elements, that even though a claim says certain things, that there are other things which do not respond in term

to that particular language which have been held to
2691 come under it by way of mechanical equivalents.

I wouldn't say that it didn't mean what it said, but it is not necessarily limited to that specific thing.

Q. Is the dispensing valve on the plaintiff's machine, as illustrated in Plaintiff's Exhibits 37 and 39, for example, both, interchangeable with the dispensing valve on the accused machine, Plaintiff's Exhibit 40?

A. Physically interchangeable?

Q. Yes.

A. I think not.

Q. Would you say the dispensing valve on the accused machine was an exact copy of the valve on the plaintiff's machine?

A. No.

Q. How about the float valve with respect to those questions?

A. No, sir.

Q. How about the tank?

A. I think the tank comes very close. If you mean an exact copy in the sense of dimension—

Q Is it an exact copy?

A. No, not on exact dimension.

2692 Q. It is a cylinder, is that correct?

A. That is correct.

Q. How about the mechanism interconnecting the solenoid and the dispensing valve? Is it an exact copy?

A. No.

Q. It is interchangeable?

A. Physically interchangeable?

Q. Yes.

A. On the commercial machines?

Q. Yes.

A. I think not.

Q. Are any of the previously mentioned parts that I didn't ask you about with respect to the interchangeability, interchangeable?

A. I don't think so. I don't think even the covers are interchangeable because of the differences in the finish, differences in size.

Q. How about the timers; are they exactly alike? Is it an exact copy in the accused machine?

A. I haven't had an opportunity to pry into the detail. I have had no drawings of the detail of the accused timer,

but certainly, from outward appearance, they don't
2693 look to be identical in appearance and physical dimensions.

Q. Mr. Fishleigh, one final thing. Do you have a copy of the reissue patent?

A. Yes.

Q. Let us look at claims 6 and 7, briefly. First of all, let us consider what is defined in the specification as the valve element, in terms of the word "valve", as it is used in claims 6 and 7.

I call your attention to line 41, I believe it is, of column 4, for example, or—do you have that?

A. Yes.

Q. Or column 5, line 42.

A. Well, do you want me to—

Q. What is the number of the element which is referred to as the valve?

A. 46 is the ball valve element.

Q. And what is the element that is referred to as the orifice?

I call your attention to line 42 in column 4. I believe it is called "opening" there.

A. It is called an opening 44 in one end of the nozzle 43.

Q. Is it ever referred to as an orifice in the
2694 specification?

A. I can't—

Q. Well—

A. I don't recall that.

Q. Well, let us not bother checking it.

A. I am willing to take your say-so if you have checked it.

Q. In any event, the openings and the orifice are the same, is that correct?

A. That is correct.

Q. The opening 44 is the orifice and the valve is 46.

Let us turn to claims 6 and 7 and about line 66 of column 11 in claim 6 it says:

"a valve in said bottom outlet operable between an open position in which the fluid flows for delivery"

and so on, and it says later, in about line 7 in column 12:

"and a timer for controlling the operation of said valve,"

and then in line 11 it says:

"said timer controlling said valve to continuously
2695 hold open said valve throughout said time period
* * *"

I believe those are all the references to the valve, is that correct, in claim 6?

A. Well, I—

Q. In any event, to save time, that is talking about the element which we previously identified as 46, is that correct?

A. I think that is what is referred to there, yes.

2696 Q. And that is this element shown in yellow in this chart marked Plaintiff's Exhibit 47, is that correct?

A. That's correct. That is correct.

Q. Is there a mention of the opening 44 in this claim, or the orifice?

A. Yes, it refers to a bottom delivery outlet.

Q. A bottom delivery outlet. Is that the same thing as the opening 44?

A. Oh, I think that is a combination of 43, 44. My interpretation of it is that it has that number 43 having an opening 44.

Q. Is it your opinion that the timer in the accused machine controls said valve, and I am referring to the valve—You haven't got a chart of the accused machine?

It is a comparable element in the accused machine, the element comparable to the element 46 in the patented machine, and that element is 58 or 57, depending on which portion you are referring to?

A. Now it is my opinion what?

Q. Is your opinion that the timer in the accused device controls said valve to continuously hold

2697 open said valve throughout said time period?

A. I think we discussed on cross-examination before the fact that the timer does not directly operate upon the ball valve.

Q. Which—

A. Indirectly—

Q. Which element does the timer control?

A. Well, may I—

Q. (Continuing.) In the valve?

A. May I finish what I was saying?

Q. Surely. I was just trying to save time, Mr. Fishleigh.

A. Answering your last question first,—

Q. The valve element, I am speaking of, any element in relation to the valve itself.

A. Yes. It moves the sleeve and by moving—

Q. What sleeve is that?

A. That is, the timer controls the solenoid. The solenoid—

Q. That is the sleeve 68, the sleeve 68?

A. Well, the orange colored sleeve.

Q. Yes.

A. That is correct.

Q. And does it have an orifice in it?

2698 A. Yes.

Q. And does the timer control the position of the orifice?

A. It controls the position of the—that is, it controls the solenoid and that, in turn, operating through the linkage, controls the position of the sleeve and the orifice and—

Q. Mr. Fishleigh, let us refer to Claim 7 and look for the language in Claim 7 which talks about the same thing we have been talking about in Claim 6.

I think you will find it is first mentioned, the valve is first mentioned, in line 35 in column 12. It says:

"a valve operable to control the flow of fluid * * *"

A. May I ask you, did I understand from your cutting me off that you don't care for an answer to your previous questions? Because, certainly, I wouldn't want this record to indicate that I had completed my answer to that.

If you don't want the answers, it is all right with me.

Q. Mr. Fishleigh, if you think you haven't an-

2699 swered the questions, you are perfectly welcome to answer them. I thought you had answered the questions I had asked.

A. I think I indicate clearly when I am at the end. When I am at the end, I will stop and when you break in in the middle, I believe it should be understood that it is breaking in in the middle.

Q. Would you like to more fully answer the previous questions?

A. No. I am quite willing to leave it that the question has not been answered. If you want me to answer it, why—

Q. Will you answer it, Mr. Fishleigh?

A. Yes, I will be glad to.

The timer controls the solenoid. The solenoid operates through the linkage and moves the sleeve. In the first part of that movement, it also moves or permits the movement of the valve member, and then, by way of reversal of parts, it opens the valve.

Now, your Honor certainly realizes that we get the same effect whether I lower that nozzle to the table or whether I move the table up. It is a strict reversal of parts.

2700 Technically, the solenoid is not connected to the valve member, but the same type of opening, exactly, is obtained.

2701 Q. Referring to claim 7, Mr. Fishleigh, again, line 54, column 12, it says:

"a solenoid for operating said second mentioned valve * * *"

which, I believe you will, on checking, find is referring to the valve, the dispensing valve, rather than the float valve—

"operating means interconnecting said second mentioned valve and said solenoid * * *"

interconnecting, that is—

"interconnecting said second mentioned valve and said solenoid * * *"

I take it your answers are the same with respect to whether that falls within the—or whether the accused structure falls within that language?

A. That is correct. In the one case, the valve member is raised and the sleeve or orifice held stationary and in the other case, after, at least the preliminary movement, the ball valve element is held stationary and the sleeve is lowered to open the valve.

Q. Mr. Fishleigh, do you have the Larsen patent,

2702 patent number 2,164,530 in front of you?

This is my last question, your Honor.

A. Yes.

Q. We briefly discussed the showing of the valve in that patent, particularly Figure 2, and you have said, I believe, that the accused valve is the reversal of the valve that appears in the Mojonnier patent.

By Mr. Clement: This is 2,164,530, your Honor.

By the Court: Yes.

By Mr. Clement: The Larsen patent, Figure 2.

By Mr. Clement:

Q. You have said that the valve in the accused machine is simply the reversal of the valve in the patented device.

What would you say about the relationship between the valve in the accused machine and the valve as shown in

Larsen, taking into account the fact that it is not a compiete showing in Larsen as we discussed before, but I think you said also that it would be obvious to someone skilled in the art what the structure was of that valve in Larsen.

2703 With all that in mind, what would you say about the relationship of the valve in the accused structure and the valve in Larsen?

A. Well, I think they are reversals. In other words, we have got three elements—

Q. Well—

A. And they are all—no two are identical.

Q. Let me ask you, Mr. Fishleigh, is the valve in the accused structure closer to the Larsen valve or closer to the valve in the Mojonnier patent, illustrated in the Mojonnier patent?

A. Oh, I think probably it is closer in some respects to Larsen.

By Mr. Clement: That is all.

By the Witness: Although differing, definitely.

By Mr. Clement: That is all.

By Mr. McCanna: No cross-examination.

(Witness excused.)

By the Court: We will recess at this time until 2:00 o'clock.

By the Marshal: This Honorable Court now stands at recess until 2:00 o'clock this afternoon.

* * * * *

2706 And thereupon the following further proceedings were had herein:—

By the Court: Proceed, gentlemen.

By Mr. Clement: Your Honor, I would like to introduce at this time those three photostatic exhibits that were used this morning, Defendants' Exhibits 77, 78 and 79.

By the Court: They may be received.

(Said documents, so offered and received in evidence, were marked DEFENDANTS' EXHIBITS NOS. 77, 78 and 79, respectively.)

By Mr. Voland: If the Court please, there is a matter I would like to take up at this time.

By the Court: Yes.

By Mr. Voland: I have been reviewing the transcript in this matter, and also have been doing a little digging into the law, and I have come to the conclusion, which I felt at

the time, that the Court's rulings on the admissibility of some of the testimony of Mr. Willette were entirely correct because I think I failed to make it clear at that time that we were trying to establish the reasons assigned
2707 by the customers on whom he called for their refusal to purchase our equipment.

Since then I have been digging into the law somewhat, and I find that in suits for a loss of customers that that sort of testimony is clearly recognized as an exception to the hearsay rule.

I have a few very excellent authorities on that point, which I would like to direct to the Court's attention. My point is merely this--

By the Court: Have you got your evidence?

By Mr. Voland: Yes, sir, I do.

By the Court: What do you want to prove?

By Mr. Voland: I merely want to reopen our case for five minutes.

By the Court: What do you want to prove?

By Mr. Voland: I want to prove that Mr. Willette called on these jobbers in the east after the notices had been sent out to the trade by the plaintiff.

By the Court: Called upon whom, now? You want to name them?

By Mr. Voland: Yes, sir.

By the Court: Name them. Make your offer.

2708 By Mr. Voland: Shall I make an offer of proof at this time?

By the Court: I am going to see if I can get it in for you quickly, if you make it so I can do it.

By Mr. Voland: I offer to prove by this witness, if the Court please, that Mr. Willette had made initial calls during the month of January, 1954 on the following jobbers: Creisi, Ralph Miller, Girton Sales, Lanning, Frank Black, Kaestner, Eastern Dairy Supply, Burton Ford, Valley Sales, Tom Lockerbie, Dairymen's Supply, and Dietrich;

That he received, as he testified the other day, certain initial orders from some of them, and expected to be able to establish jobber relations with most all of them;

That the only one of this group whom he was able to set up as a jobber—

By the Court: He testified to that.

By Mr. Voland: Yes, sir. I am picking it up there. That was Valley Supply, Valley Sales.

By the Court: Make an offer of what you want to prove.

2709 By Mr. Voland: Yes, sir.

I offer to prove that he subsequently called on these same jobbers again—

By the Court: All of them?

By Mr. Voland: Yes, sir.

By the Court: All said the same thing?

2710 By Mr. Voland: All said, to the same effect, that they could not handle the plaintiff's equipment because they had received this notice which the plaintiff had sent to the trade in the months of February and March.

By Mr. McCanna: If your Honor please, it seems to me that—

By the Court: Well, will you admit that if Mr. Willette was called to the stand, he would so testify?

By Mr. McCanna: I don't think I should, your Honor.

By the Court: Well, I think you should, considering the length of time this case has taken.

Bring your witness in.

By Mr. Voland: At this time, your Honor?

By the Court: Yes.

I wasn't asking you to admit the truth of it. I was just asking you to admit that the man would so testify.

By Mr. McCanna: I am sorry. I misunderstood.

2711 By the Court: It was plain enough.

Bring your witness in.

And thereupon the defendants further to maintain the issues in their behalf, offered and adduced the following evidence in surrebuttal.

EDWARD WILLETTE, recalled as a witness on behalf of the defendants, having been previously duly sworn and examined, testified further as follows:

Direct Examination by Mr. Voland.

Q. You were sworn before. Are you the same Edward Willette who testified here the other day?

A. Yes, I am.

Q. Directing your attention, Mr. Willette, to the calls which you testified you made during the month of January and shortly before on certain jobbers, and I will read them, if the Court please—I am referring to Creisi, Ralph Mil-

ler, Girton Sales, Lanning, Frank Black, Kaestner, Eastern Dairy Supply, Burton Ford, Valley Sales, Tom Lockerbie, Dairymen's Supply, and Dietrich.

After these initial contacts that you had made with these jobbers, Mr. Willette, did you have any other
2712 or further contact with any of them?

A. Yes, I did.

Q. What was the nature of that contact?

A. I called on them for the purpose of gathering further orders.

Q. Did you call on them during the months of March, April and May?

A. Yes.

Q. Did you get any orders from any of these jobbers?

A. No—with one exception, Valley Sales, I am sorry.

Q. Did any of these jobbers make any statements to you as to the reason why they could not give you orders?

A. Yes, they did.

Q. What statement did they make?

By the Court: Well, now, if you are proving it don't go at it that way. You can't do it that way. Find out who said what, when, and where, and those present.

By Mr. Voland:

Q. Did Mr. Creisi make any statement to you?

By the Court: You are leading him.

2713 By Mr. Voland:

Q. Did you during the time to which you have referred have a conversation with Mr. Creisi?

A. Yes, I did.

By the Court: You are leading him.

By Mr. Voland: I submit, if the Court please, under these cases, I think I can ask him if these people assigned any reasons.

By the Court: You are pointing out to him and asking him if Tom said this and Harry said this. Ask him who, if anybody, said something. Who, if anybody, said anything.

By Mr. Voland:

Q. Who, if anyone, among these jobbers that you called on assigned any reason or said anything to you about buying your machine?

A. Well, starting out, Creisi made—he showed me the letter from Mojonnier-Dawson.

Q. Just one moment, please. I will interrupt you, Mr. Willette, to hand you two documents which have been marked Defendants' Exhibits 30 and 31, and ask you if either of those is the letter to which you have re-
2714 ferred?

A. The letter is Exhibit 30.

Q. Would you proceed? Is that the letter to which you have just referred?

A. Yes. That is Creisi, Newcastle, Pennsylvania. The same question was asked me by Girton at Bloomsberg, Pennsylvania, and Frank Black.

2715 Q. What question are you referring to?

A. I am referring—they asked me about the letter referring to the patent infringement by Mojonnier-Dawson.

Also Eastern Dairy Supply in Long Island, New York, Burton Ford at Waterbury, Connecticut, Valley Sales, of course, did also; Dietrich did at Syracuse.

By the Court: Did what?

By the Witness: Asked me.

They showed me this letter charging patent infringement by the Mojonnier-Dawson Company and said they were sorry they could not continue to handle our equipment.

By Mr. McCanna: Your Honor, that letter doesn't charge any patent infringement.

By Mr. Voland: Read it to the Court.

By Mr. McCanna: I would be glad to. It doesn't charge any patent infringement.

By the Court: Go ahead, subject to the objection.

By the Witness: Dietrich. Tom Lockerbie did not but Dairymen's Supply in Utica, New York, did.

They all brought the same letter forward when I
2716 would walk in and they asked me the nature—not the nature of the infringement, but they just plain stated that they received this letter. They showed it to me and said that for that reason they did not feel they wanted to be in a position to sell our equipment until such time that this thing had been settled.

By Mr. Voland:

Q. Did each one of those jobbers that you just referred to, show you this letter and make a statement to that effect?

A. As a matter of fact, some of them, as soon as I

walked in the door, they had it on their desk to show me immediately. I didn't have the answers ready and consequently I did not receive any orders from them for that reason.

Q. Did you, during the year 1954, receive any orders from any of these jobbers whom you have named, except Valley Sales?

A. No, sir, I did not.

Q. Do you have an opinion, Mr. Willette, as to how many machines of the U. S. Dairies manufacture you could have sold in your territory from January 1, 1954
2717 through April 30, 1955?

By Mr. McCanna: I object.

By Mr. Voland:

Q. (Continuing.) Had Defendants' Exhibit 30 not gone out to the trade?

By the Court: What?

By Mr. McCanna: I am objecting to this witness giving such an opinion.

By the Court: It may be given, subject to your objection. You can take that up in your brief.

By Mr. Voland:

Q. Do you have such an opinion, Mr. Willette?

A. Yes, I have.

Q. What is that opinion?

A. I feel, at least 100 machines.

By Mr. Voland: That's all. You may cross-examine.

By Mr. McCanna: I am sorry I had to object to it, your Honor.

By the Court: What?

By Mr. McCanna: I am sorry I have to object to that testimony.

By the Court: Well, don't be sorry for anything
2718 you have to do in a lawsuit. Just do it.

Do you object?

By Mr. McCanna: Yes.

By the Court: Well, what is your objection?

By Mr. McCanna: I think the whole thing is hearsay evidence.

By the Court: Well, the objection—the evidence may be received subject to the objection and you may discuss it in your brief.

By Mr. McCanna: I have no cross-examination.

(Witness excused.)

2719 By Mr. McCanna: At this time, I wish to offer in evidence the charts that Mr. Fishleigh has used and prepared in this case.

They are Plaintiff's Exhibits 116-B, C, D and E, that have been marked Plaintiff's Exhibits 117-A and B in connection with the Engels patent, Plaintiff's Exhibits 123, 124, 125, 126, 127, 128 and 129, all of which are charts prepared and used by Mr. Fishleigh.

I am also offering the models that Mr. Fishleigh used in his demonstrations as Plaintiff's Exhibits 118, 119, 120, 121 and 122.

By the Court: They may be received.

By Mr. Clement: No objection.

By the Court: They may be received.

(Thereupon said charts marked PLAINTIFF'S EXHIBITS NOS. 116-B, C, D and E, 117-A and B; models marked PLAINTIFF'S EXHIBITS NOS. 118, 119, 120, 121 and 122; and charts marked PLAINTIFF'S EXHIBITS 123, 124, 125, 126, 127, 128 and 129 were received in evidence.)

2720 By Mr. McCanna: This book, in connection with commercial success, which was marked Plaintiff's Exhibit 68 was to be looked at by the defendants.

I am offering that into evidence. That was early in the trial.

By Mr. Clement: I think we will object to that as being immaterial.

By the Court: What?

By Mr. Clement: I think we will object to that as being immaterial.

By Mr. Voland: I think it is also cumulative, your Honor.

By the Court: Let me see it.

What is it?

By Mr. McCanna: Early in the trial, Mr. Mojonnier testified to all those pages as material supplied from outsiders and received by him in the course of his business, tending to show the reaction of the trade in connection with the Mojonnier invention.

By the Court: Well, it may be received.

(Said document, so offered and received in evidence, was marked PLAINTIFF'S EXHIBIT NO. 68.)

2721 By Mr. McCanna: Your Honor, in the last recent examination of Mr. Mojonnier by Mr. Clement, at page 2276, Mr. Clement called attention to the State

suit on the contract and I believe it is proper to show the names of the parties in that suit. There were two suits. They were both filed on the same day, on July 30, 1953, and I merely want to read into the record the names of plaintiffs and defendants because I think that has some bearing in this.

As I said at the outset of this case in my opening statement, we merely want to identify that there is such a thing. We have never at any time tried to bring anything further in about it.

The first case was filed in the morning of July 30, 1953 by U. S. Carton Forming Corp., U. S. Filler Equipment, Inc. and Preformed Carton Corp., against Mojonnier-Dawson Company and this was in reference to the contract dated December 29, 1951, which is here in evidence. That case is No. 53-S-12115.

2722 The second suit was filed in the afternoon of that same day by Mojonnier-Dawson Company against Preformed Carton Corporation, U. S. Filler Equipment, Inc. and U. S. Carton Forming Corp. This is case No. 53-S-12156.

By Mr. Voland: Weren't there additional defendants in that second case, Mr. McCanna?

By Mr. McCanna: I have a copy of the amended complaint.

By Mr. Voland: I am referring to the original complaint. You are talking about the one that was filed July 30th.

By Mr. McCanna: Yes. I believe that Mr. Brasile and Mr. Blum were individual defendants and were later dismissed from the case, is that correct?

By Mr. Voland: That is correct, yes.

2723 The original case, however, was—that is, the original complaint was signed by Maurice J. Brasile as secretary of Preformed Carton Corp. and also as president of U. S. Carton Forming Corp. and Eugene Blum signed as secretary of U. S. Filler Equipment, Inc.

By Mr. Voland: Will you state what court that second suit was filed in?

By Mr. McCanna: These were both filed in the Superior Court of Cook County in the State of Illinois.

I would like to call Mr. Brasile to the stand for just a few minutes.

MAURICE J. BRASILE, one of the Defendants herein, having been previously sworn and examined, was called as a witness at the instance of the Plaintiff, and testified further as follows:

Direct Examination by Mr. McCanna.

Q. I hand you a letter marked for identification Plaintiff's Exhibit 30 and ask whether it is on the letterhead of U. S. Carton Forming Corp. dated March 10, 1953
2724 and ask whether you can identify that?

A. Yes, I can.

Q. The signer of that letter, Guy P. Kirkwright, was employed by U. S. Carton Forming Corp.?

A That is correct.

Q. And here is a second letter. I believe it is identical with the first letter. The first letter was addressed to Ralph R. Miller & Sons of Canonsburg, Pennsylvania and the second letter is marked for identification Plaintiff's Exhibit 31 and is addressed to Brooks Supply Company, Joplin, Missouri. I believe they are identical letters.

Can you identify the second one?

By Mr. Clement: Are those exhibit numbers in this case?

By Mr. McCanna: I have had them marked for identification, to save time here.

By Mr. Clement: Don't we already have those two numbers on different exhibits? We have different exhibits for Plaintiff's Exhibits 30 and 31.

By the Witness: It is 130 and 131.

By Mr. McCanna: 131.

By Mr. Clement: Thank you.

2725 By Mr. McCanna: They are 131 and 130.

By the Witness: Yes, they are both the same. This is a photostatic copy of the original.

By Mr. McCanna:

Q. And they both were sent out from U. S. Carton?

A. That is correct.

Q. To the addressees shown on there?

A. That is correct.

Q. Now this letter marked Plaintiff's Exhibit 130 reads:

"This letter is to inform you of the recent action of the

U. S. Department of Public Health in regards to the approval of our CP and DP Electromatic milk filling machine. The operation of the machine has now been fully approved and it will receive a U. S. P. H. S. approval number in the very near future.

"Mr. Peckham of the Chicago office of U. S. Public Health has told us that he will send letters to all state health departments informing them of the recent action taken by this office.

2726 "We hope that this information will simplify any complications that you may have had due to this delay."

Was that your understanding at that time?

A. That is correct.

By Mr. McCanna: I offer these exhibits into evidence.

By the Court: Any objection?

By Mr. Voland: May we see it, please?

No objection to No. 130.

By Mr. Clement: No objection to 131.

By the Court: They may be received.

(Said documents, so offered and received in evidence, were marked, respectively, PLAINTIFF'S EXHIBITS NOS. 130 and 131.)

2727 By Mr. Clement: What are the dates of those letters, Mr. McCanna?

By Mr. McCanna: March 10, 1953.

By Mr. Clement: Both of them?

By Mr. McCanna: Both.

By Mr. Clement: Thank you.

By Mr. McCanna:

Q. I hand you a group of sheets on the heading of U. S. Carton Forming Corp. entitled "Credit Memos for defective cartons," and bearing the name Ralph R. Miller and marked Plaintiff's Exhibits 132-A to F for identification and all bearing the date June 1, 1953, and ask whether you can identify those.

By the Court: What does this prove? What does this tend to prove?

By Mr. McCanna: Your Honor, in the defendants' case they have been continually talking about the cartons, the leakers and defective cartons as being a cause for something connected with the plaintiff's CP machine and I want to show that these defective cartons arose in the defendants' own place of business and that they had to give

credit for them, and, the fact that they did so exist
2728 in their own business.

By the Witness: The damage to these cartons weren't made on June 1, 1953.

By Mr. McCanna:

Q. I did not ask you that. I just wanted to know whether you can identify these papers.

A. Sure. We gave credit to these various companies, that's right.

Q. Yes. Now, who supplied these cartons to Ralph R. Miller & Sons?

A. U. S. Carton Forming Corporation.

Q. And what was the reason for giving the credit memos?

A. What was the reason?

Q. Yes.

A. Well, if you let me have them back, I can give you the reasons for it.

Kane Dairy, Kane, Pennsylvania—we shipped those on February of 1953 when we first opened our plant, the U. S. Carton Forming Corporation, when we first went into production.

We were sold far in advance on orders, so that we rushed getting these cartons out. We didn't season them long enough, and the same goes for Brown's dair- of
2729 Pennsylvania, Moore Milk Company of Mea- dle, Pennsylvania, Sylvester Dairy of Newcastle, Pennsylvania, Ebenezer Farm of Wheeling, West Virginia, and Linger Light Dairy of Newcastle, Pennsylvania.

It shows our own mistake as bottle makers and we were glad to give them credit. It didn't happen again.

By Mr. McCanna: I offer these in evidence as Plaintiff's Exhibits 132-A to F, respectively.

By Mr. Voland: No objection.

By the Court: They may be received.

(Said documents, so offered and received in evidence, were marked, respectively, PLAINTIFF'S EXHIBITS NOS. 132-A to F, both inclusive.)

By Mr. McCanna: That is all.

(Witness excused.)

By Mr. McCanna: Mr. Mojonnier, please.

2730 ALBERT B. MOJONNIER, called as a witness on behalf of the Plaintiff, in rebuttal, having been previously sworn and examined, testified further as follows:

Direct Examination by Mr. McCanna.

Q. Mr. Mojonnier, do you recall whether the contract of December 29, 1951 between Mojonnier-Dawson Company, Mr. Polivka and Mr. Brasile had any mention of obtaining the approval on CP fillers by the U. S. Public Health Service?

A. Yes, it did. It provided for cooperation of the parties in obtaining such approval.

Q. Now in connection with approvals of your fillers were your fillers for American Can cartons ever formally approved by the U. S. Public Health Service?

A. Yes, they were, by formal letter of approval No. 45 covering models CA and DA, issued by the U. S. Public Health Service on May 27, 1952.

Q. I hand you a letter dated May 27, 1952 on the stationery of Federal Security Agency, Public Health Service, Washington, D. C., and marked Plaintiff's Exhibit 132 for identification, and ask whether that is the letter you refer to?

2731 A. Yes, it is. This is the formal letter of approval No. 45.

Q. Will you please read that letter?

A. It is dated May 27, 1952. It is signed by John D. Faulkner, Chief, Milk and Food Branch, Division of Sanitation.

It is entitled: "Letter of Equipment Compliance No. 45."

The title at the top says it is through the Regional Medical Director, Public Health Service, Chicago, Illinois.

The letter reads:

"We have been advised by our Chicago Regional Office that they have examined the Mojonnier-Dawson paper bottling machines manufactured by Mojonnier-Dawson Company, 9151 W. Fullerton Avenue, Franklin Park, Illinois, and have found Models CA and DA beginning with serial number 130 to be in compliance with the sanitary construction standards set forth in items 10p, 18p and 20p, Section 7 Milk Ordinance and Code recommended by the

Public Health Service (Public Health Bulletin No. 220).

2732 "Interested Health Departments will be informed that the above referred paper bottling machines may be accepted for use in areas operating under the provisions of Public Health Bulletin No. 220."

2733 By Mr. Clement: Your Honor, I don't see the materiality of this letter. I don't see that we need to clutter the record with it.

By Mr. McCanna: Well, the defendants here have been talking right along about plaintiff's machines not being—

By Mr. Clement: This is the American Can filler, is it not?

By Mr. McCanna: That is a step. I am connecting this up with the CP filler, your Honor. It is the actual course in which these approvals—

By the Court: Offer the letter and let's get it in the record. Then you can talk about it. Get the letter offered.

By Mr. McCanna: The letter had a far-reaching effect, your Honor.

By the Court: I am suggesting to you to offer it.

By Mr. McCanna: I offer this letter in evidence.

By the Court: Any objection? Any further objection?

2734 By Mr. Voland: I think it is immaterial.

By Mr. Clement: No further objection.

By the Court: Objection overruled. It may be received.

(Said document, so offered and received in evidence, was marked PLAINTIFF'S EXHIBIT NO. 133.)

By Mr. McCanna:

Q. Now, Mr. Mojonnier, were your Model CP fillers for Pure-Pak cartons ever approved by the U. S. Public Health Service?

A. Yes, they were.

By the Court: Is there a letter to that effect?

By Mr. McCanna: Yes.

By the Court: Produce it. Offer it.

By Mr. McCanna:

Q. I hand you—

By the Court: Is that the letter? Offer it.

By Mr. McCanna: There is a connection that I believe the witness—or I would like to have the witness tell about.

2735 By the Court: Let him tell about it, but don't have him read the letter.

By Mr. McCanna:

Q. I hand you a letter marked Plaintiff's Exhibit 134 for identification, and ask whether you will please explain the connection of this letter to the preceding one that we have talked about.

A. Conditional approval of the Model CP machine was given February 21, 1952, with the understanding that certain minor details would be worked on following that.

In or about February 1953, formal approval was given to the Model CP machine. By that time, because of the change in administration at Washington, the practice of writing formal letters of approval had been discontinued.

Shortly before April 30, I asked for a letter from the U. S. Public Health Service, stating that the machine had been approved, so that I would have something to show the trade. This letter dated April 30 is the reply to my letter, stating that boards of health who write to the U. S. Public Service will be advised of the compliance of this equipment.

2736 By Mr. McCanna: I offer that letter in evidence.

By the Court: It may be received.

(Said document, so offered and received in evidence, was marked PLAINTIFF'S EXHIBIT NO. 134.)

By Mr. McCanna:

Q. I hand you a letter marked Defendants' Exhibit 50, dated February 11, 1954, from U. S. Dairies Sales Corp. to Mojonnier-Dawson Company, and ask whether you received that letter?

A. Yes, I did.

Q. Prior to February 11, 1954, did you or Mojonnier-Dawson Company circulate or cause to be circulated in the dairy trade any charges that the MJ semi-automatic milk filler infringes your patent rights?

By Mr. Voland: I object to the question as leading and suggestive; calls for a conclusion.

By Mr. McCanna: I am merely asking him—

By the Court: What is this letter? What are you asking him, whether or not—

By Mr. McCanna: I am asking whether he—

2737 By the Court: Whether he or his company had been circulating or caused to be circulated the rumors referred to here?

By Mr. McCanna: Yes.
By the Court: Well, he may answer that.

By the Witness:
A. No.

2738 By Mr. McCanna:

Q. Did you or anyone from your company call on jobbers, distributors and customers of U. S. Dairies Sales Company and threaten them with suit for patent infringement if they should deal in or purchase equipment from U. S. Dairies?
A. We did not.
Q. To your knowledge, did anyone from Mojonnier-Dawson Company make any such calls or threats?
A. Neither I nor anyone from Mojonnier-Dawson Company to my knowledge made any such calls or threats.
Q. Now on page 2316 and following of the transcript, you were questioned concerning entries in the books of Mojonnier-Dawson Company regarding the filler delivered by them to Bowman Dairy Company.
Do you have any further records in connection with those entries?
A. Yes, I have the complete records in connection with those entries.
Q. Can you identify these records marked for identification Plaintiff's Exhibit 135, 136, 137 and 138?
A. Yes, I can.
Q. What are they, briefly?
2739 A. The sheet marked Plaintiff's Exhibit 135 is the middle page of our material summary sheet. I have seen the first and third pages in evidence.
The sheet marked Plaintiff's Exhibit 136 is the page from our sales ledger for Bowman Dairy Company for the years 1946, 1947, 1948 and 1949.
The sheet marked Plaintiff's Exhibit 138 is a sheet from our cash book for May, 1948.
The exhibit marked Plaintiff's Exhibit 137 is our sales journal for the period from June 4, 1947 to April 30, 1948.
These records were involved in a safe robbery, to which I have previously testified, and were soaked in water in the Addison Creek and have been recovered and dried out.
Q. Was there a date that you mentioned on which there might be some mistake?

A. Number? The first one I mentioned is marked 135, the second one, 138, next one, 136, and the book is 137.

Q. It is the year date on the cash receipts.

A. May, 1948.

Q. Now I believe you have given some testimony in this case in connection with these exhibits marked Defendants' Exhibits 21, 22, 65-A, 65-B and 65-C.

2740 Will you please tell us more in detail about the entries in connection with the Bowman machine, if you will?

A. The three sheets marked Defendants' Exhibits 21 and 22 and Plaintiff's Exhibit 135, respectively, are a set of sheets from our material summary book where we list all our material and divide it up by accounts.

An entry appears under Account No. 520, headed in ink, "Syruper" and marked over in pencil "Electromatic," on line 5 of page 1-C, under date of March 31, 1948, showing that during the month of March for that account we purchased material in the amount of $13.35.

That is the material that was purchased from the outside for the use in making the first Electromatic filler which went to the Bowman Dairy Company.

The sheet marked Plaintiff's Exhibit 136 is a sheet from the sales ledger of the Mojonnier-Dawson Company, entitled "Bowman Dairy Company, 140 West Ontario Street, Chicago, Illinois," and shows an entry marked with a rubber stamp April 12, 1948, entitled "Filler, Invoice 3385, $385."

2741 The sheets marked Defendants' Exhibit 65-A, -B and -C, are a set of sheets from our sales summary book in which, at the end of each month, we summarize the sales for the month.

It shows a series of entries on line 4 for the month of April, 1948, referring to totals on page 55 of our sales journal, and marked S-55 to indicate that, showing total sales for the month of $20,931.62, and dividing these sales up by products.

2742 Under Account No. 420, marked in ink "syruper" and marked over in pencil "Electromatic," shows the entry of the first sale of an Electromatic filler, $385.00.

The book marked Plaintiff's Exhibit 137 for identification begins, well, first it was called to my attention in a deposition that there are some pages cut out of the back of this book.

I point out that those leaves cut out were used to paste

in to get extra sheets in the front of the book, and the number of those sheets appear on pieces pasted in. This book as far as the number of pages is concerned is in the same shape as it was when we started making entries in it.

It starts on June 4, 1947, has numerous columns, one of which is number 420, headed Syruper. That column is empty through the entire book until we reach the date of April 12, 1948, when there is an entry for the Bowman Dairy Company, invoice 2285, to Account No. 420, in the sum of $385.00.

The sheet marked Plaintiff's Exhibit 138 is a leaf from our cash book for the month of May 1948, and on page CR114, line 21, is an entry marked Bowman Dairy
2743 Company, showing payment of invoice 2285, on May 6, 1948, in the sum of $385.00.

Q. And are all those records the regular records that are kept in the ordinary course of your business?

A. Those are records kept in the ordinary course of business. They are books of original entry.

By Mr. McCanna: I offer in evidence these sheets marked as Plaintiff's Exhibits 135, 136, 137, and 138.

By Mr. Clement: No objection.

By the Court: They may be received.

(Said documents, so offered and received in evidence, were marked PLAINTIFF'S EXHIBITS NOS. 135, 136, 137 and 138.)

By Mr. McCanna:

Q. Now, Mr. Mojonnier, on page 2345 of the transcript, Mr. Brasile was asked by Mr. Clement:

"Q. What type of float valve did the original machine that you sold under the contract have?"

Mr. Brasile answered:

"A. Well, I think it is the same thing they have in here."

2744 He was then asked:

"Q. Did you have any difficulty with that?"

His answer was:

"A. Well, in various operations in plants, well, you see, we were selling small dairymen that was using that pasteurization and most of their coolers were set off the floor. They weren't raised high off the floor, where it would be gravity fed. Most of these dairies had a little centrifugal pump to pump their milk either from the vats or from these coolers that were set off the floor and they

would require you to get an accurate fill. We had to put a surge tank ahead of the filler."

Is that a correct statement of the conditions in the dairy trade?

A. I do not believe that statement is correct.

2745 Q. Will you please tell us what the conditions are with reference to these feed pumps and surge tanks?

A. It is very true that small dairies are more and more adopting the more modern type of pasteurizing system, known in the trade as the short time high temperature system. This has been in use in large dairies for some time, and is the main reason why our bottle of milk today keeps longer than it did years ago.

It is also true that the short time high temperature pasteurizing system has a pump, but it is completely untrue that that pump feeds the filler directly.

The typical short time system consists of a pump, a heater, a holder, a cooler, and a balance tank. Milk is pumped from the source of supply through a small tank called a surge tank, from which it is sucked by a positive displacement single speed pump. The commonly used pump is the Waukesha pump or the Bump pump. These are set and sealed at a constant speed by local health authorities.

They are capable of producing very high pressures, as high as 2,000 pounds per square inch. They normally

2746 do not produce over 40 to 50 pounds per square inch in pasteurizing systems.

Milk is pumped at a constant rate through a heating section, where it is heated to 161 degrees Fahrenheit. It is then pumped through a short holding section where it is held for 15 seconds at 161 degrees Fahrenheit. At the end of this holding—

Q. May I interrupt again and ask whether you could illustrate that by a diagram?

A. Yes, I have a diagram which I made to illustrate this, which I see you have marked Plaintiff's Exhibit 139.

By Mr. McCanna: Maybe we can save some time if the Court will follow this.

By the Court: Are you offering it?

By Mr. McCanna: I will offer it in evidence.

By Mr. Clement: No objection.

By the Court: It may be received.

(Said document, so offered and received in evidence, was marked PLAINTIFF'S EXHIBIT NO. 139.)

By the Court: I am following. Let him go ahead.

By Mr. McCanna:

2747 Q. Will you proceed?

A. At the end of the holding section is a unit which is the heart of the system, called the flow diverse valve. This by-passes milk back to the surge tank unless it has actually reached 161 degrees Fahrenheit, and therefore insures proper pasteurization.

From the end of the holding section, the milk continues through a cooling section, where it is cooled back to about 35 degrees Fahrenheit.

Now it is utterly impossible to connect the line from the cooling section directly to any filler. To do so would cause the pump to build up a terrific pressure and would probably seriously damage the pasteurizing system.

It is also necessary that the pasteurizing system be operated continuously because its accuracy and its complete pasteurization depend to an extent upon it being run continuously. That is, if it is shut down, there is a period of time where it has to divert the milk back until it gets to operating uniformly again.

It is equally true that the filler cannot always run continuously. Therefore, a balance tank is always inter-
2748 posed to provide for the possibility of stopping the filler without stopping the pasteurizing system.

It is my personal observation that these tanks vary in height from about 12 inches to 18 inches in the large majority of the cases, and hold from 20 to 50 gallons. They are normally installed at heights of not over 8 feet from the filler.

I therefore have designed the float valve for the filler to work satisfactorily under these conditions. It works very excellently under these conditions because the ratio of area of the float at its equator to the area of the float valve is, approximately, 62 to 1.

2749 A variation in height of liquid in the balance tank, therefore, of one foot will cause a variation in the level held by the float valve of 1/62 of a foot or a little over 3/16 inch.

Said another way, it would require 62 inches of variation in a balance tank to cause one inch variation in the level held by the float.

Now it is true that there are a small number of dairies which, because of plant limitation, are unable to put their balance tanks up high, or that have old pasteurizing sys-

tems where the milk is discharged close to the floor. In those cases it is common practice to pump the milk to the filler.

I have personal knowledge of many Mojonnier-Dawson fillers which are fed by pumps. It is necessary only to select the proper pump. The L. C. Thompson Company of Kenosha, Wisconsin, has a standard line of pumps designed especially to feed Mojonnier-Dawson fillers.

Earlier in this case we heard Mr. Lee Campbell of the Sunrise Dairy at Algona Indiana, testify that he had used the Mojonnier-Dawson filler since 1950. Mr. Camp-
2750 bell has a plant limitation which prevents him from having his balance tank high. He has been pumping milk to that filler successfully since 1950, using a small centrifugal pump. Photographs showing his plant, showing that pump hookup, have been published.

Q. Mr. Mojonnier, in dairy plants of this kind, is the balance tank open to atmospheric pressure?

A. Yes, it is.

Q. And does the milk flow by gravity from the balance tank to the filler?

A. Yes, sir, it does.

Q. Have you ever checked the accuracy of fill of the Mojonnier-Dawson filler under actual operating conditions in dairies?

A. Yes, sir, I have.

Q. And what were your findings?

A. I have tested Mojonnier-Dawson fillers filling milk cartons in dairies, and have found a maximum variation when filling quarts to be plus or minus one-eighth ounce.

I further have seen reports of similar tests made under similar conditions by the American Can laboratory division, and they show a maximum variation when filling
2751 quarts of plus or minus one-eighth ounce.

I have found that the variation in filling other sizes of containers is in the same percentage.

I have seen production figures from the Dow Chemical Company, which show that on a 400 gram fill of methyl bromide, the Mojonnier-Dawson filler shows a maximum variation of plus or minus 5 grams. The same figure shows that the variation on previously used, unsatisfactory, slow hand methods was plus or minus 10 grams.

I have seen daily report sheets from the Colgate-Palmolive Company at Jeffersonville, Indiana, which show that on the two Mojonnier-Dawson Electromatic fillers installed

there for filling shaving cream the maximum variation throughout the day on a 190 gram fill was plus or minus 2 grams.

I have also—

2752 By Mr. Voland: I move that this be stricken. These reports are hearsay. They are not binding upon us. We can't cross-examine on this.

By Mr. McCanna: I am asking as to his personal experience. He has called at places and has seen the installations.

By the Witness: I have seen these machines operate also.

By Mr. Voland: He said that at first, but since then he has been reading reports.

By the Court: I understand what he has been doing. You are putting in hearsay. He can tell what he knows of his own knowledge, what he has seen.

By Mr. McCanna:

Q. Could you explain anything further from your own knowledge?

A. I know of my own knowledge and personal observation that over long periods of time the Mojonnier-Dawson fillers at the Dow Chemical Company on a 400 gram fill show an accuracy of plus or minus 5 grams; and that the Mojonnier-Dawson filler at the Colgate-Palmolive Company, filling 190 grams of shaving cream in the cans,

2753 show a maximum variation of plus or minus 2 grams. I know that of my personal observation.

Q. Now did the contract of December 29, 1951 provide for service to be done on the model CP filler, and if so, by whom?

A. That contract provided that all installation and service was to be handled by the purchasers, Brasile and Polivka, or by the corporation, Preformed Carton Corporation, which they were to form.

Q. Will you tell us, briefly, what are the causes of top leaker on preformed Pure-Pak cartons?

A. We have a compilation of some 125 possible causes of top leakers on Pure-Pak cartons. They vary from the quality of the original board to the way the carton is handled in the super-market.

The important ones are the folding and gluing of the carton blank; the method of storing the carton blank prior to preforming; the method of handling or running the pre-

formed machine; and the method of running the stapling unit on the filler.

There are many others, but those are the important ones.

Q. Now could the operation of filling a paper car-
2754 ton on a CP filling machine in any way cause a carton to leak?

A. There is no way whatever that the filling operation on a Model CP filler, or for that matter on any of our other fillers, could have any relation whatever to top leakers.

2755 Q. Mr. Mojonnier, are all of your jobbers free to purchase paper carton fillers manufactured by companies other than your own?

A. Yes, they are. We have at no time ever had any contract, agreement or understanding with any jobber that would prevent him from doing business with anyone else selling or manufacturing filling machines, and we have no such agreements now.

Q. At any time has the Mojonnier-Dawson Company had any contract, agreement or understanding with any jobber or jobbers which would prevent them from doing business with U. S. Dairies in the sale of fillers for paper milk cartons?

A. No, sir.

Q. There is another item I would like to ask you about. On page 2285 of the transcript, you were asked about a letter you wrote to Julius Zinn on August 28, 1946. This letter is in evidence here as Defendants' Exhibit 62.

At the time of your deposition in this case, in December, 1954, in response to a subpoena asking for your correspondence with Mr. Zinn, did you produce a copy of this letter?

2756 A. No, I did not.

Q. Why not?

A. Because I had no copy. I did not know about the letter at that time. I had no memory of it.

Q. When did you first learn of this letter?

A. I first learned of this at the deposition taken of Mr. Zinn in January, 1955, at which time he produced this letter.

Q. And that letter was introduced in the deposition of Mr. Zinn in this case?

A. Yes, it was. I made a photostat of it, which I have in my file now. I had completely forgotten about this letter. It was evidently not considered of importance when

we destroyed our 1946 general correspondence files in the normal course of business in 1952.

By Mr. McCanna: Your Honor, do I get some time for what was taken up on the defendants' examination here today?

By the Court: I told you I wanted you to get through. Your estimate of the amount of time you are going to take hasn't been accurate, and the results have tied up a lot of other people, but I want you to get through. Go ahead
2757 and get through.

By Mr. McCanna: I believe that will close our case.

I will make a general offer of the exhibits that I have identified here.

By the Court: Here is one.

By Mr. McCanna: I offer in evidence this sketch made by the witness, as Plaintiff's Exhibit 139.

By the Court: It may be received.

(Said document, so offered and received in evidence, was marked PLAINTIFF'S EXHIBIT NO. 139.)

By the Court: You are reoffering everything you have heretofore identified, is that it?

By Mr. McCanna: Yes.

By the Court: Any objection not heretofore voiced?

By Mr. Clement: No objection.

By the Court: They may be received.

By Mr. Clement: I have one question of Mr. Mojonnier.

2758 *Cross-Examination by Mr. Clement.*

Q. How many or what percentage of the fillers sold under the contract that we have been discussing here, the contract between Mojonnier-Dawson and Mr. Brasile and Mr. Polivka, were sold to dairies with the type of installation illustrated in this sketch which you just presented, Plaintiff's Exhibit 139?

A. I have no knowledge of that.

Q. You have no knowledge?

A. No.

Q. Do you have an estimate?

A. They made those installations.

Q. Did you have an estimate?

A. No, I have no estimate. I can give you an estimate on today's installations.

Q. I understand, but I mean this period of the contract.

A. No, I have no estimate.

Q. Was it a common thing?

A. A short time high temperature system, you mean?

Q. The type you have illustrated in Plaintiff's Exhibit 139.

A. Yes. That is becoming more and more common.

2759 Q. No, was it common in the small dairy at the time of the contract, Mr. Mojonnier?

A. Oh, yes.

Q. It was?

A. Yes. I have already testified that Mr. Lee Campbell put one in in 1950 and had that system.

Q. I understand. I am speaking of terms of percentages in the small dairies to whom these fillers would be sold.

A. I have no figures that would enable me to make an accurate estimate.

By Mr. Clement: That is all.

(Witness excused.)

2760 By Mr. Voland: I have just one document I would like to offer, and I think we can cover it by stipulation.

By the Court: Yes.

By Mr. Voland: I show you a document, which I would like to mark as Defendants' Exhibit 80 for identification, which is a license agreement between Maurice J. Brasile and Milk Container Equipment Corporation, dated September 7.

I have a carbon copy of the original, which I would like to substitute in lieu of the original which you are examining, subject to comparison by you.

I would like too have you stipulate that that contract was entered into on or about the date it bears, and that pursuant to that contract the royalties referred to in the testimony of Mr. Shaw have been accrued in favor of Mr. Brasile.

By Mr. McCanna: I don't see why I should be stipulating all these things, your Honor. I don't know anything about this contract. It has just been handed to me.

By the Court: What is it?

2761 By Mr. Voland: It is the license agreement between Mr. Brasile and Milk Container Equipment Corporation, under which the accused device has been manufac-

tured, and pursuant to which royalties have been accrued to Mr. Brasile.

I think it is pertinent to both the plaintiff's and defendants' case here, and I thought perhaps we could get it in by stipulation.

By Mr. McCanna: It could have been produced a long time ago if they thought it was pertinent. We have been here quite a long while.

By the Court: Well, call Mr. Brasile and he can identify it.

By Mr. Voland: Yes.

Mr. Brasile, will you take the stand, please?

By the Court: Does the plaintiff rest?

By Mr. McCanna: Plaintiff rests, your Honor.

Thereupon the plaintiff rested its case in rebuttal.

2762 MAURICE J. BRASILE, one of the Defendants herein, called on his own behalf, having been previously sworn and examined, testified further as follows:

Direct Examination by Mr. Voland.

Q. You are the same Maurice J. Brasile who has testified here before?

A. I am.

Q. Mr. Shaw in his testimony referred to royalties payable by Milk Container Equipment Corporation.

To whom, if you know, are those royalties payable, Mr. Brasile?

A. Myself.

Q. Is that pursuant to some contract?

A. License contract agreement.

By Mr. Voland: Will the reporter please mark this document, consisting of three pages, purporting to be a license agreement, dated September 7, 1953, between Maurice J. Brasile and Milk Container Equipment Corporation, as Defendants' Exhibit No. 80 for identification?

2763 By Mr. Voland:

Q. I show you Defendants' Exhibit 80 for identification, Mr. Brasile, and ask you if that is the agreement to which you have just referred.

A. It is.

Q. Was that signed by you on or about the date it bears?

A. It was.

Q. Both individually and on behalf of Milk Container Equipment Corporation?

A. That is right, sir.

Q. And after you signed it, what did you do with it, if anything?

A. Gave it to my attorney—after I signed this?

Q. Yes, sir.

A. I gave it to Milk Container.

By Mr. Voland: That is all. We offer this as Defendants' Exhibit 80.

By Mr. McCanna: To save time, could I ask a question now?

By Mr. Voland: Surely.

2764 *Cross-Examination by Mr. McCanna.*

Q. Mr. Brasile, is this invention which is mentioned in the "Whereas" clause, is that the same invention that was at one time assigned to Paper Pack or Pack Equipment Company?

A. No, sir.

Q. Is it the invention which is in this machine, Plaintiff's Exhibit 40?

A. Yes, sir.

By Mr. McCanna: That is all.

By Mr. Voland: May we have leave to substitute this carbon copy, subject to your comparison, this being one of the original records of the company, Mr. McCanna?

By Mr. McCanna: That is satisfactory.

By the Court: You may have such leave.

(Said document, so offered and received in evidence, was marked DEFENDANTS' EXHIBIT NO. 80.)

By Mr. Voland: That is all.

(Witness excused.)

• • • • •

145 And afterwards, to wit, on the 2nd day of June, 1955, being one of the days of the regular May term of said Court, in the record of proceedings thereof, in said entitled cause, before the Honorable John P. Barnes, District Judge, appears the following entry, to wit:

146 IN THE UNITED STATES DISTRICT COURT.

* * (Caption—54-C-277) * *

This being the day to which this cause was continued for further trial as to Cause 54 C 277, again come the parties by their counsel and the trial proceeds and the Court now having heard further arguments of counsel on the motion of defendants U. S. Dairies Sales Corporation, Purity Pack Corporation, Milk Container Equipment Corporation, Maurice J. Brasile and Eugene Blum for judgment of invalidity and non-infringement entered herein at the close of the plaintiff's case and on the motion of Maurice J. Brasile and Eugene Blum for dismissal entered herein at the close of the plaintiff's case and being fully advised in the premises it is

Ordered that said motions be and the same hereby are denied and that leave be and hereby is granted to said defendants to present the same material at the conclusion of all the evidence and the Court also having heard further arguments of counsel on the motion of defendants U. S. Filler Equipment, Inc., U. S. Carton Forming Corporation, Paper Pack Corporation, Pack Equipment Corporation and Albert A. Lewis for a directed finding entered herein at the close of the plaintiff's case and being fully advised in the premises enters its ruling on said motion and it is

Further Ordered that counsel for said defendants be and hereby is directed to prepare and submit draft order consistent therewith and on motion of the plaintiff by its counsel it is

147 Further Ordered that the entry of said draft order shall be postponed until June 6, 1955 at 10:00 A. M. and the trial proceeds and during the hearing of evidence for the defendants U. S. Dairies Sales Corporation, et al. the hour of adjournment having arrived it is

Further Ordered that this cause be and the same hereby is adjourned to June 3, 1955 at 10:15 A. M. for further trial.

148 And afterwards, to wit, on the 6th day of June, 1955, being one of the days of the regular June term of said Court, in the record of proceedings thereof, in said entitled cause before the Honorable John P. Barnes, District Judge, appears the following entry, to wit:

149 IN THE UNITED STATES DISTRICT COURT.

* * (Caption—54-C-277) * *

FINDINGS OF FACT.

1. The Plaintiff, The Mojonnier Dawson Company, is an Illinois corporation, and has its principal office and place of doing business at 9151 Fullerton Avenue, Franklin Park, Illinois.

2. The Defendants, U. S. Filler Equipment, Inc., U. S. Carton Forming Corporation, Pack Equipment Corporation and Paper Pack Corporation are Illinois corporations, and have their principal offices within this district and division.

3. The defendants, Albert A. Lewis, is a resident and inhabitant of this district and division.

4. This is an action arising under the Patent Laws of the United States, and the Second Amended Complaint charges infringement of Reissue Letters Patent No. 23,830, issued on May 18, 1954, entitled Dispensing Mechan-
150 ism with Time Controlled Flow. The original patent No. 2,667,990 was issued on February 2, 1954. The Plaintiff asserts that it is the sole owner of the entire right, title and interest in and to Reissue Patent No. 23,830. The claims charged to be infringed are Claims 1, 6 and 7 of said Reissue Patent, and the structure charged to be an infringement thereof is that incorporated in the macnine bearing serial number MJ SA 3028 and introduced in evidence as Plaintiff's Exhibit 40.

5. The defendants, U. S. Filler Equipment, Inc., U. S. Carton Forming Corporation, Pack Equipment Corporation, Paper Pack Corporation, were organized in good faith before the issuance of the patent in suit for the purpose of selling or leasing milk filling machines manufactured by the Plaintiff, and were not organized for the purpose of avoiding liability for alleged infringement of the patent in suit.

6. The defendant, Albert A. Lewis, became financially interested in the defendants, U. S. Filler Equipment, Inc., U. S. Carton Forming Corporation, Pack Equipment Corporation and Paper Pack Corporation, in good faith.

7. None of the defendants, U. S. Filler Equipment, Inc., U. S. Carton Forming Corporation, Pack Equipment Corporation, Paper Pack Corporation and Albert A. Lewis, has at any time since February 2, 1954, the date of the issuance of the original patent in suit, made, used, sold or leased, or participated in the manufacture, use, sale or lease, of any of the machines charged to infringe the specified claims of the patent in suit.

151 8. None of the defendants, U. S. Filler Equipment, Inc., U. S. Carton Forming Corporation, Pack Equipment Corporation, Paper Pack Corporation and Albert A. Lewis, is in any manner financially interested in the Brasile Group Defendants, namely—U. S. Dairies Sales Corporation, Purity Pack Corporation and Milk Container Equipment, Inc.

9. None of the defendants, U. S. Filler Equipment, Inc., U. S. Carton Forming Corporation, Pack Equipment Corporation, Paper Pack Corporation and Albert A. Lewis, has at any time participated in the management of the defendants, U. S. Dairies Sales Corporation, Purity Pack Corporation and Milk Container Equipment, Inc.

10. For some months prior to February 2, 1954, the defendants, Maurice J. Brasile and Eugene Blum, ceased to have any connection whatever with the defendants, U. S. Filler Equipment, Inc., U. S. Carton Forming Corporation, Pack Equipment Corporation and Paper Pack Corporation, and have not participated in the management of said corporations.

11. The defendants U. S. Dairies Sales Corporation, Purity Pack Corporation and Milk Container Equipment, Inc. are separate and distinct entities wholly unconnected with the defendants U. S. Filler Equipment, Inc., U. S. Carton Forming Corporation, Pack Equipment Corporation, Paper Pack Corporation and Albert A. Lewis, or any of them.

Enter:

John P. Barnes,
United States District Judge.

Chicago, Illinois,
June 6, 1955.

152 IN THE UNITED STATES DISTRICT COURT.

* * (Caption—54-C-277) * *

CONCLUSIONS OF LAW.

1. This is an action arising under the Patent Laws of the United States.

2. This Court has jurisdiction of the parties and of the subject matter of this action.

3. The burden is on the Plaintiff to establish infringement of the patent in suit by all of the Defendants.

4. The Plaintiff has totally failed to sustain this burden in that the Plaintiff has failed to show that the Defendants, U. S. Filler Equipment, Inc., U. S. Carton Forming Corporation, Pack Equipment Corporation, Paper Pack Corporation and Albert A. Lewis, has at any time since February 2, 1954, the date of the issuance of the original patent No. 2,667,990, committed any acts which could consti-
153 tute infringement or participating in the infringement of the patent in suit.

5. The Motion of the Defendants U. S. Filler Equipment, Inc., U. S. Carton Forming Corporation, Pack Equipment Corporation, Paper Pack Corporation and Albert A. Lewis, under Rule 41 (b), for a Directed Finding at the Close of the Plaintiff's Case, is granted for the reason that upon the facts and the law the Plaintiff has shown no right to relief as against these Defendants.

6. This action should be dismissed as against the defendants U. S. Filler Equipment, Inc., U. S. Carton Forming Corporation, Pack Equipment Corporation, Paper Pack Corporation and Albert A. Lewis.

7. The defendants U. S. Filler Equipment, Inc., U. S. Carton Forming Corporation, Pack Equipment Corporation, Paper Pack Corporation and Albert A. Lewis are entitled to recover their taxable costs.

8. The defendants U. S. Filler Equipment, Inc., U. S. Carton Forming Corporation, Pack Equipment Corporation, Paper Pack Corporation and Albert A. Lewis are not entitled to recover their reasonable attorneys fees to be taxed as costs in this cause.

9. The defendants U. S. Filler Equipment, Inc., U. S. Carton Forming Corporation, Pack Equipment Corporation, Paper Pack Corporation and Albert A. Lewis, are

entitled to a judgment in their favor and against the Plaintiff.

154 10. A judgment in favor of said defendants and against the Plaintiff shall be entered at the same time a judgment is entered on the merits at the conclusion of this case to avoid two appeals.

Enter:

John P. Barnes,
United States District Judge.

Chicago, Illinois,
June 6, 1955.

155 And afterwards on, to wit, the 15th day of November, 1955 there was filed in the Clerk's office of said Court a certain Memorandum of the Court in words and figures following, to wit:

156 UNITED STATES DISTRICT COURT.

* * (Caption—54-C-277) * *

MEMORANDUM.

This is a patent infringement suit, brought by the plaintiff, The Mojonnier Dawson Company, against seven corporate defendants and three individual defendants as follows: U. S. Dairies Sales Corporation, Purity Pack Corporation, Milk Container Equipment Corporation, Maurice J. Brasile and Eugene Blum (known as the Brasile Group), and U. S. Filler Equipment Inc., U. S. Carton Forming Corporation, Paper Pack Corporation, Pack Equipment Corporation and Albert A. Lewis (known as the Lewis Group). The case went to trial on two counts of a complaint, one alleging infringement of Reissue Patent No. 23,830 to A. B. Mojonnier for a Dispensing Mechanism With Time Controlled Flow, and the other count alleging unfair competition in aggravation of the infringement, and also on a counter-claim by the Brasile Group of defendants charging plaintiff with unfair competition. The court made a finding for the Lewis Group of defendants at the close of the plaintiff's case.

Perhaps it will clear the atmosphere a bit if the court states at once that it does not believe there was any unfair competition on either side. The plaintiff owned a patent

which it thought was valid and infringed by the de-
157 fendants. The defendants thought the patent was invalid and that if it was valid that they did not infringe it. Both sides did what human beings usually do under those circumstances, nothing more. So the case is reduced to the simple patent infringement suit,—all that it ever should have been.

During the course of the court's study of the patent involved in this case, which study began with the trial of the case commencing on May 17, 1955, and ending on June 10, 1955, and extended through the examination of the briefs of counsel, both before and after the oral argument on September 19, 1955, and down to the time of the filing of this memorandum, the court's tentative views in respect of the validity of the patent have varied. At first, because the various elements of the device of the patent were old even to the writer, who cannot claim to be more than a mere lawyer and who certainly is not the "mechanic skilled in the art" of patent lawyers, whose knowledge would unquestionably be broader and deeper than that of the writer, the court was inclined to the opinion that the patent could not be valid. Later, upon the presentation of evidence which at the time seemed to indicate to the court that the alleged invention of the patent had had great commercial success, the court came to the view that perhaps there was something in the patent that the court had not at first appreciated. Further study has convinced the court that the patent is invalid.

The device of the patent is said to contain eight basic elements:

158 (1) a fluid container;
(2) means for supplying fluid to said container;
(3) means in said container operable to maintain fluid in the container at a preselected level;
(4) a dispending valve mounted on the container;
(5) a solenoid for operating said dispensing valve;
(6) a member extending through the container interconnecting the solenoid and the dispensing valve;
(7) an interval timer; and
(8) means to actuate the timer.

Each one of these elements is old, so that patentability, if it exists, must be based on the fact that the device is a new combination of the old elements resulting from the application of something more than mere mechanical skill

"The conjunction or concert of known elements must contribute something; only when the whole in some way exceeds the sum of its parts is the accumulation of old devices patentable." The plaintiff, in an effort to demonstrate that the patent discloses a patentable combination, says: "The Mojonnier invention is a simple, relatively inexpensive, practical, accurate, dependable, sanitary, easily cleaned filling machine operating on the timed orifice flow or time controlled uniform flow principle." All this may be conceded to be true but it does not point out wherein "the whole * * * exceeds the sum of its parts."

It is true, of course, as the plaintiff points out, that one cannot show anticipation by separating a "combination into its component elements, and in the light of hindsight * * * expose them piecemeal as already known to the * * * art." But this rule does not come into operation until one has determined that he is dealing with a combination rather than an aggregation.

159 The court has come to the opinion that the patentee aggregated elements old in the art which, in the aggregation, do individually and collectively only what they have always done and no more, and that for this reason the patent is invalid.

Having come to the foregoing conclusion, it seems to be unnecessary to consider the numerous other contentions put forward in the briefs.

Counsel for defendants may prepare and, within a short day, on notice, present drafts of findings of fact, conclusions of law, and a judgment order not inconsistent with the views above expressed.

John P. Barnes,
Judge.

November 15, 1955.

160 And afterwards, to wit, on the 21st day of February, 1956, being one of the days of the regular February term of said Court, in the record of proceedings thereof, in said entitled cause, before the Honorable John P. Barnes, District Judge, appears the following entries, to wit:

161 UNITED STATES DISTRICT COURT.

* * (Caption—54-C-277) * *

FINDINGS OF FACT AND CONCLUSIONS OF LAW.

Findings of Fact.

1. The plaintiff, the Mojonnier Dawson Company, is an Illinois corporation and has its principal office and place of business at 9151 Fullerton Avenue, Franklin Park, Illinois.

2. The defendants, U. S. Dairies Sales Corporation, Purity Pack Corporation, and Milk Container Equipment Corporation, are Illinois corporations and have their principal offices within this District and Division.

3. The defendants, Maurice J. Brasile and Eugene Blum, are residents and inhabitants of this District and Division.

4. The corporate defendants, U. S. Dairies Sales Corporation, Purity Pack Corporation, and Milk Container Equipment Corporation, Maurice J. Brasile and Eugene Blum, are known as the Brasile Group of defendants.

5. This is an action arising under the Patent Laws of the United States; the original complaint was filed February 19, 1954, alleging infringement by the Brasile Group of defendants and the Lewis Group of defendants, namely, U. S. Filler Equipment, Inc., U. S. Carton Forming Corporation, Paper Pack Corporation Pack Equipment Corporation and Albert A. Lewis, of U. S. Letters Patent No. 2,667,990 granted February 2, 1954, to plaintiff as assignee of the inventor Albert B. Mojonnier entitled "Dispensing Mechanism with Time Controlled Flow"; an application for the reissuance of said letters patent was filed on February 24, 1954, and a Reissue Letters Patent No. 23,830

162 subsequently issued on May 18, 1954, to Albert B. Mojonnier, assigned on its face to plaintiff; a second amended complaint was filed on September 21, 1954, after

the reissue patent had become substituted for said original patent on May 19, 1954; in the complaints plaintiff asserts that it is the sole owner of the entire right, title and interest in and to Reissue Patent No. 23,830; the claims charged to be infringed are claims 1, 6 and 7 of said reissue patent and the structure charged to be an infringement thereof is that incorporated in the machine bearing serial number MJSA 3028, introduced in evidence as plaintiff's Exhibit 40, together with that incorporated in the machine which was being made and sold by one or more of the Brasile Group of defendants at the time of institution of this suit, the construction of a portion of that device being illustrated by defendants' Exhibit 10.

6. The second amended complaint included three counts: Count I alleging infringement of the Reissue Patent No. 23,830 by defendants; Count II alleging infringement of plaintiff's alleged trademark "Electromatic" and the designation "M-D"; Count III alleging unfair competition in aggravation of the infringement. On September 30, 1954, this court dismissed Count II for lack of jurisdiction, on a motion brought by the Brasile Group of defendants.

7. The Brasile Group of defendants filed a counter-claim on October 18, 1954, together with an Answer to the second Amended Complaint, alleging that the plaintiff had committed acts of unfair competition against the Brasile Group of defendants, and seeking a recovery of damages in the sum of Two Hundred Thousand Dollars ($200,000) as compensatory damages and a like amount as exemplary or punitive damages, together with their costs and such other and further relief as the court may deem proper.

163 8. On March 25, 1955, prior to the trial of this action, the Brasile Group of defendants made a motion that Counts I and III of the complaint be tried separately and in that order, which motion was entered by the court. During the presentation of the plaintiff's prima facie case, at the insistence of plaintiff, the court ruled that this separation need not be adhered to and plaintiff's evidence relating to both Counts I and III of the complaint was presented simultaneously.

9. At the close of plaintiff's prima facie case, the court ruled in favor of a motion made by the Lewis Group of defendants for a directed finding dismissing the action as against the Lewis Group of defendants and entered findings of fact and conclusions of law with respect to said Lewis Group of defendan

10. Mr. Albert B. Mojonnier is an engineer, skilled in the field of dispensing fluids and means therefor. Some time prior to 1947 Mr. Mojonnier conceived the idea of the alleged invention covered by the reissue patent in suit. A patent application, disclosing and claiming the alleged invention, was filed on April 4, 1949. On December 29, 1951, while this patent application was still pending, a contract was entered into between plaintiff as the "seller" and John E. Polivka and Maurice J. Brasile as the "purchasers." This contract gave the purchasers and their successors the exclusive right to purchase from the "seller" a filler mechanism of the type specified in the contract. This was an arms-length relationship of seller and purchaser and there is no proof that a confidential relation grew out of disclosures made by plaintiff through Mr. Mojonnier to Mr. Brasile concerning the filler mechanism which was the subject matter of the contract. The information furnished to Mr. Brasile was either obvious from an inspection of one of the filler mechanisms manufactured by the plaintiff, or already common knowledge in the 164 trade. There is no proof that any of the disclosures allegedly made by plaintiff through Mr. Mojonnier to Mr. Brasile were ever used in the development of either the subsequently constructed Brasile experimental machine (Defendants' Exhibit 33) or the later manufactured accused device (Plaintiff's Exhibit 40).

11. The construction by the Brasile Group of defendants of an experimental model of an automatic carton opening, filling, closing and sealing mechanism (Defendants' Exhibit 33) during the life of the agreement dated December 29, 1951 was a not improper effort by Brasile Group of defendants to provide an improved mechanism for the dairy industry, and it is shown by the evidence that it was originally the intention of the Brasile Group of defendants to incorporate the plaintiff's filling mechanism as a part of such a device. The Brasile Group of defendants' concern regarding the possible termination of this contract of December 29, 1951, led them to make inquiries regarding the possible construction of a mechanism incorporating the improvements embodied in this experimental model (Defendants' Exhibit 33) prior to its termination. There is no proof that up until the termination of the contract of December 29, 1951, Brasile Group of defendants were planning to make a filling mechanism copied from plaintiff's mechanism to be incorporated in an opening,

filling, closing and sealing device. At the time the contract of December 29, 1951, was terminated plaintiff's filler was not patented but was merely the subject matter of a patent application as recited in the contract of December 29, 1951. Up to the time the contract of December 29, 1951, was terminated by plaintiff, there is no proof that the parties thereto or any of the Brasile Group of defendants actually sold or even entered into any contract to sell any filler mechanism competitive with plaintiff's filler.

165 12. After the termination of the contract of December 29, 1951, the parties thereto and their successors reverted to a normal competitive relationship. The Brasile Group of defendants was free to arrange to have a carton opening, filling, closing and sealing mechanism manufactured by others than plaintiff according to the Brasile Group of defendants' plans and specifications. The privilege to compete with plaintiff, their previous supplier, was not modified in any way by the Brasile Group of defendants' previous contractual relationship with plaintiff.

13. The physical appearance of the Brasile Group of defendants' commercial filler was not copied from that of plaintiff's commercial fillers except in so far as they share functional elements in common. The physical appearance of the two fillers is sufficiently different so that it is unlikely that a purchaser with ordinary powers of discernment would mistake one for the other. There is no evidence that the appearance of plaintiff's filler has acquired any secondary meaning in the market. There is no evidence that any customer or potential customer has been confused into taking the Brasile Group of defendants' filler for plaintiff's. There is no evidence that the Brasile Group of defendants has ever attempted to palm their filler off as plaintiff's.

14. U. S. Letters Patent No. 2,667,990 was granted on February 2, 1954, the original complaint in this action was filed February 19, 1954, the application for reissuance of this original patent was filed February 24, 1954, the oath accompanying said application having been signed on February 22, 1954, only three days after the filing of the original complaint.

15. The device disclosed and claimed in the Mojonnier reissue patent in suit contains eight basic elements:

166 1) a fluid container

2) means for supplying fluid to said container

3) means in said container operable to maintain the fluid in the container at a preselected level
4) a dispensing valve mounted on the container
5) a solenoid for operating said dispensing valve
6) a member extending through the container interconnecting the solenoid and the dispensing valve
7) an interval timer
8) means to actuate the timer.

16. Each of the elements listed in Finding 15 is old, being disclosed in one or more of the following prior art patents and devices:

Prior Art Patents Relied Upon by Defendants.

Purvis, 517,127, March 27, 1894
Boyer, 668,303, February 19, 1901
Newman, 711,069, October 14, 1902
La Porte, 1,166,607, January 4, 1916
Zsoldos, 1,639,679, August 23, 1927
Winton, 2,030,951, February 18, 1936
Fagan et al, 2,147,366, February 14, 1939
Larsen, 2,164,530, July 4, 1939
Lippold, 2,171,757, September 5, 1939
Hothersall et al, 2,222,617, November 26, 1940
Engels et al, 2,542,239, February 20, 1951
Milikian et al, 2,682,984, July 6, 1954

Prior Art Patents Cited by Patent Office During Prosecution of Mojonnier Patent.

Thompson, 1,381,442, June 14, 1921
Jackson, 1 531,007, March 24, 1925
Kohr, 1,553,385, September 15, 1925
Searing, 1,613,248, January 4, 1927
Ashkenaz, 2,254,833, September 2, 1941
Stevens, 2,308,960, January 19, 1943
McKinnis, 2,392,054, January 1, 1946
Osborne, 2,396,527, March 12, 1946
Bowman, 2,462,019, February 15, 1949
Warren, 2,515,363, July 18, 1950

Prior Art Device.

Kwik-Kafe Coffee Vending Machine, manufactured by The Rudd-Melikian Co., Philadelphia, Pa.

167 17. The device disclosed and claimed in the Mojonnier reissue patent in suit is merely an aggregation of elements old in the art which in the aggregation do individually and collectively only what they have always done and nothing more. Each of the elements in the aggregation continues to perform only its own function without modification of the function of any of the other elements due to that association. No new and unusual results are obtained from the device but merely that which would normally be expected from the assembly of an aggregation of old elements.

18. There is no proof that the volume of sales which has been achieved by the commercial embodiments of the device disclosed and claimed in the reissue patent in suit was the result of the invention. The proofs show that increased sales of the commercial embodiment for the dairy field were the result of the increase in the availability of paper cartons to the small dairyman, and that the sales of the commercial embodiment for the aerosol field dated from the development of the so-called low pressure "cold fill" process for aerosol containers. There was no long-felt need for a filler of the character disclosed and claimed in the reissue patent in suit, but rather a need for paper cartons for the small dairyman. A significant factor in the filling of this need for paper cartons was the success of the idea of the individual defendant, Mr. Brasile, for preforming Pur Pak cartons which through this means became available to the small dairyman.

19. This case is a simple patent suit, which is all that it ever should have been. Prior to the trial the court entered an order, on motion of the Brasile Group of defendants that Counts I and III of the complaint be tried separately and in that order so that the question of infringement and validity could be tried first in view of the dependence of Count III on Count I. At the insistence of plaintiff, this manner of trial was not adhered to. The resultant trial of this case consumed approximately sixteen trial days.

168 Conclusions of Law.

1. The court has jurisdiction of the subject matter and the parties to the action.

2. Neither the plaintiff nor the Brasile Group of defendants has engaged in any acts of unfair competition toward one another.

3. Mojonnier reissue patent No. 23,830 is invalid and void.

4. In view of the holding of invalidity on the grounds of unpatentable aggregation, it is unnecessary to consider the numerous other defenses advanced by the Brasile Group of defendants, namely:

a) Other grounds of invalidity:
   (1) If device true combination, anticipated by prior art
   (2) Insufficient and inadequate specification
   (3) Improper reissue
   (4) Device on sale more than one year prior to filing of application—statutory bar
b) Non-infringement
c) Intervening rights
d) Unenforceability—unclean hands
e) No individual liability.

5. The Brasile Group of defendants is entitled to a judgment in the usual form adjudging that said Mojonnier reissue patent No. 23,830 is invalid, and that there has been no unfair competition by either plaintiff or the Brasile Group of defendants with respect to one another.

John P. Barnes,
Judge.

February 21, 1956.

169 UNITED STATES DISTRICT COURT.

* * (Caption—54-C-277) * *

ORDER OF JUDGMENT.

This cause having come on to be heard upon the pleadings on file and upon proof presented in open court on behalf of each party and upon due notice to all counsel of record and each party having submitted written briefs and having made oral argument and the court having filed a written opinion and made findings of facts and conclusions of law,

It is Hereby Ordered, Adjudged and Decreed that:

1. United States Letters Patent Reissue No. 23,830 is invalid and void.
2. The complaint herein should be and hereby is dismissed for want of equity.
3. The counterclaim of the Brasile Group of defendants should be and hereby is dismissed for want of equity.
4. The Lewis Group and the Brasile Group of defendants recover from plaintiff their costs of suit to be fixed by further order of this court.

Dated at Chicago, Illinois, this 21st day of Febuary, 1956.

Enter:

John P. Barnes,
Judge.

170 And afterwards on, to wit, the 22nd day of March, 1956 came the Plaintiff by its attorneys and filed in the Clerk's office of said Court its certain Notice of Appeal (Clerk's Certificate of Mailing Attached) And Cost Bond on Appeal in words and figures following, to wit:

171 IN THE DISTRICT COURT OF THE UNITED STATES

For the Northern District of Illinois,

Eastern Division.

The Mojonnier Dawson Company, a corporation, *Plaintiff,*	Civil Action No. 54 C 277
vs.	
U. S. Dairies Sales Corporation, a corporation, *et al.,* *Defendants.*	Consolidated with No. 55 C 137

NOTICE OF APPEAL.

To: Hon. Roy H. Johnson, Clerk
United States District Court
United States Court House
Chicago 4, Illinois

Howard W. Clement
Wilkinson, Huxley, Byron & Hume
38 South Dearborn Street
Chicago 3, Illinois
Attorneys for Brasile group defendants

Louis Bernat
135 South LaSalle Street
Chicago 3, Illinois
Attorney for Lewis group defendants

Richard R. Voland
Defrees, Fiske, O'Brien & Thomson
105 South LaSalle Street
Chicago 3, Illinois
Attorneys for Brasile group defendants

Wright & Wright
11 South LaSalle Street
Chicago 3, Illinois
Attorneys for plaintiff
Consolidated No. 55 C 137

Please Take Notice that the plaintiff, The Mojonnier Dawson Company, an Illinois corporation, hereby appeals to the United States Court of Appeals for the Seventh Circuit, from the judgment of Honorable John P. Barnes, entered in the above entitled action on February 21, 1956.

John F. McCanna,
Room 2300,
20 North Wacker Drive,
Chicago, Illinois,
Attorney for Plaintiff.

March 22, 1956

Endorsed: Filed Mar. 22, 1956. Roy H. Johnson, Clerk.

172 United States of America,
Northern District of Illinois. } ss.

* * (Caption—54-C-277) * *

CERTIFICATE OF MAILING.

I, Roy H. Johnson, Clerk of the United States District Court for the Northern District of Illinois, do hereby certify that on the 22nd day of March, 1956, in accordance with Rule 73(b) of the Federal Rules of Civil Procedure, a copy of the foregoing notice of Appeal was mailed to:

Mr. Howard W. Clement
Wilkinson, Huxley, Byron & Hume
38 South Dearborn Street
Chicago 3, Illinois

Mr. Louis Bernat
135 South LaSalle Street
Chicago 3, Illinois

Mr. Richard E. Voland
Defrees, Fiske, O'Brien & Thomson
17th Fl. 105 South LaSalle Street
Chicago 3, Illinois

Wright & Wright
11 South LaSalle Street
Chicago 3, Illinois.

In Testimony Whereof, I have hereunto subscribed my name and affixed the seal of the aforesaid Court at Chicago, Illinois, this 22nd day of March, 1956.

(Seal)

Roy H. Johnson,
Clerk.
By James F. Kuchta,
Deputy Clerk.

* * * * *

174 And on the same day, to wit, the 22nd day of March, 1956 came the Defendants and Counterclaimants, U. S. Dairies Sales Corporation, Purity Pack Corporation, Milk Container Equipment Corporation, Maurice Brasile and Eugene Blum, by their attorneys, and filed in the Clerk's office of said Court their certain Notice of Appeal (Clerk's Certificate Of Mailing Attached) in words and figures following, to wit:

175 IN THE UNITED STATES DISTRICT COURT

For the Northern District of Illinois

Eastern Division.

The Mojonnier-Dawson Company, a corporation, et al., *Plaintiff,* *vs.* U. S. Dairies Sales Corporation, a corporation, et al., *Defendants.*	Civil Action No. 54 C 277

NOTICE OF APPEAL.

Notice is hereby given that U. S. Dairies Sales Corporation, Purity Pack Corporation, Milk Container Equipment Corporation, Maurice Brasile and Eugene Blum, defendants and counter-claimants herein, hereby appeal and cross-appeal to the United States Court of Appeals for the Seventh Circuit from that part of the Order of Judgment entered in the above-entitled cause on February 21, 1956 which provides as follows:

"The counterclaim of the Brasile Group of defendants should be and hereby is dismissed for want of equity."

and also from the paragraph numbered 4 of said Order of Judgment in so far as said paragraph 4 does not provide for recovery by said defendants and counterclaimants of their reasonable attorney's fees.

Dated, March 22, 1956.

Defrees, Fiske, O'Brien & Thomson,
By Richard E. Voland,
Attorneys for said Defendants and Counterclaimants.

176 United States of America, }
Northern District of Illinois. } ss.

* * (Caption—54-C-277) * *

CERTIFICATE OF MAILING.

I, Roy H. Johnson, Clerk of the United States District Court for the Northern District of Illinois, do hereby certify that on March 22, 1956, in accordance with Rule 73(b) of the Federal Rules of Civil Procedure, a copy of the foregoing Notice of Appeal was mailed to:

Louis Bernat, 135 S. LaSalle St., Chicago 3, Illinois

John F. McCanna, 20 N. Wacker Drive, Chicago, Illinois

Wright and Wright, 11 S. LaSalle St., Chicago 3, Illinois

In Testimony Whereof, I have hereunto subscribed my name and affixed the seal of the aforesaid Court at Chicago, Illinois, this 22nd day of March, 1956.

Roy H. Johnson,
Clerk.

(Seal)

By James F. Kuchta,
Deputy Clerk.

177 And on, the same day, to wit, the 22nd day of March, 1956 came te Defendants, U. S. Filler Equipment, Inc., U. S. Carton Forming Corporation, Pack Equipment Corporation, Paper Pack Corporation and Albert A. Lewis, by their attorneys, and filed in the Clerk's office of said Court their certain Notice of Appeal and Cross-Appeal (Clerk's Certificate Of Mailing Attached) in words and figures following, to wit:

178 IN THE UNITED STATES DISTRICT COURT

For the Northern District of Illinois,

Eastern Division.

The Mojonnier Dawson Company, a corporation, *Plaintiff,*
vs.
U. S. Dairies Sales Corporation, a corporation, et al., *Defendants.*
} Civil Action No. 54 C 277

NOTICE OF APPEAL.

U. S. Filler Equipment, Inc., U. S. Carton Forming Corporation, Pack Equipment Corporation, Paper Pack Corporation and Albert A. Lewis, defendants, hereby appeal and cross-appeal from Paragraph 4 of Order of Judgment heretofore entered in this cause on the 21st day of February 1956 insofar as the said Paragraph 4 does not provide for the recovery of attorneys' fees by these Defendants.

U. S. Filler Equipment, Inc.,
U. S. Carton Forming Corporation,
Pack Equipment Corporation,
Paper Pack Corporation and
Albert A. Lewis.
Louis Bernat,
Their Attorney.

March 22, 1956
Louis Bernat,
135 South LaSalle Street,
Chicago 3, Illinois.

179 United States of America, }
Northern District of Illinois. } ss:

* * (Caption—54-C-277) * *

CERTIFICATE OF MAILING.

I, Roy H. Johnson, Clerk of the United States District Court for the Northern District of Illinois, do hereby certify that on March 22, 1956, in accordance with Rule 73(b) of the Federal Rules of Civil Procedure, a copy of the foregoing Notice of Appeal was mailed to:

Howard W. Clement, Wilkinson, Huxley, Byron & Hume, 38 S. Dearborn St., Chicago, Illinois.

Richard E. Voland, Defrees, Fiske, O'Brien & Thomson, 105 S. La Salle St., Chicago 3, Illinois,

Wright & Wright, 11 S. La Salle St., Chicago 3, Illinois,

John F. McCanna, Room 2300, 20 N. Wacker Drive, Chicago, Illinois.

In Testimony Whereof, I have hereunto subscribed my name and affixed the seal of the aforesaid Court at Chicago, Illinois, this 22nd day of March, 1956.

Roy H. Johnson,
Clerk.
By James F. Kuchta,
Deputy Clerk.

(Seal)

* * * * *

182 And afterwards on, to wit, the 6th day of April, 1956 came the Defendants, U. S. Filler Equipment, Inc., et al., by their attorneys and filed in the Clerk's office of said Court their certain Statement Of Points And Bond On Appeal in words and figures following, to wit:

183 IN THE UNITED STATES DISTRICT COURT.

* * (Caption—54-C-277) * *

STATEMENT OF POINTS ON WHICH SAID DEFENDANTS U. S. FILLER EQUIPMENT, INC., U. S. CARTON FORMING CORPORATION, PACK EQUIPMENT CORPORATION, PAPER PACK CORPORATION, AND ALBERT A. LEWIS INTEND TO RELY ON APPEAL.

The above Defendants intend to rely on appeal only on the point that the Judgment of February 21, 1956, is in error in that it does not provide for the recovery of attorneys' fees by said Defendants under the provisions of Title 35 USC, § 285.

U. S. Filler Equipment, Inc.
U. S. Carton Forming Corporation.
Pack Equipment Corporation.
Paper Pack Corporation.
Albert A. Lewis.
Louis Bernat,
135 South LaSalle St.,
Chicago 3, Illinois,
Their Attorney.

April 6, 1956.

184 CERTIFICATE OF SERVICE.

A copy of the foregoing Statement of Points on Which Said Defendants U. S. Filler Equipment, Inc., U. S. Carton Forming Corporation, Pack Equipment Corporation, Paper Pack Corporation, and Albert A. Lewis Intend to Rely on Appeal was served upon John F. McCanna, Attorney for Plaintiff, by mailing to him at his address, 408 S. Oak Park Blvd., Oak Park, Illinois, this 6th day of April, 1956.

Louis Bernat.

* * * * *

186 And afterwards on, to wit, the 16th day of April, 1956 came the Plaintiff-Appellant by its attorneys and filed in the Clerk's office of said Court its certain Statement Of Points On Appeal, And Designation Of Contents Of Record On Appeal in words and figures following, to wit:

187 IN THE DISTRICT COURT OF THE UNITED STATES.

* * (Caption—54-C-277) * *

PLAINTIFF-APPELLANT'S STATEMENT OF POINTS ON APPEAL.

Plaintiff intends to rely on the following points on this appeal:

1. The court erred in holding United States Letters Patent reissue No. 23,830 invalid and void.
2. The court erred in failing to hold claims 1, 6 and 7 of said reissue patent valid and infringed.
3. The court erred in holding the Mojonnier reissue patent No. 23,830 invalid on the ground of unpatentable aggregation.
4. The court erred in holding that the Mojonnier reissue patent in suit is an aggregation of elements old in the art which in the aggregation do individually and collectively only what they have always done and no more.

188 5. The court erred in holding that the Mojonnier reissue patent is not a new combination of elements resulting from the application of something more than mere mechanical skill.

6. The court erred in holding "The plaintiff, in an effort to demonstrate that the patent discloses a patentable combination, says: 'The Mojonnier invention is a simple, relatively inexpensive, practical, accurate, dependable, sanitary, easily cleaned filling machine operating on the timed orifice flow or time controlled uniform flow principle.' All this may be considered to be true but it does not point out wherein 'The whole * * * exceeds the sum of its parts' ", and in failing to recognize and appreciate that plaintiff's quoted statement from the record is a summary of ultimate or objective facts and results which are supported by an abundance of clear and convincing evidence.

7. The court erred in failing to recognize and appreciate from the evidence the fact that in each claim 1, 6 and 7, respectively, the elements coact in such novel manner as to produce new results wherein "the whole exceeds the sum of its parts".

8. The court erred in holding that the device disclosed and claimed in the Mojonnier reissue patent contains eight basic elements substantially as defined in claim 1 of said patent and in failing to recognize and appreciate the further and more specific definition of invention as recited in claims 6 and 7 of said patent, and in failing to hold valid said claims 6 and 7.

189 9. The court erred in overlooking or disregarding the fact that nowhere in the prior art does any float or other means maintain within small limits a predetermined liquid level, which level controls the outflow through the discharge orifice of an equal predetermined quantity of fluid for each time unit of flow controlled by the timer, and that such subject matter as a whole was not obvious at the time of the Mojonnier invention to a person having ordinary skill in the art to which said subject matter pertains.

10. The court erred in failing to recognize and appreciate from the evidence the fact that the Mojonnier invention defined in claims 1, 6 and 7 of said reissue patent is a new combination of elements coacting in a manner unknown to the prior art to produce new and useful results and marking a distinct advance in the art to which the invention pertains, and that the subject matter of said combination as a whole was not obvious at the time of the Mojonnier invention to a person having ordinary skill in the art to which said subject matter pertains; and in consequence thereof the court erred in failing to hold said claims valid.

11. The court erred in holding that the Kwik-Kafe Coffee Vending Machine is a prior art device.

190 12. The court erred in holding that there was no long-felt need for a filler of the character disclosed and claimed in the Mojonnier reissue patent in suit, but rather a need for paper cartons for the small dairyman.

13. The court erred in failing to recognize and appreciate from the evidence and to hold that the Mojonnier invention filled a long-felt need in the dairy industry, which prior to the invention had not been filled.

14. The court erred in holding that a significant fac-

tor in the filling of this need for paper cartons was the success of the idea of the individual defendant, Mr. Brasile, for preforming Pure Pak cartons which through this means became available to the small dairyman.

15. The court erred in holding that there is no proof that the volume of sales which has been achieved by the commercial embodiments of the device disclosed and claimed in the Mojonnier reissue patent in suit was the result of the invention, and in failing to recognize and appreciate from the evidence that the Mojonnier invention revolutionized the filling practice in the dairy industry.

191 16. The court erred in holding that the proofs show that the increased sales of the commercial embodiment of the Mojonnier device for the dairy field were the result of the increase in the availability of paper cartons to the small dairyman; rather than primarily the result of the Mojonnier invention.

17. The court erred in holding that the sales of the commercial embodiment of the Mojonnier device for the aerosol field dated from the development of the so-called low pressure "cold fill" process for aerosol containers, and in failing to recognize and appreciate from the evidence that the Mojonnier invention displaced the prior devices in this field and revolutionized the filling practice in the aerosol industry.

18. The court erred in holding that there was an arms-length relationship of seller and purchaser between plaintiff and defendants and there is no proof that a confidential relation grew out of disclosures made by plaintiff through Mr. Mojonnier to Mr. Brasile concerning the filler mechanism which was the subject matter of the contract.

19. The court erred in holding that the information furnished to Mr. Brasile was either obvious from an inspection of one of the filler mechanisms manufactured by the plaintiff, or already common knowledge to the trade.

192 20. The court erred in holding that there is no proof that any of the disclosures allegedly made by plaintiff through Mr. Mojonnier to Mr. Brasile were ever used in the development of either the subsequently constructed Brasile experimental machine (Defendants' Exhibit 33) or the latter manufactured accused device (Plaintiff's Exhibit 40).

21. The court erred in holding that it was the Brasile's

group of defendants' concern regarding the plaintiff's termination of the contract of December 29, 1951 which led them to make inquiries regarding the plaintiff's construction of a mechanism incorporating alleged improvements embodied in the experimental model (Defendants' Exhibit 33) prior to the termination of said contract.

22. The court erred in holding that there is no proof that up until the termination of the contract of December 29, 1951, the Brasile group of defendants were planning to make a filling mechanism copied from plaintiff's mechanism to be incorporated in an opening, filling, closing and sealing device.

23. The court erred in holding that there is no proof that up to the time the contract of December 29, 1951 was terminated by plaintiff, that the parties thereto or any of the Brasile group of defendants actually sold or even entered into any contract to sell any filler mechanism competitive with plaintiff's filler.

193 24. The court erred in holding that the construction by the Brasile group of defendants of an experimental model (Defendants' Exhibit 33) during the life of the agreement dated December 29, 1951 was a not improper effort by the Brasile group of defendants to provide an improved mechanism for the dairy industry, and in so holding the court erred in failing to recognize that Defendants' Exhibit 33 incorporated filling mechanism surreptitiously copied from plaintiff's filler with attempted evasions by reversal of parts and by the full equivalency of parts.

25. The court erred in holding that after the termination of the contract of December 29, 1951 the parties thereto and their successors reverted to a normal competitive relationship.

26. The court erred in holding that after the termination of said contract of December 29, 1951 the Brasile group of defendants was free to arrange to have a carton filling mechanism manufactured by others than plaintiff according to the Brasile group of defendants' plans and specifications, and in failing to recognize that such filling mechanism embodied the plaintiff's invention and such arrangement with others was unauthorized by plaintiff.

27. The court erred in holding that the privilege of the Brasile group of defendants to compete with plaintiff, their previous supplier under the contract of December 29, 1951, was not modified in any way by the previous contrac-

tual relationship between plaintiff and said Brasile group of defendants.

194 28. The court erred in holding that the physical appearance of the Brasile group of defendants' commercial filler was not copied from that of plaintiff's commercial fillers except insofar as they share functional elements in common; and in this the court erred in failing to recognize and find in plaintiff's proofs, the facts that these defendants copied not only the functional elements of plaintiff's invention, but also made a "Chinese copy" of non-essential details of construction such as parts, sizes, selection of types and kinds of units, and arrangements which make up the "know how" in the manufacture of plaintiff's filler.

29. The court erred in holding "This case is a simple patent suit, which is all that it ever should have been"; and in failing to recognize the fact that Count III of the complaint incorporates Count I and is essentially a charge of patent infringement specifying the contractual and confidential relationship between the plaintiff and the defendants and the wrongful appropriation of plaintiff's invention, all in aggravation of the infringement and not as a separate cause of unfair competition, and in failing to recognize that the length of the trial was attributed largely to the elaborate and unfounded allegations of defenses and to the conduct of the defendants which made for confusion and extended the length of the trial.

195 30. The court erred in deciding that "both sides did what human beings usually do under those circumstances, nothing more."

31. The court erred in dismissing the Lewis group of defendants.

32. The court erred in dismissing plaintiff's complaint for want of equity.

33. The court erred in ordering that the Lewis group and the Brasile group of defendants recover from plaintiff their costs of this suit.

34. The court erred in dismissing the complaint and in not granting plaintiff the relief therein prayed.

John F. McCanna,
Attorney for Plaintiff-Appellant,
Rm. 2300—20 N. Wacker Dr.,
Chicago, Illinois.

April 16, 1956.

196 CERTIFICATE OF SERVICE.

A copy of the foregoing "Statement of Points on Appeal" was served upon each of the following:

Richard E. Voland,
Defrees, Fiske, O'Brien & Thomson,
105 S. LaSalle Street,
Chicago 3, Illinois,
Attorneys for Brasile Group Defendants.

Louis Bernat,
135 S. LaSalle Street,
Chicago 3, Illinois,
Attorney for Lewis Group Defendants.

Wright & Wright,
11 S. LaSalle Street,
Chicago 3, Illinois,
Attorneys for Plaintiff.

Consolidated No. 55-C-137.

by mailing such copy to each said attorneys at the respective addresses shown above, this 16th day of April, 1956.

John F. McCanna.

* * * * *

208 And on, the same day to wit, the 26th day of April, 1956 came the Brasile Group of Defendants, Appelless and Cross-Appellants by their attorneys, and filed in the Clerk's office of said Court their certain Statement of Points in words and figures following, to wit:

209 In the District Court of the United States.

* * (Caption—54-C-277) * *

STATEMENT OF POINTS ON WHICH THE BRASILE GROUP DEFENDANTS, CROSS-APPELLANTS, INTEND TO RELY IN THEIR CROSS-APPEAL TO THE UNITED STATES COURT OF APPEALS FOR THE SEVENTH CIRCUIT.

1. The Court erred in entering the conclusion of law that plaintiff had not engaged in acts of unfair competition towards the Brasile Group defendants.

2. The Court erred in entering judgment dismissing for want of equity the Counterclaim of the Brasile Group defendants.

3. The Court erred in failing to find that plaintiff's action was brought and maintained in bad faith and in failing to find that plaintiff had been guilty of inequitable and unconscionable conduct towards the Brasile Group defendants.

210 4. The Court erred in failing to award reasonable attorneys' fees for the Brasile Group defendants pursuant to Section 285 of Title 35 of the United States Code.

Respectfully submitted,

Richard E. Voland,
Attorney for U. S. Dairies Sales Corp., Milk Container Equipment Corp., Purity Pack Corp., Maurice J. Brasile and Eugene Blum (known as the Brasile Group defendants), Defendants and Cross-Appellants.

Dated, April 26, 1956.

Received a copy of the foregoing Statement of Points this 26th day of April, 1956.

John F. McCanna,
Attorney for Plaintiff-Appellant,
20 North Wacker Drive,
Suite 2300,

Louis Bernat,
Attorney for Lewis Group Deants,

Wright and Wright,
Attorneys for Plaintiff in Consolidated Case No. 55-C-137.

* * * * *

219 And afterwards on, to wit, the 3rd day of April, 1956 came the U. S. Dairies Sales Corporation, et al. (Brasile Group Defendants) by their attorneys, and filed in the Clerk's office of said Court their certain Notice, Bill of Costs, Affidavit and Taxation of costs, in words and figures following, to wit:

220 IN THE DISTRICT COURT OF THE UNITED STATES.
* * (Caption—54-C-277) * *

NOTICE.

To: John F. McCanna, Esq.
20 North Wacker Drive, Suite 2300
Chicago 6, Illinois,
Attorney for Plaintiff,

Louis Bernat, Esq.,
135 South LaSalle Street, Suite 1406,
Chicago 3, Illinois,
Attorney for Lewis Group Defendants,

Wright & Wright,
11 South LaSalle Street, Suit 1100,
Chicago 3, Illinois,
Attorneys for Plaintiff in
Consolidated Case No. 55 C 137

Please Take Notice that the attached Bill of Costs and Disbursements in the above-entitled cause will be presented to the Clerk of said Court at his office in the United States Court House in the City of Chicago, Illinois on the 3rd day of May 1956 at 11:00 o'clock in the forenoon of that day.

Dated April 30, 1956.

Richard E. Voland,
Attorney for Brasile Group Defendants
Defrees, Fiske, O'Brien & Thomson,
105 S. LaSalle Street, Chicago 3,
FRanklin 2-4000.

Received a copy of the within and foregoing Notice and of the Bill of Costs therein referred to this 30th day of April, 1956.

John F. McCanna,
Attorney for Plaintiff,
Louis Bernat,
Attorney for
Lewis Group Defendants.
Wright & Wright,
Attorneys
for Plaintiff in Consolidated
Case No. 55 C 137.

221 Exhibit A.

IN THE DISTRICT COURT OF THE UNITED STATES.

* * (Caption—54-C-277) * *

BILL OF COSTS.

1.	Attorneys' docket fee (Section 1923, Title 28, USCA)	$20.00	
2.	Attorneys' docket fee for each of the following depositions admitted in evidence at $2.50 each (Section 1923, Title 28, USCA)		
	Frank G. Brooks Carl F. Allen Khoren C. Melikian	7.50	
3.	Witness fees		
	Norman E. H. Deletzke— 8 days attendance each $4.00	32.00	
	Albert E. Geiss—50 cents mileage, $4.00 for one day's attendance	4.50	
	Lynn Scott Dawson—85 cents mileage, $4.00 for one day's attendance	4.85	
	Otis Augustus Rosboro for one day's attendance	4.00	
	Albert B. Mojonnier—$2.25 mileage, $4.00 for one day's attendance (May 23, 1955.)	6.25	
	Albert B. Mojonnier—$2.25 mileage, $4.00 for one day's attendance (May 24, 1955.)	6.25	
222	Albert B. Mojonnier — $2.10 mileage, $4.00 for one day's attendance at deposition taken December 6, 1954 on behalf of these defendants	6.10	63.95

4.	Roy E. Fuller, court reporter, for transcript of proceedings of March 22, 1955	10.80	
	Roy E. Fuller, court reporter, for transcript of proceedings of March 25, 1955	7.20	
	Roy E. Fuller, court reporter, for transcript of proceedings of April 14, 1955	10.80	28.80
5.	Roy E. Fuller, court reporter, for transcript of trial proceedings (being ¼ of cost of transcript furnished for use of Court, and ½ of cost of one copy furnished for use of defendants' counsel) from beginning of trial to end of plaintiff's prima facie case	1,288.00	
	Roy E. Fuller, court reporter, for transcript of trial proceedings (being ½ of cost of transcript furnished for use of Court, and cost of one copy of transcript for use of defendants' counsel) from beginning of defendants, proofs to close of case	1,939.20	3,227.20
6.	Leon M. Golding and Associates, Chicago, Illinois, court reporters, for copy of partial transcript of deposition of Albert B. Mojonnier taken April 22, 1955 in Chicago, Illinois on behalf of defendants, 58 pages at 40 cents each	23.20	
	Roy E. Fuller, court reporter, for attendance $48.00 and copy of transcript of depositions (241 pages) $289.20 of depositions of Jack B. Richardson and Maurice J. Brasile taken in Chicago, Illinois on behalf of plaintiff on April 15, 1955 and April 18, 1955, respectively	337.20	
			$360.40

	Leon M. Golding and Associates, Chicago, Illinois, court reporters, for attendance $40. and transcript (169 pages—original and one copy) $177.45, of deposition of Albert B. Mojonnier taken in Chicago, Illinois December 6, 7 and 8, 1954, on behalf of Brasile Group defendants	$217.45	
	Synnestvedt & Lechner, Philadelphia, Pennsylvania, for court reporter's charge for attendance at and transcription of deposition of Khoren C. Melikian at Philadelphia, Pennsylvania April 29, 1955 on behalf of Brasile Group defendants	112.35	690.20
7.	U. S. Patent Office for certified copy of file history of Mojonnier Patent No. 2,667,990 (Defendants' Exhibit No. 7)	21.70	
	U. S. Patent Office for certified copy of file history of Mojonnier Reissue Patent No. 23,830 (Defendants' Exhibit No. 8)	15.00	
	U. S. Patent Office for copies of ten patents cited in original Patent No. 2,667,990 and Re-issue Patent No. 23,830, at 25 cents each	2.50	39.20
8.	Rapid Copy Service, Inc., Chicago, Illinois, for preparation of giant photostats and copies thereof for large charts (Defendants' Exhibits Nos. 9, 11, 45, 46, 47)	148.95	
	Ralph Burkhardt, Chicago, Illinois, draftsman's charges for coloring and lettering large charts (Defendants' Exhibits Nos. 9, 11, 45, 46, 47)	35.00	183.95

9.	Rapid Copy Service, Inc., Chicago, Illinois, for photostatic copies of charts included in appendix to brief of Brasile Group defendants	6.20	
	Ralph Burkhardt, Chicago, Illinois, draftsman's charges for coloring and lettering charts included in appendix to brief of Brasile Group defendants	25.00	31.20
224	10. Rapid Copy Service, Inc., Chicago, Illinois, for one photostatic negative (.60) and one positive (.50) of each of the following Exhibits of Brasile Group defendants: 19, 20, 25 (2 pages), 27 (23 pages), 28 (2 pages), 34, 35, 36, 37 (2 pages), 38, 39, 62 (2 pages), 63 (2 pages), 64, 66, 67, 77, 78, 79		50.60
	Total		$4,342.60

United States of America,
Northern District of Illinois,
Eastern Division
County of Cook } ss.

Richard E. Voland, being duly sworn, deposes and says:

1. He is one of the attorneys for the Brasile Group defendants in the above-entitled cause, and as such is better informed as to the above costs and disbursements than the said Brasile Group defendants.
2. The items contained in the above Bill of Costs are correct to the best of his knowledge and belief.
3. The said disbursements have been necessarily incurred in the said cause.
4. The services for which fees are charged therein have been actually and necessarily performed.

Richard E. Voland

Subscribed and sworn to before me this 26th day of April, 1956.

Edith Johnson,
Notary Public.

225 IN THE UNITED STATES DISTRICT COURT.
• • (Caption—54-C-277) • •

TAXATION OF COSTS

I hereby tax the costs of the Brasile Group defendants at the sum of Four thousand, three hundred forty-two dollars and sixty cents, ($4,342.60).

Roy H. Johnson,
Clerk.

May 3, 1956.

226 And on the same day to wit, the 3rd day of May, 1956 came the U. S. Filler Equipment, Inc., et al., (The Lewis Group) defendants, by their attorneys and filed in the Clerk's office of said Court their certain Petition, for Taxing Costs, Bill of Costs, Affidavit, Certificate of Service and Taxation of Costs, in words and figures following, to wit:

227 IN THE UNITED STATES DISTRICT COURT.

* * (Caption—54-C-277) * *

PETITION FOR TAXING OF COSTS.

Now come U. S. Filler Equipment, Inc., U. S. Carton Forming Corporation, Paper Pack Corporation, Pack Equipment Corporation and Albert A. Lewis (the Lewis Group defendants), defendants herein, by Louis Bernat and W. M. Van Sciver, their attorneys, and petition this Court for the taxing of their costs of suit herein, and in support of their petition say:

That in the preparation and trial of this case petitioners have paid or have incurred expenses in the amount of $2,312.05, all of which are itemized in "Exhibit A" attached hereto and made a part of this petition, and that such items of expense are properly taxable as costs herein.

228 Wherefore, petitioners ask that the sum of $2,312.05 be taxed against plaintiff as the costs of said defendants herein.

U. S. Filler Equipment, Inc.,
U. S. Carton Forming Corporation.
Paper Pack Corporation.
Pack Equipment Corporation.
Albert A. Lewis.
By Louis Bernat,
W. M. Van Sciver,
Their Attorneys.

229 Exhibit A.

IN THE UNITED STATES DISTRICT COURT.
* * (Caption—54-C-277) * *

BILL OF COSTS.

1.	Attorney's Docket Fee (U.S.C. Sec. 1923)	$ 20.00
2.	Paid to Roy E. Fuller for transcript of portion of hearing held on September 21, 1954.	9.80
3.	Paid to Leon M. Golding & Associates for copy of transcript of deposition of Albert B. Mojonnier taken December 6, 7 and 8, 1954 by Brasile Group Defendants.	67.60
4.	Paid to Elizabeth H. Preston for copy of transcript of deposition of Carl F. Allen taken on April 8, 1955 by Plaintiff at West Monroe, Louisiana.	19.25
5.	Deposition of Carl F. Allen admitted into evidence.	2.50
6.	Paid to Jessalynn Burke for copy of transcript of deposition of Frank G. Brooks taken on April 7, 1955 by Plaintiff at Joplin, Missouri.	20.55
7.	Deposition of Frank G. Brooks admitted into evidence.	2.50
8.	Paid to Leon M. Golding & Associates for attendance at and preparation of transcript of depositions of: Albert A. Lewis taken April 18, 1955 by plaintiff; and Albert B. Mojonnier taken April 22, 1955 by Lewis Group Defendants.	97.10 215.25
230 9.	Paid to Roy E. Fuller for copy of transcript of depositions of Jack B. Richardson and Maurice J. Brasile taken by Plaintiff on April 15, 1955.	144.60
10.	Paid to Roy E. Fuller for Portion of Original Stenographic Report Necessarily Obtained for Use in the Case (U.S.C. Sec. 1920).	1,288.00
11.	Paid to Trade-Mark Service Corporation for trade-mark search re Electromatic charged to be infringed by Plaintiff.	15.00

12.	Paid to Thelma E. Bonini for copy of File History of Mojonnier Patent 2,667,990, including cost of references cited therein.		22.90
13.	Paid to Samuel B. Lebowitz in Washington, D. C. for services rendered in validity search on Mojonnier Patent 2,667,990, April 22, 1954.		112.50
14.	Paid to Thelma E. Bonini for copy of File History of Mojonnier Reissue Patent 23,830, including cost of references cited therein.		8.85
15.	Paid to Samuel B. Lebowitz in Washington, D. C. for services rendered in validity search on Mojonnier Reissue Patent No. 23,830, including costs, December 17, 1954.		106.25
16.	Paid to Samuel B. Lebowitz in Washington, D. C. for services rendered in extension of validity search on Mojonnier patent Re. 23,830, including costs, March 23, 1955		101.50
17.	Paid for copies of papers necessarily obtained for use in the Trial of the Case: 22 copies of patents that were offered in evidence at the trial and to be used at the trial.		5.50
18.	Paid to the Huey Company and Chicago Blue Print Company for photostatic copies of patents required for use in the trial of the case; and exhibits identified in depositions and affidavits.		22.40
231 19.	Witness Fees: Fees of Albert A. Lewis called as a witness by the Plaintiff.		
	Four days at $4.00	$16.00	
	Milage at 7¢ per mile for each days attendance	14.00	
	Total		$2,312.05

Affidavit.

State of Illinois, }
County of Cook. } ss.

Louis Bernat, being duly sworn, says:

1. That the foregoing items of cost charged as disbursements have actually been paid and were necessary and are reasonable in amount;
2. That the witness above named was made to attend by the Plaintiff and that he traveled the number of miles and actually attended the number of days specified; and
3. That the copies of papers charged for were actually and necessarily and in good faith obtained for use at the trial.

Louis Bernat.

Subscribed and sworn to before me this 26th day of April, 1956.

Frances L. Weibel,
Notary Public.

232 IN THE UNITED STATES DISTRICT COURT.

* * (Caption—54-C-277) * *

CERTIFICATE OF SERVICE.

Copies of the foregoing Petition for Taxing of Costs and Bill of Costs have been served on the parties hereafter named by mailing copies of said Petition and Bill of Costs by regular mail, postage prepaid, to their respective addresses, as hereafter stated, on the 26th day of April, 1956.

By Louis Bernat,
Attorney for the Lewis Group Defendants.

Copies Mailed to:

Mr. Richard E. Voland,
Defrees, Fiske, O'Brien & Thompson,
105 South LaSalle Street,
Chicago 3, Illinois.
Wilkinson, Huxley, Byron & Hume,
38 South Dearborn Street,
Chicago, Illinois.
Mr. John F. McCanna,
408 South Oak Park Blvd.,
Oak Park, Illinois,
Wright & Wright,
11 South LaSalle Street,
Chicago, Illinois.

233 IN THE UNITED STATES DISTRICT COURT.

* * (Caption—54-C-277) * *

TAXATION OF COSTS.

I hereby tax the costs of the defendants, U. S. Filler Equipment, Inc., et al., (the Lewis Group defendants), at the sum of Two thousand, two hundred ninety-two dollars and five cents ($2,292.05). Item 1, Attorney's docket fee, $20.00, being disallowed as a duplication of Item 1 on the cost bill of the Brasile Group, defendants.

Roy H. Johnson,
May 3, 1956. *Clerk.*

* * * * *

237 And afterwards, to wit, on the 5th day of June, 1956, being one of the days of the regular June term of said Court, in the record of proceedings thereof, in said entitled cause, before the Honorable John P. Barnes, District Judge, appears the following entry, to wit:

238 IN THE DISTRICT COURT OF THE UNITED STATES.

* * (Caption—54-C-277) * *

ORDER.

This matter coming on further to be heard on the motion of plaintiff to retax the costs heretofore taxed in the above-entitled action by the Clerk of this Couort on May 3, 1956 in favor of the Lewis Group defendants, and the Court having heard the arguments of counsel for the respective parties and being fully advised in the premises;

And counsel for the said Lewis Group defendants in open court having withdrawn the request of said defendants for the taxation of the following items in their Bill of Costs: Item No. 13 in the amount of $112.50; Item No. 15 in the amount of $106.25, and Item No. 16 in the amount of $101.50;

Now, Therefore, It Is Ordered that the Bill of Costs heretofore taxed by the Clerk in favor of said Lewis Group defendants as aforesaid be, and the same is hereby, retaxed and corrected by eliminating therefrom the aforesaid Items numbered 13, 15 and 16, and that said taxation of the costs by the Clerk in respect of the remaining

239 items of said Bill of Costs aggregating $1,971.80 be, and it is hereby, affirmed, and that said sum of $1,971.80 be included as the costs of suit of said Lewis Group defendants in the judgment heretofore entered herein on February 21, 1956.

It Is Further Ordered that should the plaintiff desire to make its appeal from said judgment for costs entered herein on February 21, 1956 in favor of said Lewis Group defendants a supersedeas, it may do so by filing within ten (10) days from the date of this Order, or within such further time as said judgment is unsatisfied and the matter remains before this Court, a supersedeas appeal bond with security and conditions to be approved by this Court in the amount of $2200.

Enter:

John P. Barnes,

Dated, June 5, 1956. *Judge.*

240 IN THE DISTRICT COURT OF THE UNITED STATES.

* * (Caption—54-C-277) * *

ORDER.

This matter coming on further to be heard on the motion of plaintiff to retax the costs heretofore taxed in the above-entitled action by the Clerk of this Court on May 3, 1956 in favor of the Brasile Group defendants, and the Court having heard the arguments of counsel for the respective parties and being fully advised in the premises;

Now, Therefore, It Is Ordered that the said motion of plaintiff to retax the costs of the Brasile Group defendants be, and it is hereby, overruled and denied, and the taxation of costs by the Clerk in favor of said Brasile Group defendants as aforesaid in the amount of $4,342.60 be, and it is hereby, affirmed, and that said sum of $4,342.60 be included as the costs of suit of said Brasile Group defendants in the judgment heretofore entered herein on February 21, 1956.

It Is Further Ordered that should the plaintiff desire to make its appeal from said judgment for costs entered
241 herein on February 21, 1956 in favor of said Brasile Group defendants a supersedeas, it may do so by filing within ten (10) days from the date of this Order, or within such further time as said judgment is unsatisfied and the matter remains before this Court, a supersedeas appeal bond with security and conditions to be approved by this Court in the amount of $4900.

Enter:

John P. Barnes,

Judge.

Dated, June 5, 1956.

* * * * *

256 IN THE UNITED STATES DISTRICT COURT.
* * (Caption—55-C-137) * *

Be It Further Remembered, that on to wit, the 25th day of January, 1955, the above-entitled action was commenced by the filing of the Complaint in the office of the Clerk of the United States District Court for the Northern District of Illinois, Eastern Division, in words and figures following, to wit:

257 IN THE UNITED STATES DISTRICT COURT.
* * (Caption—55-C-137) * *

COMPLAINT AT LAW.

Now comes the plaintiff, Julius A. Zinn, Jr., and complaining of the defendants, Albert B. Mojonnier and The Mojonnier Dawson Company, a corporation, says:

Count I.

1. That this action is brought under and is based on Title 35, U. S. Code, Section 256, July 19, 1952, Chapter 950, Section 1, 66 Stat. 810, and that jurisdiction of this Court arises from an action brought under the Constitution or statutes of the United States.
2. That the plaintiff, Julius A. Zinn, Jr., is an inventor of certain paper containers and packages, suitable for the packaging of milk, liquids, and other products, and is the inventor of other related machines and equipment for the packaging of other products.
3. That the defendant, Albert B. Mojonnier, was employed by Mojonnier Brothers Company, a corporation, until the 31st day of January, 1946; that in 1946 the defendant, Albert B. Mojonnier, formed his own company or became associated with others in the formation of a company, The Mojonnier Dawson Company, a corporation, a defendant herein.
4. That United States Letters Patent No. 2,667,990 were issued on February 2, 1954, to Albert B. Mojonnier, defendant, as the inventor and applicant therefor, and to The Mojonnier Dawson Company, defendant, as the as-

signee; that said Letters Patent No. 2,667,990 were reissued on May 18, 1954, as Reissue Patent No. 23,830.

258 5. That plaintiff, Julius A. Zinn, Jr., was a co-inventor of the invention upon which United States Letters Patent No. 2,667,990 were issued, and reissued as Reissue Patent No. 23,830, to defendant, Albert B. Mojonnier, as the inventor, and to defendant, The Mojonnier Dawson Company, as assignee, and such issuance and reissuance of said Letters Patent, without naming plaintiff, Julius A. Zinn, Jr., as co-inventor, has and continues to deprive plaintiff of his just property and patent rights, and has and continues to result in the unjust enrichment of the defendants by their exercise of exclusive control over the property of the patents and the profits derived therefrom, to the exclusion of plaintiff.

6. That Julius A. Zinn, Jr., plaintiff, was omitted by error and without deceptive intention on his part in the issuance of Letters Patent No. 2,667,990, reissued as Reissue Patent No. 23,830, although plaintiff, Julius A. Zinn, Jr., was a joint inventor thereof, and that prior to the filing of this complaint, and immediately upon learning of the issuance of said Letters Patent demand was made upon defendants, Albert B. Mojonnier and The Mojonnier Dawson Company, to join in correcting the error so as to show plaintiff as co-inventor, and for an accounting, and defendants, Albert B. Mojonnier and The Mojonnier Dawson Company, have refused and continue to refuse to join in an application with the plaintiff, Julius A. Zinn, Jr., to the Commissioner of Patents to issue a certificate adding to United States Letters Patent No. 2,667,990, reissued as Reissue Patent No. 23,830, the name of Julius A. Zinn, Jr., the plaintiff herein, as a joint inventor.

Wherefore, the plaintiff, Julius A. Zinn, Jr., prays that this Court may order correction of United States Letters Patent No. 2,667,990, reissued as Reissue Patent No. 23,830, on notice and hearing of all the parties concerned, and shall order the Commissioner of Patents to issue a certificate adding the name of Julius A. Zinn, Jr., to the patent as a joint inventor, as set forth in Title 35, U. S. Code, Section 256.

259 Count II—In Chancery.

1. That plaintiff, Julius A. Zinn, Jr., adopts and realleges as though fully set out paragraphs 1, 2, 3, 4, 5 and 6 of Count I, as paragraphs 1, 2, 3, 4. 5 and 6, respectively of Count II.

7. That defendant, Albert B. Mojonnier, is the patentee of United States Letters Patent No. 2,667,990, reissued as reissue Patent No. 23,830, and that defendant, The Mojonnier Dawson Company, a corporation, is the assignee under said Letters Patent of the patentee, Albert B. Mojonnier, and that if defendants, or any of them, alienate, assign, transfer or encumber their interest in United States Letters Patent No. 2,667,990, reissued as Reissue Patent No. 23,830, during the pendency of this suit, plaintiff, Julius A. Zinn, Jr., will suffer irreparable damages in the acts sought to be enjoined, without adequate remedy at law therefor.

8. That defendants, Albert B. Mojonnier and The Mojonnier Dawson Company, have exercised, and continue to exercise, complete dominion over and control of the name "Electromatic," which name was originally coined by plaintiff, Julius A. Zinn, Jr., as being descriptive of the machine constituting the invention covered by United States Letters Patent No. 2,667,990, reissued as Reissue Patent No. 23,830, and as a part of plaintiff's contribution in working with defendant, Albert B. Mojonnier, in the development of said invention; that the defendants have publicized said name, "Electromatic," as being their exclusive property and have failed and refused to acknowledge the property interest of plaintiff in said name and have, upon information and belief, filed an application to register said name as the trade-mark of one or both of said defendants, and that if defendants, or any of them, alienate, assign, transfer or encumber their interest in said name, "Electromatic," during the pendency of this suit, plaintiff will suffer irreparable damages in the acts sough to be enjoined, without adequate remedy at law therefor.

260 9. Upon information and belief, defendants, Albert B. Mojonnier and The Mojonnier Dawson Company, a corporation, have collected, and continue to collect, large sums of money, the amount of which is not known to plaintiff, from the sale of machines and equipment produced by

and under the authority arising out of the application and procurement of United States Letters Patent No. 2,667,990, reissued as Reissue Patent No. 23,830; that plaintiff, Julius A. Zinn, Jr., has been and is now deprived of his just property and patent rights by reason of the exercise of exclusive control over the property in the patents and the profits derived therefrom by defendants herein, to the exclusion of plaintiff; that defendants, Albert B. Mojonnier and The Mojonnier Dawson Company, and both of them, have been unjustly enriched by their exclusive control, to the exclusion of plaintiff, over the property in the patents and profits derived therefrom, and that plaintiff, Julius A. Zinn, Jr., by reason of his joint invention of the subject matter of United States Letters Patent No. 2,667,990, reissued as Reissue Patent No. 23,830, is entitled to an equitable share in said patents and the profits derived therefrom; that heretofore and prior to the commencement of this action plaintiff demanded of defendants that they account for their acts in this regard and pay over to plaintiff the amounts due plaintiff out of the profits as aforesaid, which defendants have failed and refused to do.

10. That plaintiff has no adequate remedy at law.

Wherefore, plaintiff prays:

1. That the defendant, Albert B. Mojonnier, and the defendant, The Mojonnier Dawson Company, a corporation, its agents and servants, and each of them, be enjoined and restrained during the pendency of this action from alienating, assigning, transferring or encumbering their interests in United States Letters Patent No. 2,667,990, reissued as Reissue Patent No. 23,830, and their interest in the trade name "Electromatic," and that each of them be restrained during the pendency of this action from alienating, assigning, transferring or encumbering any assets other than in the regular course of business.

261 2. That the defendants, and each of them, account to plaintiff for all monies and property received by the defendants, and each of them, arising from the sale of machinery and equipment patented by United States Letters Patent No. 2,667,990, reissued as Reissue Patent No. 23,830, and that plaintiff have judgment against defendants for any sums determined to be due plaintiff from defendants.

3. That plaintiff have judgment against defendants, declaring plaintiff's interest in the trade name "Electro-

matic," as such interest shall be determined, and that defendants be required to name plaintiff in any application for registration of said name as a trade-mark, or in the alternative, that defendants be required to assign the just interest of plaintiff in said name to plaintiff.

4. For such other or further relief as may be just, and the awarding to plaintiff of his costs and disbursements in this action.

Julius A. Zinn, Jr.,
Plaintiff.

Wright & Wright,
11 South LaSalle Street,
Chicago 3, Illinois,
FRanklin 2-7383,
Attorneys for Plaintiff.

State of Illinois, } ss.
County of Cook. }

Julius A. Zinn, Jr., being first duly sworn, deposes and says that he is the plaintiff in the above-entitled cause; that he has read the foregoing Complaint, knows the contents thereof, and that the same are true, except where pleading is upon information and belief, and in such case he believes the statements are true.

Julius A. Zinn, Jr.

Subscribed and sworn to before me this 25th day of January, A. D. 1955.

Lila R. Davies,
(Seal) *Notary Public.*

Endorsed: In the United States District Court * * (Caption—55-C-137) * * Complaint at Law and in Chancery. Roy H. Johnson, Clerk.

263 And afterwards, to wit, on the 28th day of February, 1955, being one of the days of the regular February term of said Court, in the record of proceedings thereof, in said entitled cause No. 55-C-137, before the Honorable John P. Barnes, District Judge, appears the following entry, to wit:

264 IN THE UNITED STATES DISTRICT COURT.

* * (Caption—55-C-137) * *

This cause coming on for return of the rule on the parties to show why causes should not be consolidated come the parties by their counsel and it is

Ordered that said rule be and it hereby is made absolute and cause No. 54-C-277—The Mojonnier Dawson Co. *vs.* U. S. Dairies Sales Corp., et al., and cause No. 55-C-137—Julius A. Zinn, Jr. *vs.* Albert B. Mojonnier, et al. be and the same hereby are consolidated, said consolidated causes to proceed under the title and number of the lower-numbered cause as follows: Consolidated Cause No. 54-C-277—The Mojonnier Dawson Co. *vs.* U. S. Dairies Sales Corp., et al.

* * * * *

267 And on the same day to wit, on the 1st day of March, 1955, being one of the days of the regular February term of said Court, in the record of proceedings thereof, in said entitled cause No. 55-C-137 before the Honorable John P. Barnes, District Judge, appears the following entry, to wit:

268 IN THE UNITED STATES DISTRICT COURT.

* * (Caption—55-C-137) * *

Pursuant to memorandum of Honorable John P. Barnes of this Court, filed herein this day it is

Ordered that Count II of the complaint be and the same hereby is dismissed for lack of jurisdiction and that all reference to "accounting" and "unjust enrichment" be and the same hereby is stricken from Count I of the complaint.

269 And afterwards on, to wit, the 10th day of March, 1955 came the Defendants, Albert B. Mojonnier and The Mojonnier Dawson Company, by their attorneys, and filed in the Clerk's office of said Court their certain Answer and Counterclaim (No. 55-C-137) in words and figures following, to wit:

270 IN THE UNITED STATES DISTRICT COURT.

* * (Caption—54-C-277) * *

ANSWER (55-C-137) OF DEFENDANTS ALBERT B. MOJONNIER AND THE MOJONNIER DAWSON COMPANY AND COUNTERCLAIM OF SAID DEFENDANTS.

Answer.

Defendants, Albert B. Mojonnier and The Mojonnier Dawson Company, for answer to the complaint of plaintiff, Julius A. Zinn, Jr., by their attorneys, McCanna & Morsbach, say:

1. Defendants admit the jurisdiction of this Court under Title 35, U. S. Code, Section 256, with respect to the allegation of co-inventor, but deny jurisdiction for any other reason and deny any Constitutional jurisdiction.

2. Defendants deny each and every allegation of paragraph 2 of the Complaint.

3. Answering paragraph 3 of the Complaint, defendant Albert B. Mojonnier admits that he was employed by Mojonnier Brothers Company, a corporation, prior to February 1, 1946, and that he became associated with others in the formation of The Mojonnier Dawson Company,
271 a corporation, defendant herein.

4. Defendants admit that United States Letters Patent No. 2,667,990 were issued on February 2, 1954 to Albert B. Mojonnier, defendant, as the inventor and applicant therefor, and to The Mojonnier Dawson Company, defendant, as the assignee; and that said Letters Patent No. 2,667,990 were reissued on May 18, 1954, as Reissue Patent No. 23,830, alleged in paragraph 4 of the Complaint.

5. Defendants deny each and every allegation of paragraph 5 of the Complaint, but defendants admit that Letters Patent No. 2,667,990 were issued, and reissued as Reissue Patent No. 23830 to defendant Albert B. Mojonnier

as the inventor, and to defendant The Mojonnier Dawson Company, as assignee, as alleged in paragraph 5 of the Complaint.

6. Defendants deny each and every allegation of paragraph 6 of the Complaint.

7. Defendants deny plaintiff's demand for a jury and deny that the Complaint sets forth a cause of action of any issue triable of right by a jury, but aver that this is an equity cause directly related to the action in equity No. 54-C-277 with which the present action is consolidated, that the present claim of co-inventor involves a matter of reformation of Reissue Patent No. 23,830, and that this is a statutory matter involving determinations of technical matters created by Federal Statute, and also involving the issuance of an order by this Court in the nature of an injunctive order.

8. Defendants deny that they have individually or jointly in any way committed any wrongful act or failure to act or that they have engaged in any illegal or deceptive course of conduct alleged in the Complaint, and deny that plaintiff is entitled to the relief prayed for in the Complaint, or for an accounting, or for unjust enrichment, or any relief whatsoever against defendants by way of
272 injunction, order of this Honorable Court under Title 35, U. S. Code, Section 256, or otherwise.

Counterclaim.

Further answering and by way of Counterclaim, defendant The Mojonnier Dawson Company (counterclaim plaintiff herein) states:

I.

That the jurisdiction of this Honorable Court in respect to the following Counterclaim is based on the fact that this is an action arising under the patent laws of the United States, and jurisdiction of this Court is based on Title 28, U. S. Code, Section 1338.

II.

Counterclaim defendant, Julius A. Zinn, Jr. is a resident and inhabitant of the Northern District of Illinois, Eastern Division, residing at 415 Fullerton Parkway, Chicago, Illinois, and maintaining an office and place of business at 520 North Michigan Avenue, Chicago, Illinois.

III.

On February 2, 1954, United States Letters Patent No. 2,667,990 were duly and legally issued to counterclaim plaintiff for an invention of Albert B. Mojonnier, entitled Dispensing Mechanism with Time Controlled Flow, and on May 18, 1954 said Letters Patent No. 2,667,990 were duly and legally reissued to counterclaim plaintiff as Reissue Patent No. 23,830, and said Letters Patent No. 2,667,990 were surrendered, and counterclaim plaintiff ever since
273 has been and now is the sole owner and holder of said Reissue Letters Patent and of all rights of recovery thereunder.

IV.

Counterclaim plaintiff has for many years last past manufactured and sold filling apparatus commonly known as "fillers" and "filler machines" embodying the inventions of said Letters Patent, and particularly fillers designed for filling free flowing fluids into cartons and containers in the dairy industry and also in the aerosol industry.

V.

Counterclaim plaintiff is informed and believes that said Julius A. Zinn, Jr., counterclaim defendant herein, has subsequent to the date of issuance of said Letters Patent infringed said Letters Patent within this District and elsewhere by either manufacturing or selling or offering to sell fillers embodying the inventions described in said Letters Patent, which infringing fillers are substantially copied from counterclaim plaintiff's fillers, and said infringement by said Julius A. Zinn, Jr. has been deliberate and wilful and without the consent of counterclaim plaintiff, and such infringement will continue unless said Julius A. Zinn, Jr. is enjoined by this Court.

VI.

That Julius A. Zinn, Jr. has for years collaborated with Maurice J. Brasile and other defendants in Civil Action No. 54-C-277, in conspiring to use the filler invention owned by counterclaim plaintiff and covered in the Mojonnier
274 Reissue Patent No. 23,830, and said collaboration has involved the making of experimental filler-closer-sealer machines utilizing said Mojonnier filler invention for

contemplated manufacture, use and sale without the consent of counterclaim plaintiff and well knowing of counterclaim plaintiff's patent rights in said filler and in violation of said rights.

VII.

More particularly, counterclaim plaintiff says that Julius A. Zinn, Jr. had nothing whatsoever to do with the conception or making of the invention disclosed and claimed in United States Letters Patent No. 2,667,990 and the reissue thereof No. 23,830, in the name of the inventor Albert B. Mojonnier, or in the experimentation or development of the said invention, nor did said Julius A. Zinn, Jr. at any time work with said Albert B. Mojonnier or contribute anything to the work of said Albert B. Mojonnier in his conception and reduction to practice of the said invention; but on the contrary, counterclaim plaintiff states the facts to be that the said invention was conceived solely by said Albert B. Mojonnier and developed and reduced to practice solely by him while he was in the employ of The Mojonnier Dawson Company, and such conception and development involved problems that required experimentation over a considerable period of time; that said Albert B. Mojonnier's first conception of said invention was for use in filling syrup into containers which had been previously filled in part with coarsely cut-up fruit; that later said Albert B. Mojonnier made an experimental filler which was first tested under actual commercial conditions at the Bowman Dairy Company, Chicago, Illinois, under the personal supervision of said Albert B. Mojonnier and in furtherance of his own conception and ideas in perfecting the invention; that
275 all of said work and effort of Albert B. Mojonnier was done at the cost and expense of the Mojonnier Dawson Company, and said Julius A. Zinn, Jr. had nothing whatsoever to do with this; that the filler for Bowman Dairy Company was designed by said Albert B. Mojonnier for filling whipping cream into cans which were subsequently pressurized by nitrous oxide for the production of self-contained cans from which the user extracts whipped cream; that said Albert B. Mojonnier then applied the filler he had invented to the filling of a wide variety of products and to various types of containers, among which was an application to the filling of various types of refrigerated liquids including the filling of freon into cans, commonly known as low pressure aerosol bombs; and that these ap-

plications have gone into general use in the aerosol industry in the United States and in foreign countries; that said Albert B. Mojonnier then applied the filler he had invented to the filling of paper cartons for milk, among which were the "Zinpak" carton, made under patents taken out in the name of Julius A. Zinn, Jr., the "Canco" carton made by American Can Company, the "Pure-pak" carton made by Ex-cell-O Corporation of Detroit, Michigan, the "Sealking" carton made by Sealright Co. Inc., the "Ilreco" carton made by Illinois Creamery Supply Company, and the "Perga" carton made by Continental Can Company; that all of this involved enterprise carried on under the sole direction of Albert B. Mojonnier on behalf of counterclaim plaintiff; that all of these applications of the Mojonnier filler have been commercially successful except the application to the "Zinpak" carton which failed because this carton did not meet the requirements of dairies and was not produced in satisfactory quality or quantity; that the relationship between Julius A. Zinn, Jr. and Albert B. Mojonnier was only in the application of the Mojonnier filler to a combined filling, closing, and sealing machine, 276 in which the Mojonnier "filler" was used with a "closer-sealer" unit, and this machine was known as a "filler-sealer"; that at no time did Albert B. Mojonnier or the Mojonnier Dawson Company make any agreement of any kind with Julius A. Zinn, Jr. with respect to the manufacture, use or sale of the Mojonnier filler but the Mojonnier Dawson Company did make available to the dairy trade through sales outlets, including the Illinois Creamery Supply Company, the abovementioned adaptation of the Mojonnier filler as applied in said "filler-sealer"; that this enterprise of manufacturing and selling said "filler-sealer" was a complete failure because of the failure of the "Zinpak" carton to meet the dairy requirements and, as above stated, said Julius A. Zinn, Jr. failed to produce said "Zinpak" cartons in satisfactory quality or quantity; that said Julius A. Zinn, Jr. was the principal in said "Zinpak" carton activity and in the promotion thereof he used an Illinois corporation, namely, Zinpak Corporation, having its office at 520 North Michigan Avenue, Chicago, Illinois; that in consequence of said promotion by said Julius A. Zinn, Jr., the Zinpak Corporation went into bankruptcy, and is now a bankrupt in this Court, No. 53-B-1765; that as a consequence of the failure of said Julius A. Zinn, Jr. in his promotion of said "Zinpak" car-

tons, the Mojonnier-Dawson Company suffered severe losses exceeding $100,000.00, was forced to enter into an extension agreement with creditors in order to avoid bankruptcy, was severely damaged in its credit rating and in its standing in the trade, and the operations of the Company were adversely affected over a period of nearly four years; that in order to prevent the Mojonnier Dawson Company from going into bankruptcy under the circumstances above stated, Mr. and Mrs. Albert B. Mojonnier mortgaged their home and borrowed to the limit of their ability on their personal credit, using the proceeds of
277 this borrowing to finance operations of the Mojonnier-Dawson Company, and eventually all creditors were paid in full on their accounts; that on information and belief many other individuals and companies suffered severe and large losses on account of the conduct and acts of said Julius A. Zinn, Jr. in said "Zinpak" promotion, and the total combined losses would be in excess of $500,000.00; that on information and belief said Julius A. Zinn, Jr. while still in the capacity of a principal of Zinpak Corporation and subsequent to his discharge as President from such corporation, continued to develop a "closer-sealer" machine together with the Mojonnier filler embodying the invention of Reissue patent No. 23,830, and that he has surreptitiously continued and is continuing to this time to promote and exploit said "closer-sealer" together with the said Mojonnier filler invention, all without the consent of counterclaim plaintiff.

VIII.

That said Julius A. Zinn, Jr. has represented through his attorney at a hearing in this action February 14, 1955 and also in depositions of said Julius A. Zinn, Jr. taken January 4, 11, and 21, 1955 in action 54-C-277, in support of his claim of being a co-inventor with Albert B. Mojonnier of the filler invention here in issue, that the benefit of his alleged co-invention accrued to his exclusive licensee, Zinpak Corporation; and counterclaim plaintiff says, on information and belief, that in the relationship of Julius A. Zinn, Jr. with Zinpak Corporation, said Julius A. Zinn, Jr. repeatedly represented to those essentially connected with Zinpak Corporation, statements purported to be facts and which were wholly contradictory to his present claim of being a co-inventor with Albert B. Mojonnier.

278 IX.

That on information and belief, said Julius A. Zinn, Jr. has for many years and prior to the fall of 1946, been most meticulous in reducing to writing and expounding elaborately by written agreements everything involving any patent rights claimed by him, and imposing on all associated with him lengthy and elaborate written agreements and lengthy correspondence magnifying his alleged personal rights, and in all such relationships and particularly when the need and demand for a filler was critical, urgent and essential to the operations of said Zinpak Corporation and when said Julius A. Zinn, Jr. could find no other source of supply for a commercially economical filler for his Zinpak cartons, said Julius A. Zinn, Jr. remained silent and devoid of any acts of inventing or co-inventing in association with Albert B. Mojonnier; and that the sworn testimony of said Julius A. Zinn, Jr. in said depositions before this Court January 4, 11, and 21, 1955 with respect to his alleged disclosures to Albert B. Mojonnier are incredible, false, and a fabrication intended to intimidate said Albert B. Mojonnier and his assignee The Mojonnier Dawson Company into giving him the free use of the Mojonnier filler invention.

X.

That the first written notice given by Julius A. Zinn, Jr. to Albert B. Mojonnier and The Mojonnier Dawson Company, of his claim of co-inventor alleged in the Complaint, was by letter dated August 19, 1954, identified as "Plaintiff's Exhibit 13" in the abovementioned deposition of said Julius A. Zinn, Jr., a photostat copy of which letter is attached hereto.

279 XI.

That on information and belief, said Julius A. Zinn, Jr. by reason of his conduct and acts as set forth in paragraphs V to X, inclusive, of this counterclaim, coupled with the filing of this complaint in Civil Action 55-C-137, and being particularly skilled and having had extensive experience in patent matters involving co-inventors, patent license contracts and rights involving patent matters, has deliberately, unconscionably, falsely, and fraudulently, presented his said claim and filed this complaint.

XII.

That said Julius A. Zinn, Jr. is in this Court with unclean hands.

Wherefore Counterclaim Plaintiff Prays:

1. That Julius A. Zinn, Jr., counterclaim defendant herein, his agents, servants, employees, privies, legal representatives, and assigns, be at first during the pendency of this action and afterwards perpetually enjoined and restrained from:

(a) Further infringement of said Reissue Patent No. 23,830.

(b) Doing any act or thing calculated to induce the belief that said Julius A. Zinn, Jr. is in any way connected with counterclaim plaintiff or its products.

2. That Julius A. Zinn, Jr. be required to account to counterclaim plaintiff for all damages suffered by counterclaim plaintiff by reason of the acts and conduct of said Julius A. Zinn, Jr. hereinabove set forth and by reason of the patent infringement.

280 3. That in view of the deliberate, wilful, and aggravated infringement, said Julius A. Zinn, Jr. be required to pay to counterclaim plaintiff treble damages.

4. That the costs of this action and reasonable attorney's fees be assessed against said Julius A. Zinn, Jr.

5. That counterclaim plaintiff may have such other and further relief as the equities may require and as may to this Court seem meet and just.

The Mojonnier Dawson Company,
By McCanna & Morsbach,
John F. McCanna,
Attorneys for defendants, Albert B. Mojonnier and The Mojonnier Dawson Company, and Attorneys for counterclaim plaintiff,
Room 2300,
20 North Wacker Drive,
Chicago 6, Illinois,
FInancial 6-1677.

Copies of this paper are being sent by first class mail this 10th day of March, 1955, to:

Wilkinson, Huxley, Byron & Hume
38 South Dearborn Street
Chicago 3, Illinois

Defrees, Fiske, O'Brien & Thomson,
105 South La Salle Street
Chicago 3, Illinois

Louis Bernat
135 South La Salle Street
Chicago 3, Illinois

Wright & Wright
11 South La Salle Street
Chicago 3, Illinois

Attorneys for the opposing parties in 54-C-277 and 55-C-137.

John F. McCanna.

281 PLAINTIFF'S EXHIBIT 13-A.

(Letterhead of Julius A. Zinn, Jr.,
Chicago 11, Illinois.)

August 19, 1954

Mr. Albert B. Mojonnier
c/o Mojonnier-Dawson Company
9151 Fullerton Avenue
Franklin Park, Illinois

Registered Mail
Return Receipt Requested

Dear Mr. Mojonnier:

I have just read for the first time United States Letters Patent No. 2-667-990, issued to you and assigned to the Mojonnier-Dawson Company on February 2, 1954, and which Letters Patent was re-issued on May 18, 1954, under No. RE-23830.

Your records should clearly show, as do mine, that the invention covered by the claims set forth in the above stated Letters Patent was the result of our joint efforts. You have not recognized my contributions to or recorded my

equity in the ownership of the invention covered by the claims set forth in the above stated Letters Patent by virtue of your failure to have my signature affixed to the application for this above stated Letters Patent executed and sworn to by you on April 4, 1949.

In fairness to you, I wish to give you this formal notice of my claims on this account, so that you may have an opportunity to adjust this matter with me to a negotiated settlement, provided discussions to this end may be had without undue delay.

You are aware of the fact that any action which I might take to assert my unrecorded equity in the ownership of this patent or any action instituted by me to establish my equity and ownership in this above stated Letters Patent might result in the invalidation of the said Letters Patent.

If we are not able to reach a settlement by informal methods, as I am hereby attempting to do by giving you this notice, you will leave me no alternative but to take such formal action as is available to me to establish my equity in the ownership of this above stated Letters Patent and my right to participate in the management and the profits from the use, sale and manufacture of the invention disclosed and covered by the claims set forth in the Letters Patent in question.

282 PLAINTIFF'S EXHIBIT 13-B.

(Letterhead of Julius A. Zinn, Jr.,
Chicago 11, Illinois.)

Page #2—August 19, 1954
Mr. Albert B. Mojonnier
Franklin Park, Illinois

Your failure to reply to this letter within a period of ten days from receipt thereof shall be construed as a continued failure to give due recognition to my rights, title and interest in the invention disclosed and covered by the above stated Letters Patent, as well as your refusal to negotiate an informal settlement between ourselves.

Yours very truly,

JAZ:mom J. A. Zinn, Jr.

283 And afterwards on, to wit, the 14th day of April, 1955, came the Plaintiff and Counter-defendant, Julius A. Zinn, Jr. by its attorneys and filed in the Clerk's office of said Court its certain Answer to Counterclaim in Consolidated Cause No. 54 C 277 and 55 C 137, in words and figures following, to wit:

284 IN THE UNITED STATES DISTRICT COURT.

* * (Caption—54-C-277) * *

ANSWER TO COUNTERCLAIM.

Now comes the plaintiff and counter-defendant, Julius A. Zinn, Jr., by Frank J. Wright of Wright & Wright, his attorneys, and for answer to the defendants' counterclaim filed herein says:

1. The counter-defendant admits the allegations contained in Paragraph 1 of counter-plaintiffs' counterclaim.

2. The counter-defendant admits the allegations contained in Paragraph 2 of counter-plaintiffs' counterclaim.

3. The counter-defendant admits that on February 2, 1954, United States Letters Patent No. 2,667,990 were issued to the counter-plaintiffs, and admits that on May 18, 1954, said Letters Patent No. 2,667,990 were reissued to counter-plaintiffs as Reissue Patent No. 23,830, and that said
285 Letters Patent No. 2,667,990 were surrendered; the counter-defendant denies each and every other allegation contained in counter-plaintiffs' counterclaim, Paragraph 3.

4. The counter-defendant says that he has insufficient knowledge upon which to base a belief as to the truth or falsity of the allegations contained in Paragraph 4 of the counter-plaintiffs' counterclaim, and therefore he denies the same and demands strict proof thereof.

5. The counter-defendant denies each and every allegation of Paragraph 5 of counter-plaintiffs' counterclaim.

6. The counter-defendant denies each and every allegation of Paragraph 6 of counter-plaintiffs' counterclaim.

7. The counter-defendant admits that the Zinpak Corporation went into bankruptcy and is now a bankrupt in the United States District Court, Northern District of Illinois, Eastern Division; the counter-defendant says that he has insufficient knowledge upon which to base a belief as to the truth or falsity of the other allegations contained in counter-plaintiffs' counterclaim, Paragraph 7, and therefore he denies the same and demands strict proof thereof.

8. The counter-defendant admits that he replied through his attorney at a hearing in this action on February 14, 1955, and also in depositions of said counter-defendant,
286 Julius A. Zinn, Jr., taken on January 4, 11 and 21, 1955, in action No. 55 C 277, United States District Court, Northern District of Illinois, Eastern Division, that the counter-defendant, Julius A. Zinn, Jr., is a co-inventor and co-owner of the patents in question; the counter-defendant denies each and every other allegation contained in Paragraph 8 of counter-plaintiffs' counterclaim.

9. The counter-defendant denies each and every allegation contained in Paragraph 9 of counter-plaintiffs' counterclaim.

10. The counter-defendant denies each and every allegation contained in Paragraph 10 of counter-plaintiffs' counterclaim.

11. The counter-defendant denies each and every allegation contained in Paragraph 11 of counter-plaintiffs' counterclaim.

12. The counter-defendant denies each and every allegation contained in Paragraph 12 of counter-plaintiffs' counterclaim.

Wherefore, the counter-defendant denies that the counter-plaintiffs are entitled to any equitable relief, and further says that the counter-plaintiffs are not entitled to any accounting, money damages, treble money damages, any
287 costs or reasonable attorney's fees, or any other or further relief; and the counter-defendant prays that costs and reasonable attorney's fees incurred by the counter-defendant in this counterclaim be assessed against the counter-plaintiffs, since the counterclaim of the counter-plaintiffs is unfounded in law and fact, and is a deliberate, willful, unfounded and dilatory tactic.

Wright & Wright,
Frank J. Wright,
Attorneys for Plaintiff and Counter-Defendant.

288 And on, to wit, the 27th day of March, 1956, there was filed in the Clerk's office of said Court a certain Transcript of Proceedings Had Upon the Hearing of Oral Argument on September 19, 1955, before the Honorable John P. Barnes, Chief Judge of Said Court, in words and figures following, to wit:

* * * * *

Note

Following are blank pages:

1225, 1227, 1229
1231, 1239, 1241
1243, 1246, 1254

1226

Feb. 2, 1954 A. B. MOJONNIER 2,667,990

DISPENSING MECHANISM WITH TIME CONTROLLED FLOW

Filed April 4, 1949 4 Sheets-Sheet 1

Fig. 1

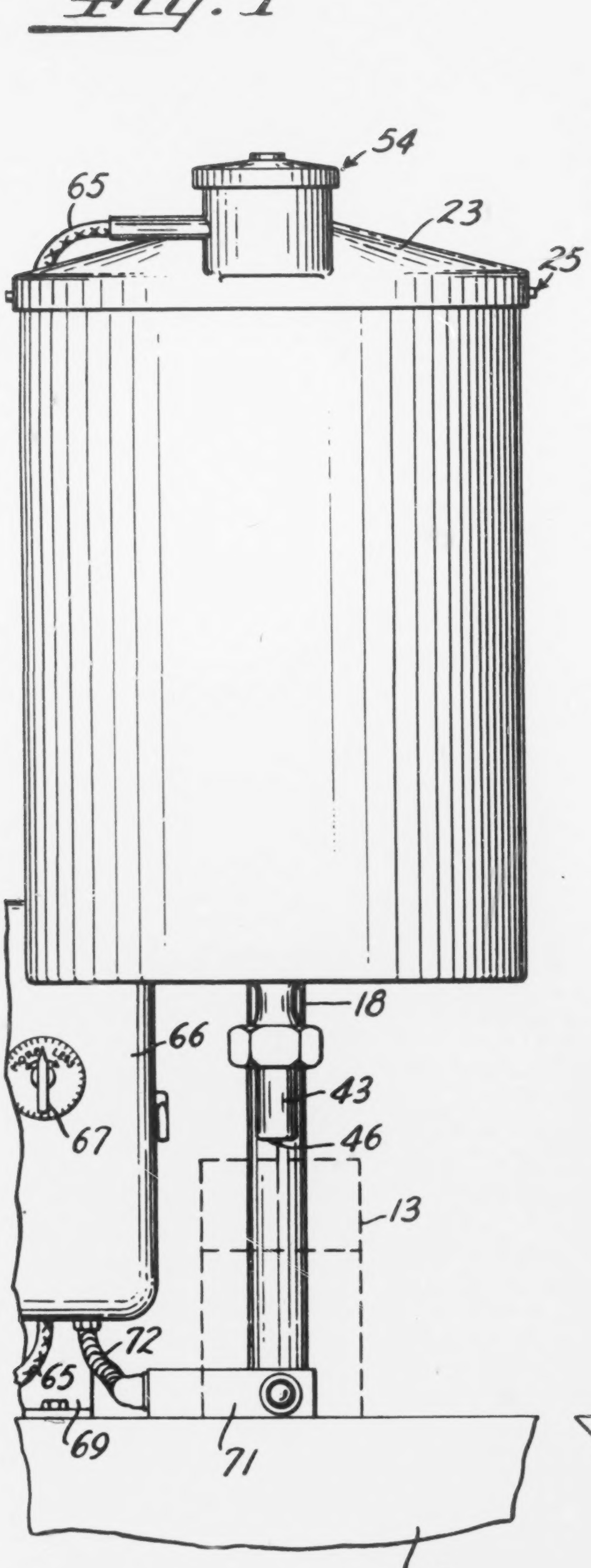

Fig. 2

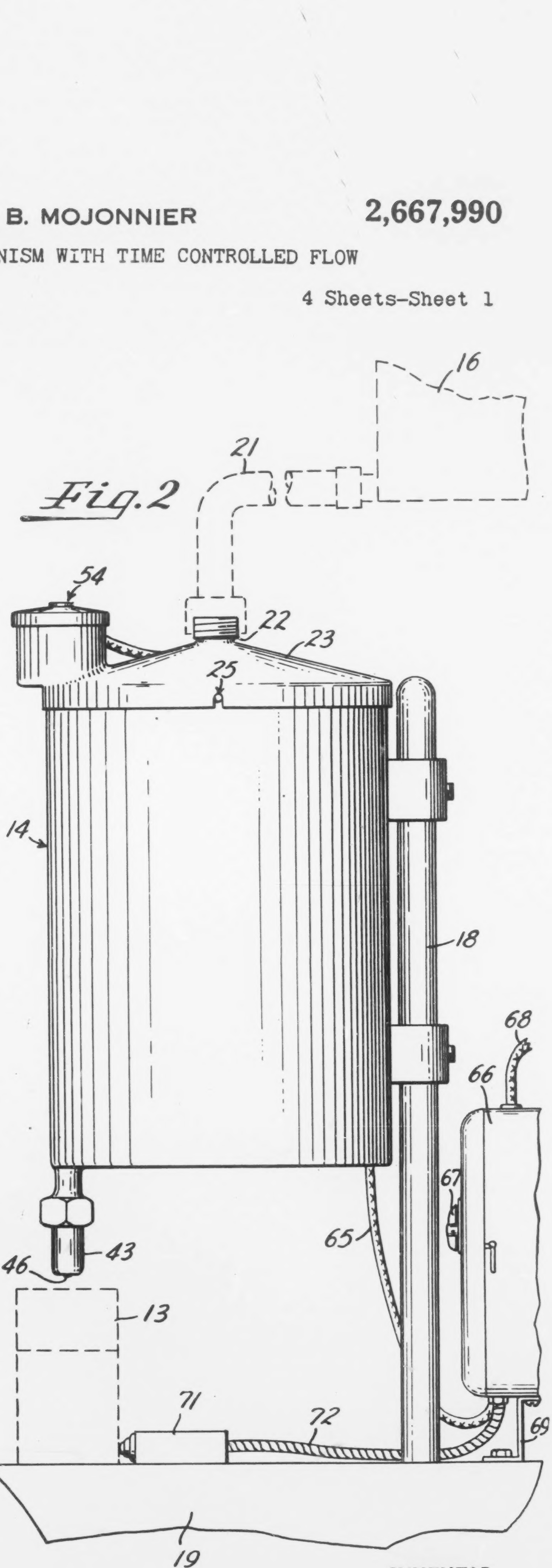

INVENTOR.
Albert B. Majonnier
BY
McCanna and Morsbach
ATTYS.

1228

Feb. 2, 1954 A. B. MOJONNIER 2,667,990

DISPENSING MECHANISM WITH TIME CONTROLLED FLOW

Filed April 4, 1949 4 Sheets-Sheet 2

Fig. 3

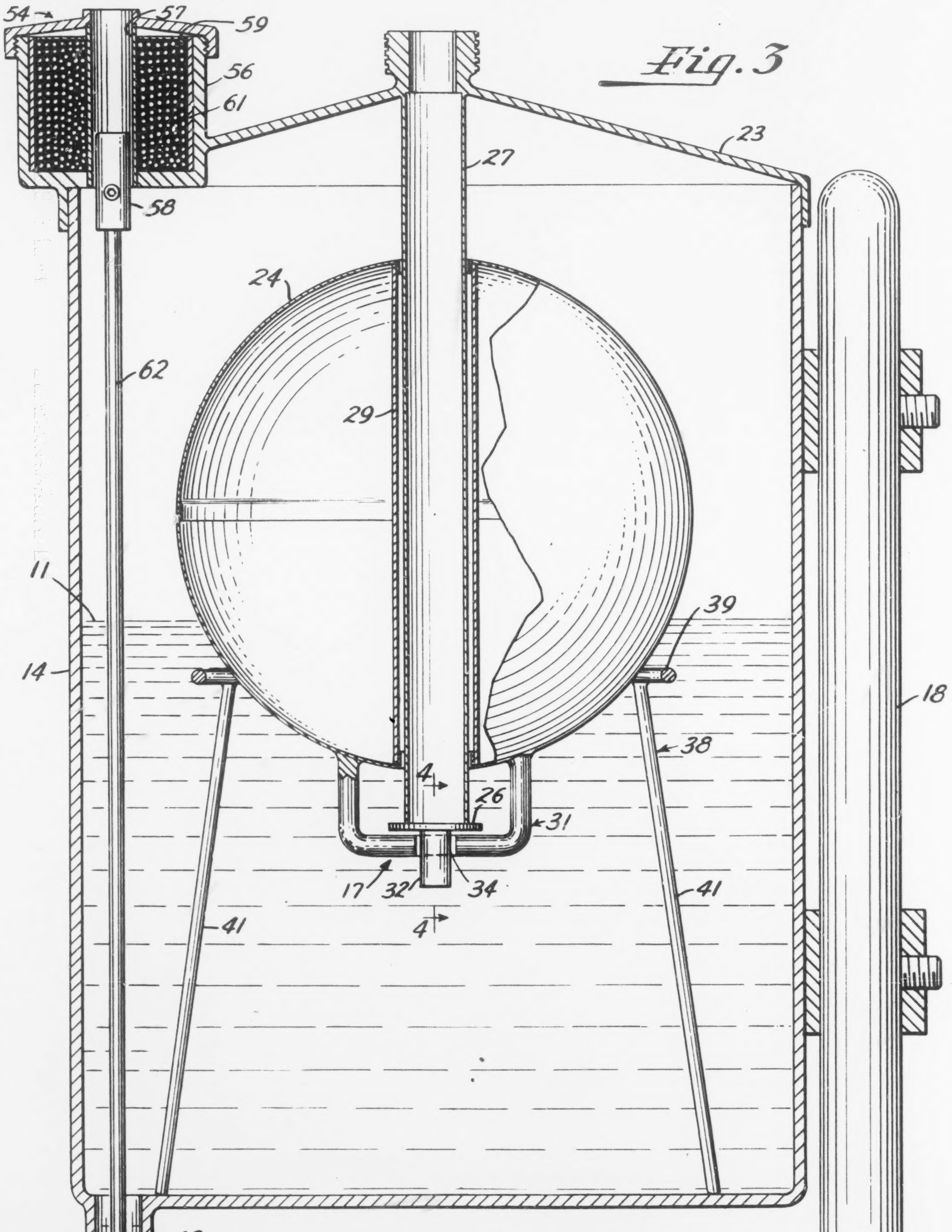

Fig. 4

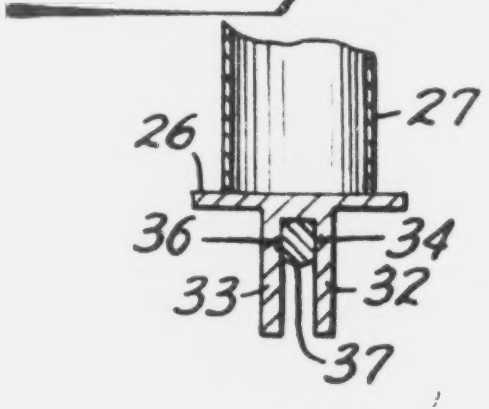

INVENTOR.
Albert B. Majonnier
BY
McCanna and Morsbach
ATTYS.

1230

Feb. 2, 1954 A. B. MOJONNIER 2,667,990

DISPENSING MECHANISM WITH TIME CONTROLLED FLOW

Filed April 4, 1949 4 Sheets-Sheet 3

Fig. 5

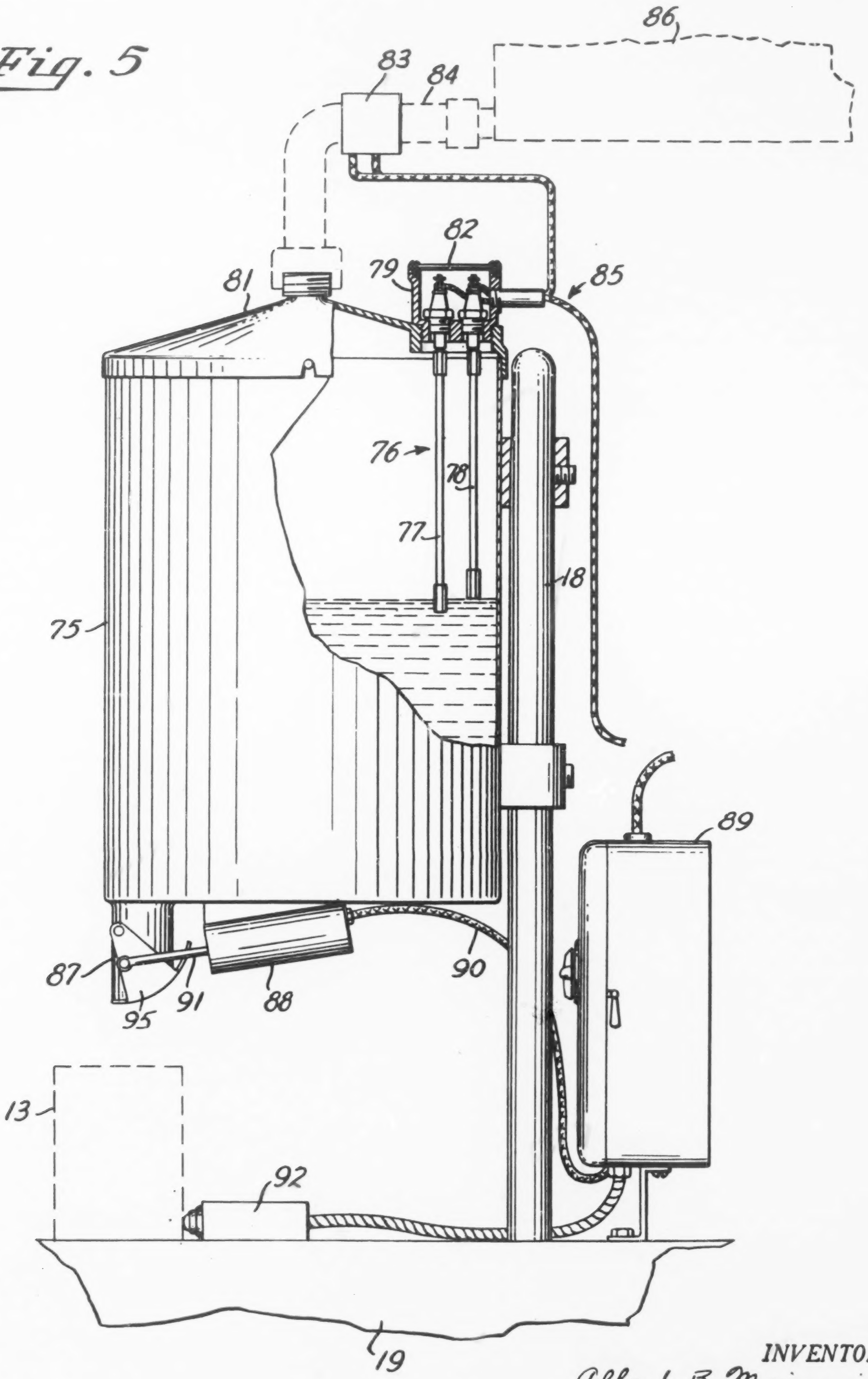

INVENTOR.
Albert B. Majonnier
BY
McCanna and Morsbach
ATTYS.

12:32

Feb. 2, 1954 A. B. MOJONNIER 2,667,990

DISPENSING MECHANISM WITH TIME CONTROLLED FLOW

Filed April 4, 1949 4 Sheets-Sheet 4

Fig. 6

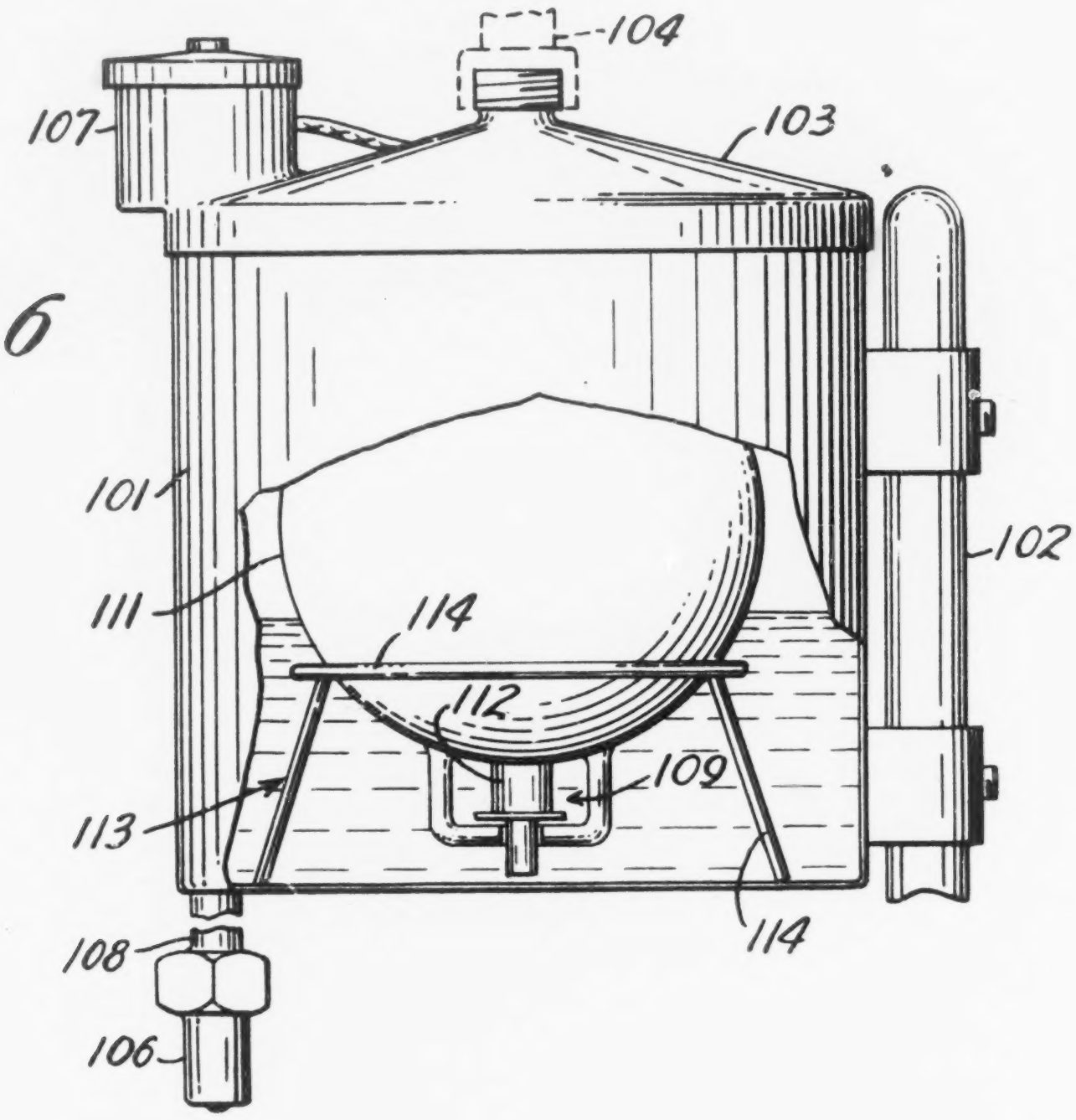

Fig. 7

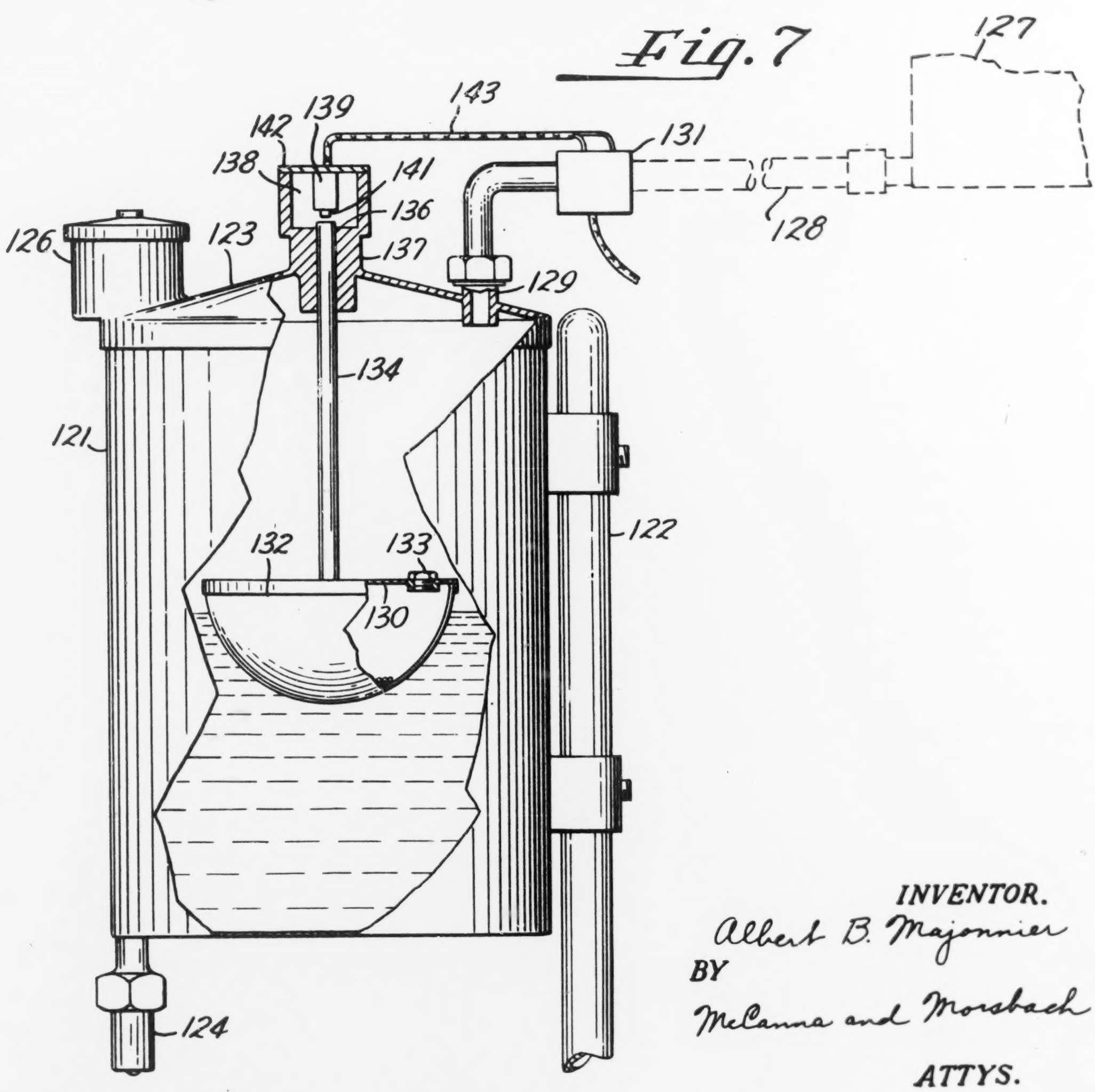

INVENTOR.
Albert B. Majonnier
BY
McCanna and Morsbach
ATTYS.

12333

UNITED STATES PATENT OFFICE

REISSUED

2,667,990

DISPENSING MECHANISM WITH TIME CONTROLLED FLOW

Albert B. Mojonnier, Leyden Township, Cook County, Ill., assignor to The Mojonnier-Dawson Co., a corporation of Illinois

Application April 4, 1949, Serial No. 85,278

5 Claims. (Cl. 222—67)

MAY 18 1954

RE23830

This invention relates to mechanisms for dispensing milk, whipping cream, beverages, syrup, paint, shellac, hand lotion, cosmetics, insecticides, powders, drugs, and other free flowing fluids and comminuted materials, and more particularly to mechanisms for dispensing such free flowing materials into containers.

Heretofore vacuum and plunger type dispensing mechanisms have been widely used. While a number of different types of these mechanisms have been available they have not always been satisfactory for all purposes, particularly for dispensing free flowing fluids. One of the disadvantages of prior constructions has been with respect to their accuracy, that is, being able to dispense within very close tolerances the same volume or weight of fluid upon successive operations of the dispensing mechanism. For example, vacuum dispensing mechanisms while fairly accurate for dispensing fluid into a container to a preselected level are not accurate insofar as volumetric displacements of free flowing fluids are concerned. Plunger type dispensing mechanisms are in general designed for accurately dispensing, from a volumetric displacement standpoint, pasty materials and solids and are not so accurate when utilized to dispense free flowing fluids.

Another drawback of prior constructions has been that they are in general designed for one particular application. Where a concern dispenses several different products it has been necessary, therefore, to have different dispensing mechanisms for each product. This is costly both in using space in a factory and in inventory of equipment. Where prior dispensing mechanisms have been adaptable for a variety of uses, they have not, in general, been designed so that the displacement of the mechanism can be quickly and accurately adjusted.

Moreover, most prior dispensing mechanisms have had the disadvantage that they have been so constructed that they are difficult to assemble, disassemble, clean and service. Prior constructions have been so complicated and have had so many small parts connected together that form small crevices, shoulders, and the like that it has been practically impossible to thoroughly clean them. As a consequence the attempted use of such mechanisms in the dairy and the like industries has met with disfavor. In many instances health officials have disproved the use of such dispensing units because milk passing through such units is subject to being contaminated since they cannot be thoroughly and adequately cleaned. Another industry which does not employ dispensing mechanisms to any great extent because they have been so hard to clean is the paint industry. Due to the wide variety of colors required to be stocked by a paint manufacturer, a paint manufacturer does not can large quantities of paint at one time. With available scientific instruments it is possible to match colors exactly. Consequently there is no need to store huge quantities of paint in a warehouse. Prior dispensers have been so complicated that it takes as long to thoroughly clean the dispensing equipment after a given color has been run through the dispenser as it does to manually dispense the paint into the cans. Also with prior constructions the amount of paint left in the dispenser at the end of a dispensing run is such that in many instances there is as much paint left over as is actually dispensed into the cans. Such left-over paint of course is a complete waste. Because of these disadvantages with prior dispensing mechanisms paint manufacturers have found that it is to their advantage both economically and practically to manually can paint.

An important object of the present invention is to provide a multi-purpose dispensing mechanism that may be used to accurately dispense volumetrically any free flowing fluid.

Another object of the invention is to provide a dispensing mechanism of the above character with novel means for dispensing to a high degree of accuracy predetermined volumes of fluid upon successive actuations of the dispensing mechanism.

Another object of the invention is to provide a dispensing mechanism of the above character that is of simple construction, that is relatively inexpensive to manufacture, that is easy to assemble and disassemble, and that requires a minimum of maintenance throughout its service life.

Another object of the invention is to provide a dispensing mechanism of the above character wherein the volume of fluid discharged from the mechanism may be quickly and easily changed to any desired volume within the limits of the dispensing mechanism.

Another object of the invention is the provision of means wherein the splash effected by discharging the fluid into a receptacle may be controlled.

Another object of the invention is to provide a novel dispensing mechanism of the above character that may be used on a wide variety of fluids.

Another object of the invention is the provision

of a novel dispensing mechanism that has a minimum of parts arranged and constructed so that they can be thoroughly and readily cleaned.

Another object of the invention is the provision of a dispensing mechanism that is so arranged and constructed that it can be maintained in a sanitary condition.

Another object of the invention is to provide a dispensing mechanism of the above character wherein there is a minimum amount of fluid material left in the dispensing mechanism at the end of a dispensing run.

Other objects and advantages of the invention will become apparent from the following detailed description taken in connection with the accompanying drawings, in which—

Figure 1 is a front elevation of a dispensing mechanism embodying the present invention;

Fig. 2 is a side elevation of the dispensing mechanism shown in Figure 1;

Fig. 3 is a vertical section view taken through a solenoid operated discharge valve and float valve of the dispensing mechanism;

Fig. 4 is a sectional view taken substantially along the line 4—4 of Fig. 3, and

Figs. 5, 6 and 7 show modified forms of the invention.

For purposes of illustration the invention is shown embodied in a dispensing mechanism for free flowing fluids such as water, chemical solutions, milk, cream, solvents, liquid pastes, and the like. It is to be understood that these named fluids are by way of illustration only and this list is not intended to constitute a limitation on the applications of the dispensing mechanism to be hereinafter described. In general the dispensing mechanism comprises a constant level fluid supply 11 and a timer controlled valve means 12 for dispensing fluid from the supply into a desired receptacle 13.

As shown in Figs. 1–4 the means for establishing and maintaining the constant level fluid supply 11 comprises a container 14, a main liquid supply tank 16 and a float valve means 17 in the container 14 operable to permit flow of liquid from the main supply tank 16 to the container 14 when the level in the latter is lowered, such as when the valve means 12 is opened to fill the receptacle 13. The container 14 may be adjustably mounted on an upright standard 18, rigid with a table or support 19, so that it may be moved to any desired vertical position above the table 19 to accommodate receptacles 13 of different heights. The container 14 may be of any suitable size, shape and material depending on the particular application involved. The main liquid supply tank 16 may be of any suitable size and shape preferably having a larger capacity than the container 14 and mounted above the latter. The tank 16 communicates with the container 14 through a suitable conduit 21. The latter is attached to the bottom of the tank 16 and to a boss 22 on a removable cap 23 forming the top of the container 14. With this construction liquid flows from the main supply tank 16 to the dispensing container 14 by gravity. Any other suitable means of supplying fluid from the main tank 16 to the dispensing container 14, such as by a pumping system may be used where desired. The cap 23 is positively positioned on the upper part of the container 14 by a pin and slot construction 25.

The float valve means 17 in this instance comprises a float 24 and a disc 26 shaped to seat on the end of a vertical extending tubular member 27. The latter is rigid with the cap and extends downwardly from the top of the cap. At its upper end the tubular member 27 is in communication with the conduit 21. As shown the float 24 is formed by two hemispherical members joined together in sealed relation. A vertically extending tubular member 29 forming a passageway shaped to receive the vertically extending tubular member 27 is rigidly supported by the hemispherical members and is in sealed relation therewith. Sufficient clearance is provided between the tubular members 27 and 29 to permit reciprocable movement of the float 24 in response in changes in liquid level in the container 14. This construction insures that the float is guided in its reciprocatory movement and insures seating of the disc on the end of the tubular member 27. The disc 26 is supported on the float 24 by a U-shaped member 31, the legs of which are rigidly attached to the bottom of the float 24. Extending downwardly from the extreme bottom of the disc 26, as best seen in Fig. 4, are spaced members 32 and 33 shaped to be received in recesses 34 and 36, respectively, formed on opposite sides of a bridging member 37 of the U-shaped member 31. The latter construction maintains the disc 26 in assembled relation with the bridging member 31 while at the same time permitting sufficient free movement of the disc 26 to insure proper seating thereof. A cage 38 disposed in the container 14 limits the permissible downward movement of the float 24. As shown the cage comprises a ring 39 of less diameter than the maximum diameter of the float 24 and annularly spaced legs 41 shaped to rest on the bottom of the container. The length of the legs 41 and the length of the tube 27 may be varied so that any desired liquid level in the container may be maintained.

The timer controlled valve means 12 is best shown in Figs. 2 and 3. It includes a discharge nozzle 43 having an opening 44 at one end and a ball valve element 46 shaped to fit in the opening 44 to close the latter. Preferably the land 45 adjacent the opening 44, on the interior of the nozzle is cupped as shown in Fig. 3 to facilitate seating of the ball element 46.

In this instance the nozzle 43 is secured to a flange formed on a downwardly projecting hollow boss 47, as by a detachable coupling element 48. The boss 47 is rigid with the bottom of the container. The abutting surfaces between the flange and the nozzle are preferably frusto-conical shaped as shown so that when the coupling 48 is tightened the nozzle is positively held in engagement with the flange on the boss 47. To prevent leakage of fluid a gasket 49 may be disposed between the flange on the boss 47 and the nozzle 43. The coupling 48 is formed with an annular inturned shoulder 51 shaped to engage a radially projecting shoulder 53 formed on the nozzle 43. With this construction it is relatively easy to unscrew the coupling 48 to remove one nozzle 43 and replace it with a different sized nozzle. The dispensing mechanism may thus be utilized over a wide range of dispensing applications particularly where the different applications require widely varying volumetric displacements. In this embodiment of the invention the ball element 46 is under the control of a solenoid unit 54, disposed in a compartment 56 formed on the top of the cap 23. The solenoid is of conventional construction comprising an inner tubular member 57 shaped to receive a plunger 58, the solenoid coil 59 and an outer

1235

sleeve 61 surrounding the solenoid coil 59, all serving their usual functions. The plunger 58 is detachably connected to the upper end of a rod 62 rigidly connected at its opposite end to the ball valve element 46. The arrangement is such that upon energization of the coil 59 the plunger 58 is caused to move upward to unseat the ball valve 46 and upon deenergization of the solenoid coil 59 the ball valve 46 seats itself under the influence of gravity.

A timer 66 is utilized in this instance to control the energization of the solenoid coil 59 through the leads in a conduit 65. Any commercially available interval timer 66 may be used. To simplify the drawings herein the timer is shown only in elevation. Especially good results are obtained with an electronic timer of the type illustrated in Bulletin PC 478 manufactured by Photo Switch Inc., Cambridge 42, Mass., capable of continuous adjustment throughout its timing range. The preselected time intervals may be chosen by means of the dial 67 mounted on the front of the timer 66. Power for the timer is supplied through suitable power leads in a conduit 68. While the timer may be mounted at any convenient location, for purposes of illustration it is shown as being mounted on a bracket 69 rigid with the table top 19. The timer 66 may be actuated by a switch 71 interconnected with the timer 66 by suitable leads in a conduit 72. As shown in Fig. 2 the switch 71 is of the precision snap action type and is mounted on the top of the table 19 beneath the container 14 so that it may be actuated by the receptacle 13 that is to be filled.

The operation of the dispensing mechanism is apparent from the foregoing but may be summarized as follows: The container 14 is filled to a preselected level. The receptacle 13 is moved into position under the nozzle 43. In so doing the receptacle 13 engages and actuates the switch 71. The latter in turn actuates the timer 66 which actuates the solenoid coil 59 and effects the opening of the ball valve 46. The liquid then flows from the container 14 into the receptacle 13. After the preselected time interval has elapsed the timer 66 effects deenergization of the solenoid coil 59 with the result that the ball valve 46 returns to close the opening 44 and stop the flow of fluid from the container 14. The filled receptacle 13 is removed and replaced with an empty receptacle so that the cycle may be repeated.

It is to be understood that as liquid flows from the container 14 into the receptacle 13 the liquid level in the container 14 will tend to drop. This causes the float 24 to move downwardly and the disc 26 is unseated from the end of the tube 27. Liquid from the main supply tank 16 then flows into the container 14. When the level of fluid reaches the predetermined level, the float 24 raises, effecting the seating of the disc 26 on the end of the tube 27 and thereby prevents additional flow of fluid from the supply tank 16 into the container 14. By maintaining the level in the container 14 constant, a constant pressure head for the dispensing mechanism is assured. Because the pressure head is maintained at a substantially constant value and the time intervals during which the valve 12 is open are exactly the same, substantially equal volumes of fluid are discharged from the dispensing mechanism into the receptacles 13 upon successive actuations of the dispensing mechanism. Check runs on installations show that very little variation, determined by weighing filled receptacles, occurs upon successive actuations of the dispensing mechanism.

The volumetric constancy of discharge of the dispensing mechanism of the present invention can probably best be understood by considering the applicable laws of hydraulics. The equation for the steady frictionless discharge from an orifice is one of the first known quantitative relationships in hydraulics and is expressed as follows:

$$V=\sqrt{2gh}$$

where V is the velocity of flow of fluid through the orifice, g is the effect of gravity and has the value of 32.2 feet per second at sea level and h is the head or the distance from the center of the orifice to the top of the fluid which is discharged through the orifice. The volume of liquid discharged through such an orifice at any time is, of course, directly dependent upon the velocity of flow through the orifice and the area of the orifice. By virtue of the constant supply source 16 and the control means such as 17 in Fig. 3 of the drawings for maintaining a constant head in the receptacle 14, the term h in the above equation is also constant. Moreover, since the area of the nozzle is constant for frictionless fluids, the volumetric discharge for a constant time period remains constant. This furthermore is also true even though a frictionless fluid is not involved. All the fluids, of course, have a viscosity factor which will cause a variation in the velocity of discharge through an orifice dependent upon changes in viscosity, but for any particular liquid being dispensed, this viscosity is also constant. Moreover, various orifices have different effects and to take care of this an orifice factor must be included in the general equation. Hence, since the variables of head of liquid, viscosity, area of the orifice, orifice factor and time interval during which the orifice is open to permit discharge therefrom are all constant, the volumetric discharge for each actuation of the dispenser is also constant. There has, therefore, been provided a very simple arrangement for assuring uniform dispensing in a simple manner which eliminates the difficulties of prior art devices discussed above.

In Fig. 5 there is shown a modification of the invention. In lieu of using a float valve for controlling the liquid level in a dispensing container 75 in this embodiment of the invention, an electrode probe control 76 is used for this purpose. The probe comprises two conventional electrodes 77 and 78 supported in a suitable enclosed mounting 79 threaded into an opening in the removable cap 81 and arranged to project into the interior of the container. Access to the terminals of the probes may be had by removing a cover 82, removably secured to a conventional mounting 79. The probes 77 and 78 are electrically interconnected by suitable electrical connections 85 with a valve 83 disposed in a conduit 84 between a main supply tank 86 and the container 75. When the liquid level in the container 75 goes below a certain preselected level the probe circuit operates to open the valve 83 to permit more liquid to flow into the container 75. When the liquid reaches a preselected lower level the probe circuit operates to close the valve 83. For purposes of illustration the probes 77 and 78 are relatively far apart. By preselecting the high and low levels, however, so that they are relatively close it is to be understood that a relatively constant level can be maintained in the

container 75 in the same manner as that described for the float valve construction shown in the embodiment in Figs. 1–4.

The discharge nozzle in this instance is in the form of a molasses gate valve 87 mounted on the bottom of the container 75. The valve 87 is operated by a solenoid unit 88 mounted on the underside of the container 75. The solenoid unit 88 is electrically connected to a conventional interval timer 89 by leads in a conduit 90 and is mechanically connected to the gate valve by a rod 91 pivotally connected to a movable valve element 95 on the valve 87. The timer 89 may be actuated by a switch 92 in the manner described hereinbefore. The general operation of this embodiment of the invention is the same as that described for the first embodiment of the invention.

In Fig. 6 there is shown another embodiment of the invention. To simplify the drawings the timer has been omitted since it has the same construction as that described hereinbefore. The construction shown in Fig. 6 is adaptable primarily for applications wherein the quantity of fluid left in the dispensing unit at the conclusion of a dispensing operation is important. In general the construction shown in Fig. 6 is similar to the construction shown in Fig. 3 and includes a container 101 mounted on an upright 102. A cover 103 covers the top of the container 101. A conduit 104 connected to the cover 103 is connected to a fluid supply, not shown, in the manner disclosed for the construction shown in Fig. 3. Fluid is dispensed from the container 101 through a valve 106 controlled by a solenoid operated control unit 107 mounted on the cover 103. The valve 106 is mounted at the end of a tubular member 108 rigid with the bottom of the container that may be of any desired length depending on the desired pressure head for dispensing the fluid. A valve mechanism 109 operated by a float 111 controls the inflow of fluid to the container 101 through a tubular member 112, the latter being in communication with the conduit 104 in the manner shown for the construction disclosed in Fig. 3. The float 111 is mounted on a cage 113 comprising an annular member 114 of smaller diameter than the float 111 and having relatively short supporting legs 112. By making the legs short the float 111 and valve mechanism 109 may be disposed in closely spaced relation to the bottom of the container 101. As a consequence the quantity of fluid left in the container 101 at the conclusion of a dispensing run is very small. This construction is particularly suited to the dispensing of paint and the like materials, where the amount of fluid left in the container at the end of a run is important.

In Fig. 7 there is shown another construction of the dispensing mechanism that is particularly suitable for dispensing fluids such as "Freon" having a relatively high density. To simplify the drawings the timer control has been omitted since it has the same construction as that described hereinbefore. The construction in Fig. 7 includes a container 121 mounted on an upright 122, a cover 123 mounted on top of the container, and a valve 124 at the bottom of the container for dispensnig liquid from the container controlled by a solenoid control unit 126 mounted on the cover 123, these parts being constructed in general in the manner disclosed for the construction shown in Fig. 3. The container 121 is in communication with a main supply tank 127 through a conduit 128 connected at one end of the tank 127 and at its opposite end in a conventional manner to a hollow boss 129 on the cover 123. A solenoid operated valve unit 131 is connected in the conduit 128 to control the flow of fluid from the tank 127 to the container 121. The operation of the valve unit 131 is in this instance under the control of a float 132 disposed in the container 121. As shown the float 132 is a hemispherical member having a cover 130. A removable plug 133 is mounted on the cover 130. In some instances the density of the liquid or fluid being dispensed is such that the float must be weighted. Accordingly, shot or the like may be introduced into the float 132 through the opening closed by the plug 133 to properly weight the float. Projecting upwardly from the cover 130 is a vertically disposed rod 134. The latter is rigidly connected to the float and extends through a snug fitting vertically disposed passageway 136 in a boss 137 formed on the cover 123. The upper end of the boss is recessed to define a chamber 138 for a switch 139. As shown the latter is a small precision switch of the normally closed type and is located so that the extreme end of the rod 134 engages a plunger 141 on the switch 139. As shown the switch 139 is mounted on a cover plate 142 and projects downwardly therefrom into the chamber 138. Suitable leads in a conduit 143 connect the switch 139 to the unit 131 and a power source.

In this construction the float 132 moves up and down in response to changes in the level of the fluid in the container 121 as described for the other embodiments. As a consequence the rod 134 is caused to move up and down to thereby actuate the switch 139. The boss 137 in effect defines a guide for the rod 134 in its reciprocatory motion. When liquid is dispensed from the container 121 the float 132 moves downwardly. This causes the rod 134 to move downwardly so that the switch 139 moves to its normally closed position. This effects energization of the solenoid in the unit 131 which in turn opens the valve 131. Liquid thus flows from the main supply tank 127 to the container 121. As soon as liquid flows into the container 121, the level therein rises and the float 132 moves upwardly. This causes the rod 134 to move upwardly to engage the plunger 141 and move the switch 139 to its open position, thereby deenergizing the solenoid in the unit 131 and closing the valve 131 to stop the flow of liquid to the container 121. Thus the liquid level in the container 121 may be maintained substantially constant at any preselected value.

While in each embodiment of the invention there is shown only one dispensing nozzle or valve it is to be understood that any number of dispensing nozzles or valves may be used on a given dispensing container. These valves may be operated independently or may be operated simultaneously. The valves may also be operated manually by an operator or by the receptacle being filled. In some installations a number of dispensing units may be placed in a line so that each operates in succession to fill a receptacle. Where it is desired to control the splash in such an installation the pressure head (or liquid level) maintained in each dispensing unit may be progressively different for each dispensing unit.

One advantage of the construction shown herein is the ease by which the volumetric displacement of the dispensing mechanisms may be adjusted. Because of this, the dispensing mech-

1237

anism may be quickly and readily changed whenever it becomes necessary, as when the size of the receptacle being filled or the type of fluid is changed. Because of the wide range of applications for these dispensing mechanisms they are, in effect, multi-purpose units.

It is readily apparent from the drawings that these dispensing units are advantageous from an assembly, disassembly and maintenance standpoint. As will be noted the component parts are relatively large and readily accessible and consequently can be readily and thoroughly cleaned. To clean the component parts of the dispensing mechanism such as shown in Fig. 3 it is first necessary to remove the cover 23. When the cover 23 is removed the rod 62 may be readily pulled upwardly to remove it from the container 14. Thus the lower end of the rod and ball 46 may be thoroughly cleaned. The float 24 may be readily removed from the top of the container and because of its configuration may be readily cleaned. A bottle brush may be used to clean the tubular portion 29 of the float 24 and the tubular portion 27 on the cover 23. The connection between the disc 26 and the bridging portion 31 is such that the disc 26 may be readily removed from the bridging portion 31 and thoroughly cleaned. The cage 38 may also be readily removed from the container 14. To clean the nozzle 43 it is only necessary to remove the flange 48 from the projecting flange 43. As soon as the parts are removed from the container 14 the latter may be removed from the standard 18 and submerged in a proper cleaning fluid so that it too may be thoroughly cleaned. Because of the small number of component parts, it is readily apparent that a minimum of time is required to disassemble the unit, to clean the parts and to reassemble them in an operative relation.

While I have shown several embodiments of my invention I do not wish to be limited thereto, since many modifications may be made and I therefore contemplate by the appended claims to cover any such modifications as fall within the true spirit and scope of my invention.

I claim:

1. In a dispensing mechanism, the combination of a fluid container, means for supplying fluid to said container, means in said container operable to maintain the fluid in the container at a preselected level, a valve mounted on the container for dispensing fluid from the container into a receptacle, a solenoid mounted on said container for operating said valve, a member extending through said container for interconnecting said solenoid and said valve, an interval timer for controlling the energization of the solenoid and means to actuate said timer to energize said solenoid and thereby move said member to open said valve whereby a substantially constant volume of liquid is dispensed each time said solenoid is energized.

2. In a dispensing mechanism, the combination of a container for a free flowing fluid having a removable top and a bottom, means for supplying fluid to said container, said top having a vertically extending tubular member projecting inwardly of the container and in communication with said fluid supply, detachable valve means mounted on said bottom for dispensing fluid from the container, a float member having a tubular passageway shaped to receive said tubular member, and a disc supported by said float member and shaped to seat on the end of the tubular member to control the flow of fluid from said fluid supply means to said container, said float being operable in response to a lowering of the fluid level below a preselected level to unseat the disc and effect a flow of fluid to the container and operable when the level is raised to a preselected level to seat the disc to prevent the flow of fluid to the container, said removable top and said detachable valve permitting the disassembly of the dispensing mechanism to permit cleaning of the elements of the dispenser.

3. In a dispensing mechanism, the combination of a container for a free flowing fluid having a removable top and a bottom having a discharge opening therein, means for supplying fluid to said container, said top having a vertically extending tubular member projecting inwardly of the container and in communication with said fluid supply, detachable valve means mounted on the bottom of said container to control the flow of fluid through the discharge opening, a solenoid mounted on said container, a member extending through said container and interconnecting the solenoid and the valve, an interval timer for controlling the energization of the solenoid, means for actuating the timer to energize the solenoid and move the member to open the valve, a float member having a tubular passageway shaped to receive said tubular member, and a disc supported by said float member shaped to seat on the end of the tubular member to place the tubular member in and out of communication with the interior of the container, said float being operable in response to a lowering of the fluid level below a preselected level to unseat the disc to effect flow of fluid to the container and operable when the level is raised to a preselected level to seat the disc to prevent flow of fluid to the container whereby the fluid is maintained at a substantially constant level so that each actuation of the solenoid causes the valve to discharge equal volumes of fluid from said container, said detachable valve and removable top permitting the disassembly of the dispensing mechanism to permit cleaning of the elements of the dispenser.

4. In a dispensing mechanism, the combination of a container for a free flowing fluid having a removable top and a bottom, means for supplying fluid to said container, said top having a vertically extending tubular member projecting inwardly of the container and in communication with said fluid supply, detachable valve means mounted on said bottom for dispensing fluid from the container, actuating means mounted on said container for opening and closing said valve, timing means for controlling the actuation of said actuating means to open said valve at predetermined intervals for a preselected duration, a float member having a tubular passageway shaped to receive said tubular member, a substantially U-shaped arm secured to said float member, a slotted member in engagement with said U-shaped member and movable therewith, a disc secured to said slotted member and shaped to seat on the end of the tubular member to control the supply of fluid from said fluid supply means to said container, said float being operable in response to a lowering of the fluid level below a preselected level to cause the U-shaped member to move within the slotted member and unseat the disc to effect flow of fluid to the container and operable when the level is raised to a preselected level to cause the U-shaped member to raise the disc and stop the flow of fluid from the fluid supply means whereby the fluid within said container is maintained at a substantially

constant level and equal volumes of fluid are discharged for each actuation of the valve, cage means disposed within said container to limit the downward movement of the float and maintain the fluid in the container at a low level to prevent splashing when the fluid is dispensed, the removable top and the detachable valve permitting the disassembly of the dispensing mechanism so that the elements of the dispenser may be cleaned.

5. In a dispensing mechanism, the combination of a container for a free flowing fluid having a removable top and a bottom, means for supplying fluid to said container, said top having a vertically extending tubular member projecting inwardly of the container and in communication with said fluid supply, detachable valve means mounted on said bottom for dispensing fluid from the container, a solenoid mounted on said container for opening and closing said valve, a member extending within said container for interconnecting the valve and the solenoid, timing means for controlling the actuation of said solenoid to open said valve at predetermined intervals for a preselected duration, a float member having a tubular passageway shaped to receive said tubular member, a substantially U-shaped arm secured to said float member, a slotted member in engagement with said U-shaped member and movable therewith, a disc secured to said slotted member and shaped to seat on the end of the tubular member to control the supply of fluid from said fluid supply means to said container, said float being operable in response to a lowering of the fluid level below a preselected level to cause the U-shaped member to move within the slotted member and unseat the disc to effect flow of fluid to the container and operable when the level is raised to a preselected level to cause the U-shaped member to raise the disc and stop the flow of fluid from the fluid supply means whereby the fluid within said container is maintained at a substantially constant level and equal volumes of fluid are discharged for each actuation of the valve, and cage means disposed within said container to limit the downward movement of said float to maintain the U-shaped member within the slotted member and to maintain the fluid level in the container at a low level to prevent splashing when the fluid is dispensed, the removable cap and the detachable valve permitting the facile disassembly of the dispensing mechanism to permit cleaning of the elements of the dispenser.

ALBERT B. MOJONNIER.

References Cited in the file of this patent

UNITED STATES PATENTS

Number	Name	Date
1,381,442	Thompson	June 14, 1921
1,553,385	Kohr	Sept. 15, 1925
1,613,248	Searing	Jan. 4, 1927
2,254,833	Ashkenaz	Sept. 2, 1941
2,392,054	McKinnis	Jan. 1, 1946
2,396,527	Osborne	Mar. 12, 1946
2,462,019	Bowman	Feb. 15, 1949
2,515,363	Warren	July 18, 1950

1240

May 18, 1954 A. B. MOJONNIER Re. 23,830

DISPENSING MECHANISM WITH TIME CONTROLLED FLOW

Original Filed April 4, 1949 4 Sheets-Sheet 1

Fig. 1

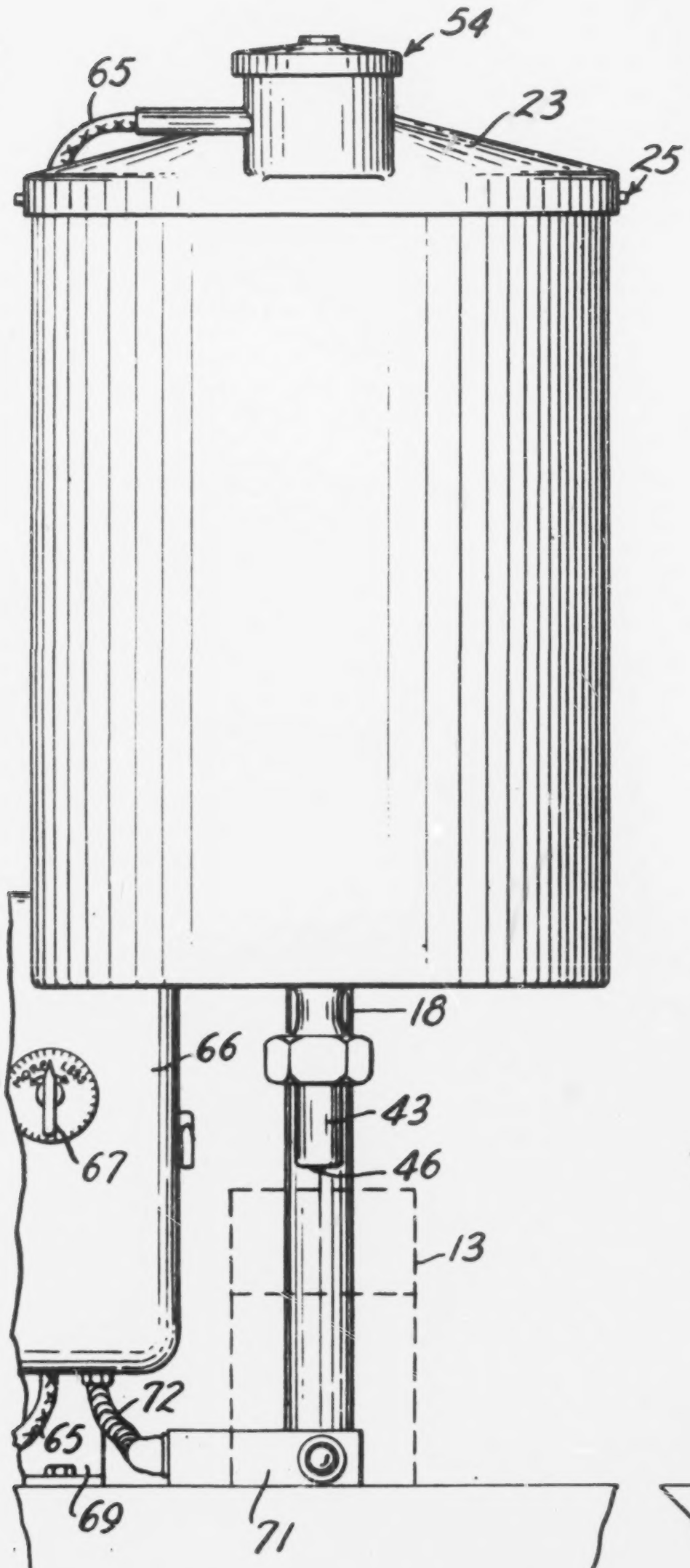

Fig. 2

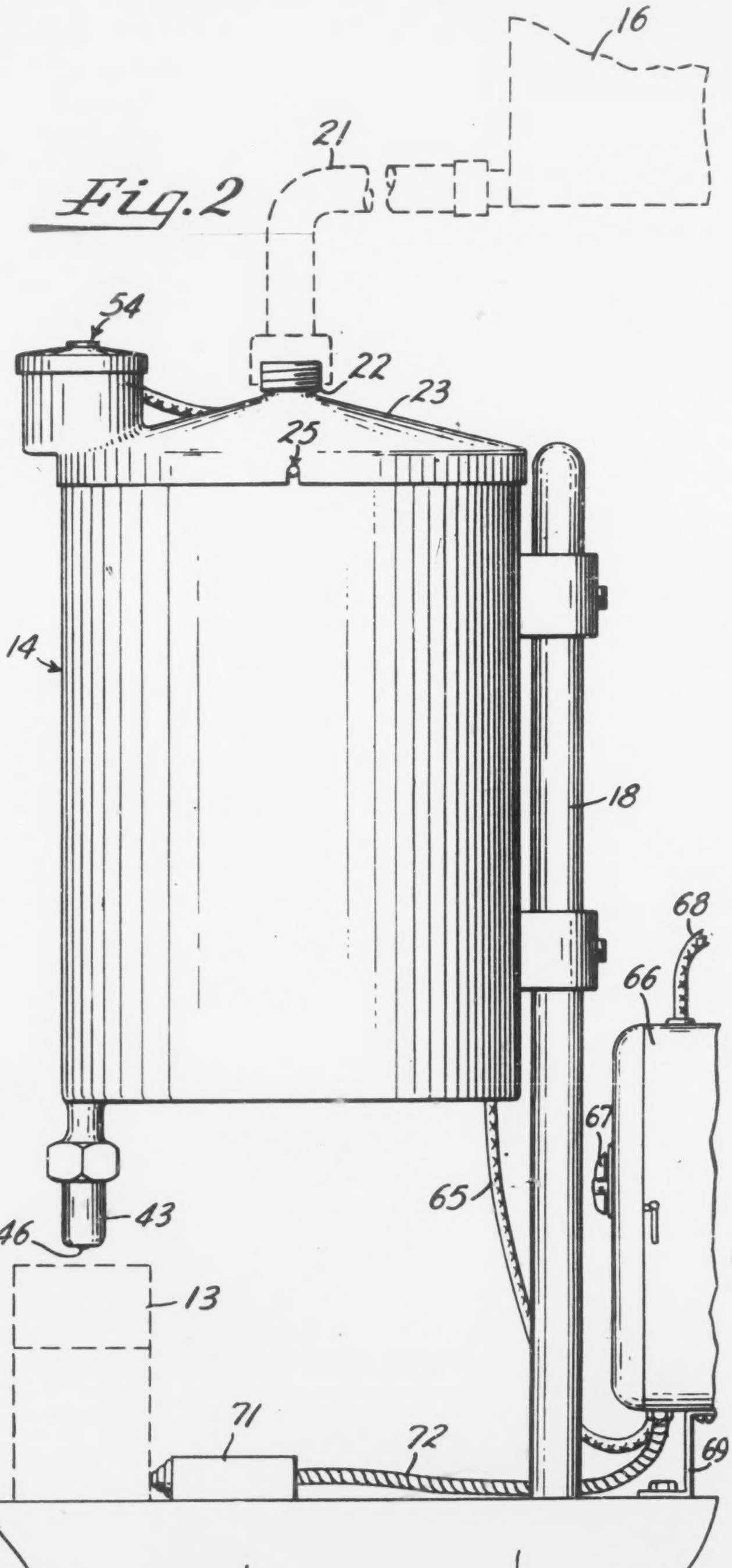

INVENTOR.
Albert B. Majonnier
BY
McCanna and Morsbach
ATTYS.

1242

1

May 18, 1954 A. B. MOJONNIER Re. 23,830

DISPENSING MECHANISM WITH TIME CONTROLLED FLOW

Original Filed April 4, 1949 4 Sheets-Sheet 2

Fig. 3

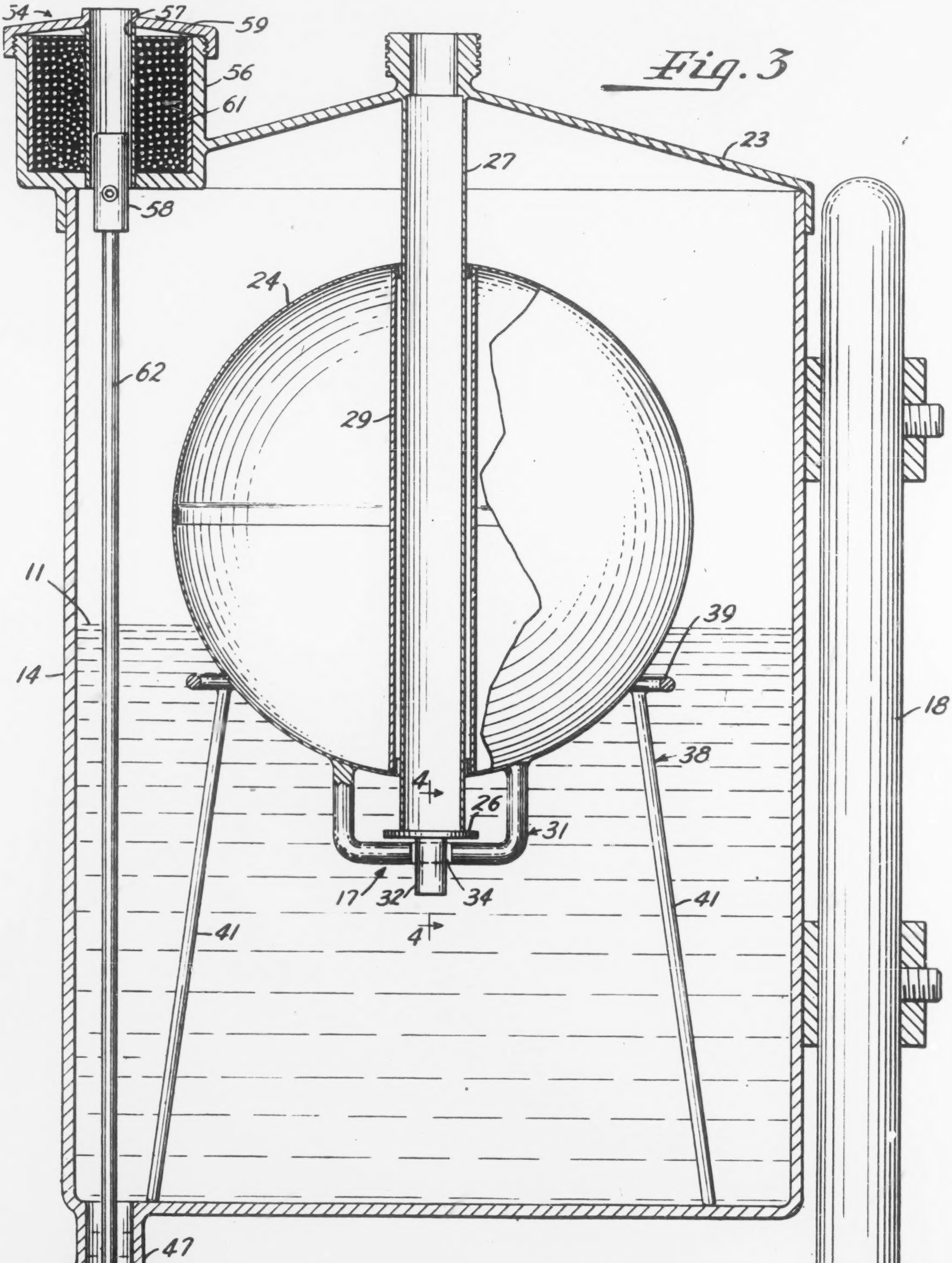

Fig. 4

INVENTOR.

Albert B. Majonnier

BY

McCanna and Morsbach

ATTYS.

1244

May 18, 1954 A. B. MOJONNIER Re. 23,830

DISPENSING MECHANISM WITH TIME CONTROLLED FLOW

Original Filed April 4, 1949 4 Sheets-Sheet 3

Fig. 5

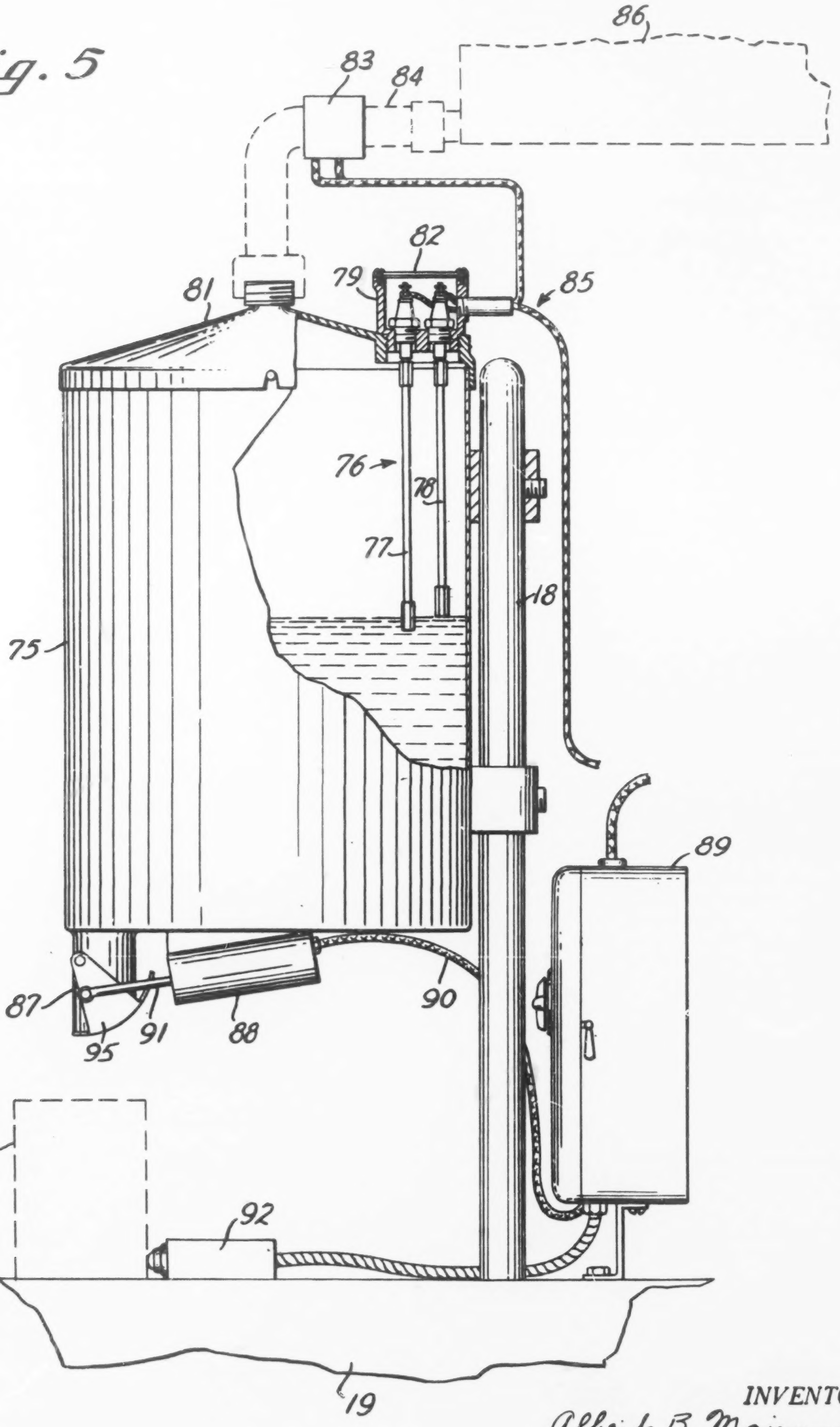

INVENTOR.
Albert B. Majonnier
BY
McCanna and Morsbach
ATTYS.

1246

May 18, 1954 A. B. MOJONNIER Re. 23,830

DISPENSING MECHANISM WITH TIME CONTROLLED FLOW

Original Filed April 4, 1949 4 Sheets-Sheet 4

Fig. 6

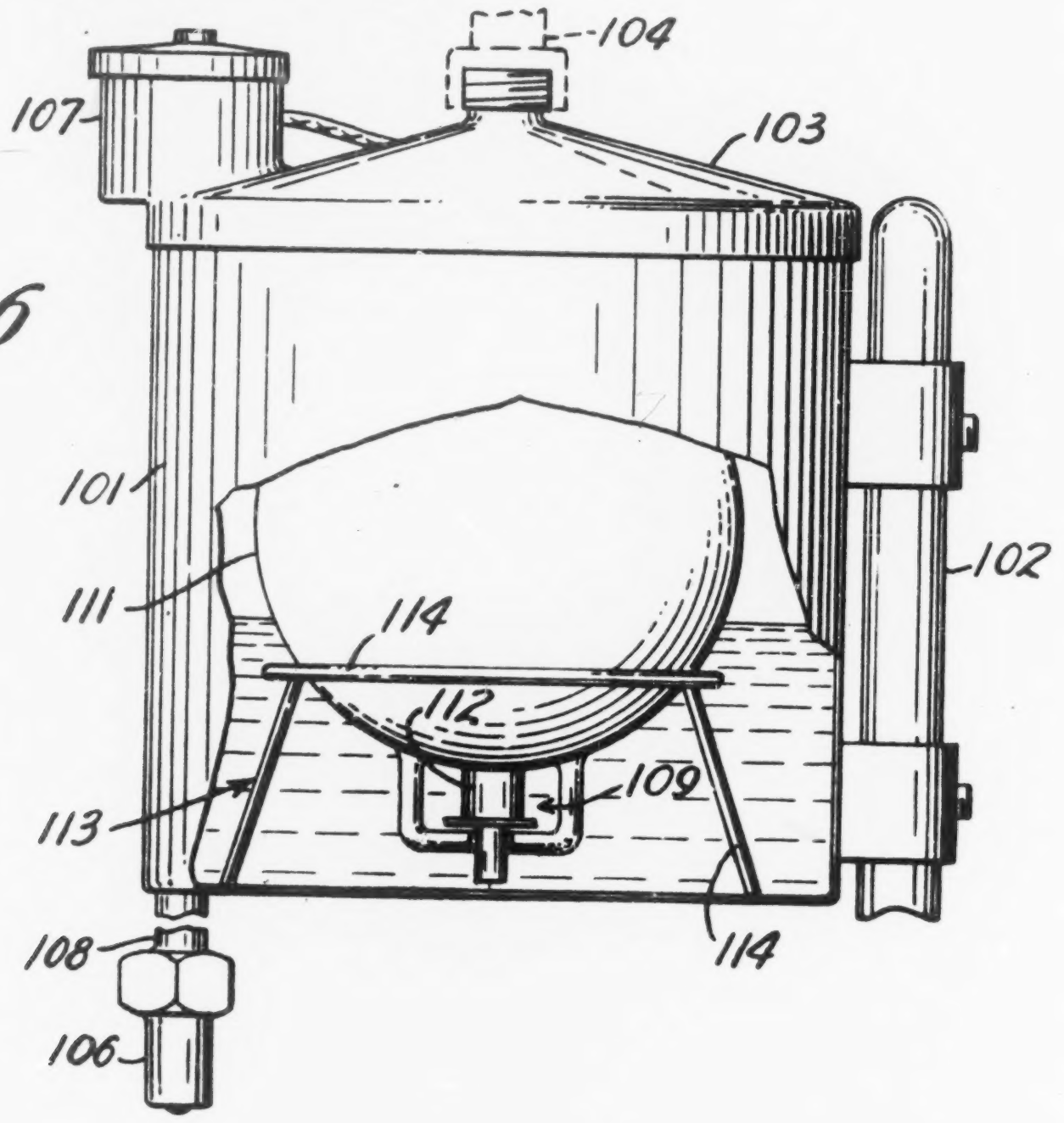

Fig. 7

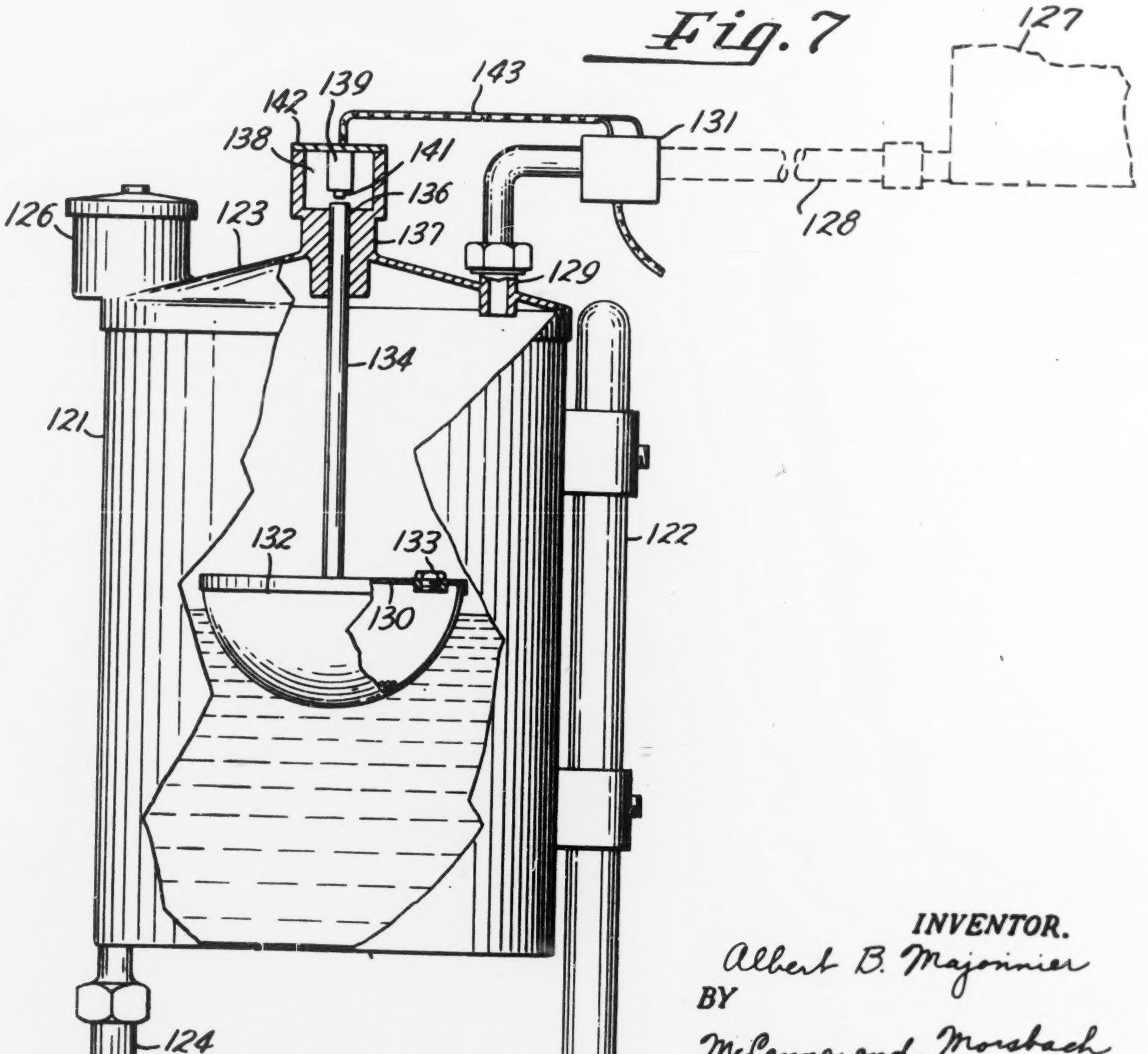

INVENTOR.
Albert B. Majonnier
BY
McCanna and Morsbach
ATTYS.

Reissued May 18, 1954

Re. 23,830

UNITED STATES PATENT OFFICE

1247

23,830

DISPENSING MECHANISM WITH TIME CONTROLLED FLOW

Albert B. Mojonnier, Chicago, Ill., assignor to The Mojonnier-Dawson Co., a corporation of Illinois

Original No. 2,667,990, dated February 2, 1954, Serial No. 85,278, April 4, 1949. Application for reissue February 24, 1954, Serial No. 412,406

7 Claims. (Cl. 222—67)

Matter enclosed in heavy brackets [ ] appears in the original patent but forms no part of this reissue specification; matter printed in italics indicates the additions made by reissue.

1

This invention relates to mechanisms for dispensing milk, whipping cream, beverages, syrup, paint, shellac, hand lotion, cosmetics, insecticides, powders, drugs, and other free flowing fluids and comminuted materials, and more particularly to mechanisms for dispensing such free flowing materials into containers.

Heretofore vacuum and plunger type dispensing mechanisms have been widely used. While a number of different types of these mechanisms have been available they have not always been satisfactory for all purposes, particularly for dispensing free flowing fluids. One of the disadvantages of prior constructions has been with respect to their accuracy, that is, being able to dispense within very close tolerances the same volume or weight of fluid upon successive operations of the dispensing mechanism. For example, vacuum dispensing mechanisms while fairly accurate for dispensing fluid into a container to a preselected level are not accurate insofar as volumetric displacements of free flowing fluids are concerned. Plunger type dispensing mechanisms are in general designed for accurately dispensing, from a volumetric displacement standpoint, pasty materials and solids and are not so accurate when utilized to dispense free flowing fluids.

Another drawback of prior constructions has been that they are in general designed for one particular application. Where a concern dispenses several different products it has been necessary, therefore, to have different dispensing mechanisms for each product. This is costly both in using space in a factory and in inventory of equipment. Where prior dispensing mechanisms have been adaptable for a variety of uses, they have not, in general, been designed so that the displacement of the mechanism can be quickly and accurately adjusted.

Moreover, most prior dispensing mechanisms have had the disadvantage that they have been so constructed that they are difficult to assemble, disassemble, clean and service. Prior constructions have been so complicated and have had so many small parts connected together that form small crevices, shoulders, and the like that it has been practically impossible to thoroughly clean them. As a consequence the attempted use of such mechanisms in the dairy and the like industries has met with disfavor. In many instances health officials have disproved the use of such dispensing units because milk passing through such units is subject to being contaminated since they cannot be thoroughly and adequately cleaned. Another industry which does

2

not employ dispensing mechanisms to any great extent because they have been so hard to clean is the paint industry. Due to the wide variety of colors required to be stocked by a paint manufacturer, a paint manufacturer does not can large quantities of paint at one time. With available scientific instruments it is possible to match colors exactly. Consequently there is no need to store huge quantities of paint in a warehouse. Prior dispensers have been so complicated that it takes as long to thoroughly clean the dispensing equipment after a given color has been run through the dispenser as it does to manually dispense the paint into the cans. Also with prior constructions the amount of paint left in the dispenser at the end of a dispensing run is such that in many instances there is as much paint left over as is actually dispensed into the cans. Such left-over paint of course is a complete waste. Because of these disadvantages with prior dispensing mechanisms paint manufacturers have found that it is to their advantage both economically and practically to manually can paint.

An important object of the present invention is to provide a multi-purpose dispensing mechanism that may be used to accurately dispense volumetrically any free flowing fluid.

Another object of the invention is to provide a dispensing mechanism of the above character with novel means for dispensing to a high degree of accuracy predetermined volumes of fluid upon successive actuations of the dispensing mechanism.

Another object of the invention is to provide a dispensing mechanism of the above character that is of simple construction, that is relatively inexpensive to manufacture, that is easy to assemble and disassemble, and that requires a minimum of maintenance throughout its service life.

Another object of the invention is to provide a dispensing mechanism of the above character wherein the volume of fluid discharged from the mechanism may be quickly and easily changed to any desired volume within the limits of the dispensing mechanism.

Another object of the invention is the provision of means wherein the splash effected by discharging the fluid into a receptacle may be controlled.

Another object of the invention is to provide a novel dispensing mechanism of the above character that may be used on a wide variety of fluids.

Another object of the invention is the provision of a novel dispensing mechanism that has a minimum of parts arranged and constructed so

that they can be thoroughly and readily cleaned.

Another object of the invention is the provision of a dispensing mechanism that is so arranged and constructed that it can be maintained in a sanitary condition.

Another object of the invention is to provide a dispensing mechanism of the above character wherein there is a minimum amount of fluid material left in the dispensing mechanism at the end of a dispensing run.

Other objects and advantages of the invention will become apparent from the following detailed description taken in connection with the accompanying drawings, in which—

Figure 1 is a front elevation of a dispensing mechanism embodying the present invention;

Fig. 2 is a side elevation of the dispensing mechanism shown in Figure 1;

Fig. 3 is a vertical section view taken through a solenoid operated discharge valve and float valve of the dispensing mechanism;

Fig. 4 is a sectional view taken substantially along the line 4—4 of Fig. 3, and

Figs. 5, 6 and 7 show modified forms of the invention.

For purposes of illustration the invention is shown embodied in a dispensing mechanism for free flowing fluids such as water, chemical solutions, milk, cream, solvents, liquid pastes, and the like. It is to be understood that these named fluids are by way of illustration only and this list is not intended to constitute a limitation on the applications of the dispensing mechanism to be hereinafter described. In general the dispensing mechanism comprises a constant level fluid supply 11 and a timer controlled valve means 12 for dispensing fluid from the supply into a desired receptacle 13.

As shown in Figs. 1–4 the means for establishing and maintaining the constant level fluid supply 11 comprises a container 14, a main liquid supply tank 16 and a float valve means 17 in the container 14 operable to permit it flow of liquid from the main supply tank 16 to the container 14 when the level in the latter is lowered, such as when the valve means 12 is opened to fill the receptacle 13. The container 14 may be adjustably mounted on an upright standard 18. rigid with a table or support 19, so that it may be moved to any desired vertical position above the table 19 to accommodate receptacles 13 of different heights. The container 14 may be of any suitable size, shape and material depending on the particular application involved. The main liquid supply tank 16 may be of any suitable size and shape preferably having a larger capacity than the container 14 and mounted above the latter. The tank 16 communicates with the container 14 through a suitable conduit 21. The latter is attached to the bottom of the tank 16 and to a boss 22 on a removable cap 23 forming the top of the container 14. With this construction liquid flows from the main supply tank 16 to the dispensing container 14 by gravity. Any other suitable means of supplying fluid from the main tank 16 to the dispensing container 14. such as by a pumping system may be used where desired. The cap 23 is positively positioned on the upper part of the container 14 by a pin and slot construction 25.

The float valve means 17 in this instance comprises a float 24 and a disc 26 shaped to seat on the end of a vertical extending tubular member 27. The latter is rigid with the cap and extends downwardly from the top of the cap. At its

upper end the tubular member 27 is in communication with the conduit 21. As shown the float 24 is formed by two hemispherical members joined together in sealed relation. A vertically extending tubular member 29 forming a passageway shaped to receive the vertically extending tubular member 27 is rigidly supported by the hemispherical members and is in sealed relation therewith. Sufficient clearance is provided between the tubular members 27 and 29 to permit reciprocable movement of the float 24 in response to changes in liquid level in the container 14. This construction insures that the float is guided in its reciprocatory movement and insures seating of the disc on the end of the tubular member 27. The disc 26 is supported on the float 24 by a U-shaped member 31, the legs of which are rigidly attached to the bottom of the float 24. Extending downwardly from the extreme bottom of the disc 26, as best seen in Fig. 4, are spaced members 32 and 33 shaped to be received in recesses 34 and 36, respectively, formed on opposite sides of a bridging member 37 of the U-shaped member 31. The latter construction maintains the disc 26 in assembled relation with the bridging member 31 while at the same time permitting sufficient free movement of the disc 26 to insure proper seating thereof. A cage 38 disposed in the container 14 limits the permissible downward movement of the float 24. As shown the cage comprises a ring 39 of less diameter than the maximum diameter of the float 24 and annularly spaced legs 41 shaped to rest on the bottom of the container. The length of the legs 41 and the length of the tube 27 may be varied so that any desired liquid level in the container may be maintained.

The timer controlled valve means 12 is best shown in Figs. 2 and 3. It includes a discharge nozzle 43 having an opening 44 at one end and a ball valve element 46 shaped to fit in the opening 44 to close the latter. Preferably the land 45 adjacent the opening 44, on the interior of the nozzle is cupped as shown in Fig. 3 to facilitate seating of the ball element 46.

In this instance the nozzle 43 is secured to a flange formed on a downwardly projecting hollow boss 47, as by a detachable coupling element 48. The boss 47 is rigid with the bottom of the container. The abutting surfaces between the flange and the nozzle are preferably frusto-conical shaped as shown so that when the coupling 48 is tightened the nozzle is positively held in engagement with the flange on the boss 47. To prevent leakage of fluid a gasket 49 may be disposed between the flange on the boss 47 and the nozzle 43. The coupling 48 is formed with an annular inturned shoulder 51 shaped to engage a radially projecting shoulder 53 formed on the nozzle 43. With this construction it is relatively easy to unscrew the coupling 48 to remove one nozzle 43 and replace it with a different sized nozzle. The dispensing mechanism may thus be utilized over a wide range of dispensing applications particularly where the different applications require widely varying volumetric displacements. In this embodiment of the invention the ball element 46 is under the control of a solenoid unit 54, disposed in a compartment 56 formed on the top of the cap 23. The solenoid is of conventional construction comprising an inner tubular member 57 shaped to receive a plunger 58, the solenoid coil 59 and an outer sleeve 61 surrounding the solenoid coil 59, all serving their usual functions. The plunger 58

is detachably connected to the upper end of a rod 62 rigidly connected at its opposite end to the ball valve element 46. The arrangement is such that upon energization of the coil 59 the plunger 58 is caused to move upward to unseat the ball valve 46 and upon deenergization of the solenoid coil 59 the ball valve 46 seats itself under the influence of gravity.

A timer 66 is utilized in this instance to control the energization of the solenoid coil 59 through the leads in a conduit 65. Any commercially available interval timer 66 may be used. To simplify the drawings herein the timer is shown only in elevation. Especially good results are obtained with an electronic timer of the type illustrated in Bulletin PC 478 manufactured by Photo Switch Inc., Cambridge 42, Mass., capable of continuous adjustment throughout its timing range. The preselected time intervals may be chosen by means of the dial 67 mounted on the front of the timer 66. Power for the timer is supplied through suitable power leads in a conduit 68. While the timer may be mounted at any convenient location, for purposes of illustration it is shown as being mounted on a bracket 69 rigid with the table top 19. The timer 66 may be actuated by a switch 71 interconnected with the timer 66 by suitable leads in a conduit 72. As shown in Fig. 2 the switch 71 is of the precision snap action type and is mounted on the top of the table 19 beneath the container 14 so that it may be actuated by the receptacle 13 that is to be filled.

The operation of the dispensing mechanism is apparent from the foregoing but may be summarized as follows: The container 14 is filled to a preselected level. The receptacle 13 is moved into position under the nozzle 43. In so doing the receptacle 13 engages and actuates the switch 71. The latter in turn actuates the timer 66 which actuates the solenoid coil 59 and effects the opening of the ball valve 46. The liquid then flows from the container 14 into the receptacle 13. After the preselected time interval has elapsed the timer 66 effects deenergization of the solenoid coil 59 with the result that the ball valve 46 returns to close the opening 44 and stop the flow of fluid from the container 14. The filled receptacle 13 is removed and replaced with an empty receptacle so that the cycle may be repeated.

It is to be understood that as liquid flows from the container 14 into the receptacle 13 the liquid level in the container 14 will tend to drop. This causes the float 24 to move downwardly and the disc 26 is unseated from the end of the tube 27. Liquid from the main supply tank 16 then flows into the container 14. When the level of fluid reaches the predetermined level, the float 24 raises, effecting the seating of the disc 26 on the end of the tube 27 and thereby prevents additional flow of fluid from the supply tank 16 into the container 14. By maintaining the level in the container 14 constant, a constant pressure head for the dispensing mechanism is assured. Because the pressure head is maintained at a substantially constant value and the time intervals during which the valve 12 is open are exactly the same, substantially equal volumes of fluid are discharged from the dispensing mechanism into the receptacles 13 upon successive actuations of the dispensing mechanism. Check runs on installations show that very little variation, determined by weighing filled receptacles, occurs upon successive actuations of the dispensing mechanism.

The volumetric constancy of discharge of the dispensing mechanism of the present invention can probably best be understood by considering the applicable laws of hydraulics. The equation for the steady frictionless discharge from an orifice is one of the first known quantitative relationships in hydraulics and is expressed as follows:

$$V=\sqrt{2gh}$$

where V is the velocity of flow of fluid through the orifice, g is the effect of gravity and has the value of 32.2 feet per second at sea level and h is the head or the distance from the center of the orifice to the top of the fluid which is discharged through the orifice. The volume of liquid discharged through such an orifice at any time is, of course, directly dependent upon the velocity of flow through the orifice and the area of the orifice. By virtue of the constant supply source 16 and the control means such as 17 in Fig. 3 of the drawings for maintaining a constant head in the receptacle 14, the term h in the above equation is also constant. Moreover, since the area of the nozzle is constant for frictionless fluids, the volumetric discharge for a constant time period remains constant. This furthermore is also true even though a frictionless fluid is not involved. All the fluids, of course, have a viscosity factor which will cause a variation in the velocity of discharge through an orifice dependent upon changes in viscosity, but for any particular liquid being dispensed, this viscosity is also constant. Moreover, various orifices have different effects and to take care of this an orifice factor must be included in the general equation. Hence, since the variables of head of liquid, viscosity, area of the orifice, orifice factor and time interval during which the orifice is open to permit discharge therefrom are all constant, the volumetric discharge for each actuation of the dispenser is also constant. There has, therefore, been provided a very simple arrangement for assuring uniform dispensing in a simple manner which eliminates the difficulties of prior art devices discussed above.

In Fig. 5 there is shown a modification of the invention. In lieu of using a float valve for controlling the liquid level in a dispensing container 75 in this embodiment of the invention, an electrode probe control 76 is used for this purpose. The probe comprises two conventional electrodes 77 and 78 supported in a suitable enclosed mounting 79 threaded into an opening in the removable cap 81 and arranged to project into the interior of the container. Access to the terminals of the probes may be had by removing a cover 82, removably secured to a conventional mounting 79. The probes 77 and 78 are electrically interconnected by suitable electrical connections 85 with a valve 83 disposed in a conduit 84 between a main supply tank 86 and the container 75. When the liquid level in the container 75 goes below a certain preselected level the probe circuit operates to open the valve 83 to permit more liquid to flow into the container 75. When the liquid reaches a preselected lower level the probe circuit operates to close the valve 83. For purposes of illustration the probes 77 and 78 are relatively far apart. By preselecting the high and low levels, however, so that they are relatively close it is to be understood that a relatively constant level can be maintained in the container 75 in the same manner as that de-

scribed for the float valve construction shown in the embodiment in Figs. 1–4.

The discharge nozzle in this instance is in the form of a molasses gate valve 87 mounted on the bottom of the container 75. The valve 87 is operated by a solenoid unit 88 mounted on the underside of the container 75. The solenoid unit 88 is electrically connected to a conventional interval timer 85 by leads in a conduit 90 and is mechanically connected to the gate valve by a rod 91 pivotally connected to a movable valve element 95 on the valve 87. The timer 89 may be actuated by a switch 92 in the manner described hereinbefore. The general operation of this embodiment of the invention is the same as that described for the first embodiment of the invention.

In Fig. 6 there is shown another embodiment of the invention. To simplify the drawings the timer has been omitted since it has the same construction as that described hereinbefore. The construction shown in Fig. 6 is adaptable primarily for applications wherein the quantity of fluid left in the dispensing unit at the conclusion of a dispensing operation is important. In general the construction shown in Fig. 6 is similar to the construction shown in Fig. 3 and includes a container 101 mounted on an upright 102. A cover 103 covers the top of the container 101. A conduit 104 connected to the cover 103 is connected to a fluid supply, not shown, in the manner disclosed for the construction shown in Fig. 3. Fluid is dispensed from the container 101 through a valve 106 controlled by a solenoid operated control unit 107 mounted on the cover 103. The valve 106 is mounted at the end of a tubular member 108 rigid with the bottom of the container that may be of any desired length depending on the desired pressure head for dispensing the fluid. A valve mechanism 109 operated by a float 111 controls the inflow of fluid to the container 101 through a tubular member 112, the latter being in communication with the conduit 104 in the manner shown for the construction disclosed in Fig. 3. The float 111 is mounted on a cage 113 comprising an annular member 114 of smaller diameter than the float 111 and having relatively short supporting legs 112. By making the legs short the float 111 and valve mechanism 109 may be disposed in closely spaced relation to the bottom of the container 101. As a consequence the quantity of fluid left in the container 101 at the conclusion of a dispensing run is very small. This construction is particularly suited to the dispensing of paint and the like materials, where the amount of fluid left in the container at the end of a run is important.

In Fig. 7 there is shown another construction of the dispensing mechanism that is particularly suitable for dispensing fluids such as "Freon" having a relatively high density. To simplify the drawings the timer control has been omitted since it has the same construction as that described hereinbefore. The construction in Fig. 7 includes a container 121 mounted on an upright 122, a cover 123 mounted on top of the container, and a valve 124 at the bottom of the container for dispensing liquid from the container controlled by a solenoid control unit 126 mounted on the cover 123, these parts being constructed in general in the manner disclosed for the construction shown in Fig. 3. The container 121 is in communication with a main supply tank 127 through a conduit 128 connected at one end of the tank 127 and at its opposite end in a conventional manner to a hollow boss 129 on the cover 123. A solenoid operated valve unit 131 is connected in the conduit 128 to control the flow of fluid from the tank 127 to the container 121. The operation of the valve unit 131 is in this instance under the control of a float 132 disposed in the container 121. As shown the float 132 is a hemispherical member having a cover 130. A removable plug 133 is mounted on the cover 130. In some instances the density of the liquid or fluid being dispensed is such that the float must be weighted. Accordingly, shot or the like may be introduced into the float 132 through the opening closed by the plug 133 to properly weight the float. Projecting upwardly from the cover 130 is a vertically disposed rod 134. The latter is rigidly connected to the float and extends through a snug fitting vertically disposed passageway 136 in a boss 137 formed on the cover 123. The upper end of the boss is recessed to define a chamber 138 for a switch 139. As shown the latter is a small precision switch of the normally closed type and is located so that the extreme end of the rod 134 engages a plunger 141 on the switch 139. As shown the switch 139 is mounted on a cover plate 142 and projects downwardly therefrom into the chamber 138. Suitable leads in a conduit 143 connect the switch 139 to the unit 131 and a power source.

In this construction the float 132 moves up and down in response to changes in the level of the fluid in the container 121 as described for the other embodiments. As a consequence the rod 134 is caused to move up and down to thereby actuate the switch 139. The boss 137 in effect defines a guide for the rod 134 in its reciprocatory motion. When liquid is dispensed from the container 121 the float 132 moves downwardly. This causes the rod 134 to move downwardly so that the switch 139 moves to its normally closed position. This effects energization of the solenoid in the unit 131 which in turn opens the valve 131. Liquid thus flows from the main supply tank 127 to the container 121. As soon as liquid flows into the container 121, the level therein rises and the float 132 moves upwardly. This causes the rod 134 to move upwardly to engage the plunger 141 and move the switch 139 to its open position, thereby deenergizing the solenoid in the unit 131 and closing the valve 131 to stop the flow of liquid to the container 121. Thus the liquid level in the container 121 may be maintained substantially constant at any preselected value.

While in each embodiment of the invention there is shown only one dispensing nozzle or valve it is to be understood that any number of dispensing nozzles or valves may be used on a given dispensing container. These valves may be operated independently or may be operated simultaneously. The valves may also be operated manually by an operator or by the receptacle being filled. In some installations a number of dispensing units may be placed in a line so that each operates in succession to fill a receptacle. Where it is desired to control the splash in such an installation the pressure head (or liquid level) maintained in each dispensing unit may be progressively different for each dispensing unit.

One advantage of the construction shown herein is the ease by which the volumetric displacement of the dispensing mechanisms may be adjusted. Because of this, the dispensing mech-

anism may be quickly and readily changed whenever it becomes necessary, as when the size of the receptacle being filled or the type of fluid is changed. Because of the wide range of applications for these dispensing mechanisms they are, in effect, multi-purpose units.

It is readily apparent from the drawings that these dispensing units are advantageous from an assembly, disassembly and maintenance standpoint. As will be noted the component parts are relatively large and readily accessible and consequently can be readily and thoroughly cleaned. To clean the component parts of the dispensing mechanism such as shown in Fig. 3 it is first necessary to remove the cover 23. When the cover 23 is removed the rod 62 may be readily pulled upwardly to remove it from the container 14. Thus the lower end of the rod and ball 46 may be thoroughly cleaned. The float 24 may be readily removed from the top of the container and because of its configuration may be readily cleaned. A bottle brush may be used to clean the tubular portion 29 of the float 24 and the tubular portion 27 on the cover 23. The connection between the disc 26 and the bridging portion 31 is such that the disc 26 may be readily removed from the bridging portion 31 and thoroughly cleaned. The cage 38 may also be readily removed from the container 14. To clean the nozzle 43 it is only necessary to remove the flange 48 from the projecting flange 43. As soon as the parts are removed from the container 14 the latter may be removed from the standard 18 and submerged in a proper cleaning fluid so that it too may be thoroughly cleaned. Because of the small number of component parts, it is readily apparent that a minimum of time is required to disassemble the unit, to clean the parts and to reassemble them in an operative relation.

While I have shown several embodiments of my invention I do not wish to be limited thereto, since many modifications may be made and I therefore contemplate by the appended claims to cover any such modifications as fall within the true spirit and scope of my invention.

I claim:

1. In a dispensing mechanism, the combination of a fluid container, means for supplying fluid to said container, means in said container operable to maintain the fluid in the container at a preselected level, a valve mounted on the container for dispensing fluid from the container into a receptacle, a solenoid mounted on said container for operating said valve, a member extending through said container for interconnecting said solenoid and said valve, an interval timer for controlling the energization of the solenoid and means to actuate said timer to energize said solenoid and thereby move said member to open said valve, whereby a substantially constant volume of liquid is dispensed each time said solenoid is energized.

2. In a dispensing mechanism, the combination of a container for a free flowing fluid having a removable top and a bottom, means for supplying fluid to said container, said top having a vertically extending tubular member projecting inwardly of the container and in communication with said fluid supply, detachable valve means mounted on said bottom for dispensing fluid from the container, a float member having a tubular passageway shaped to receive said tubular member, and a disc supported by said float member and shaped to seat on the end of the tubular member to control the flow of fluid from said fluid supply means to said container, said float being operable in response to a lowering of the fluid level below a preselected level to unseat the disc and effect a flow of fluid to the container and operable when the level is raised to a preselected level to seat the disc to prevent the flow of fluid to the container, said removable top and said detachable valve permitting the disassembly of the dispensing mechanism to permit cleaning of the elements of the dispenser.

3. In a dispensing mechanism, the combination of a container for a free flowing fluid having a removable top and a bottom having a discharge opening therein, means for supplying fluid to said container, said top having a vertically extending tubular member projecting inwardly of the container and in communication with said fluid supply, detachable valve means mounted on the bottom of said container to control the flow of fluid through the discharge opening, a solenoid mounted on said container, a member extending through said container and interconnecting the solenoid and the valve, an interval timer for controlling the energization of the solenoid, means for actuating the timer to energize the solenoid and move the member to open the valve, a float member having a tubular passageway shaped to receive said tubular member, and a disc supported by said float member shaped to seat on the end of the tubular member to place the tubular member in and out of communication with the interior of the container, said float being operable in response to a lowering of the fluid level below a preselected level to unseat the disc to effect flow of fluid to the container and operable when the level is raised to a preselected level to seat the disc to prevent flow of fluid to the container whereby the fluid is maintained at a substantially constant level so that each actuation of the solenoid causes the valve to discharge equal volumes of fluid from said container, said detachable valve and removable top permitting the disassembly of the dispensing mechanism to permit cleaning of the elements of the dispenser.

4. In a dispensing mechanism, the combination of a container for a free flowing fluid having a removable top and a bottom, means for supplying fluid to said container, said top having a vertically extending tubular member projecting inwardly of the container and in communication with said fluid supply, detachable valve means mounted on said bottom for dispensing fluid from the container, actuating means mounted on said container for opening and closing said valve, timing means for controlling the actuation of said actuating means to open said valve at predetermined intervals for a preselected duration, a float member having a tubular passageway shaped to receive said tubular member, a substantially U-shaped arm secured to said float member, a slotted member in engagement with said U-shaped member and movable therewith, a disc secured to said slotted member and shaped to seat on the end of the tubular member to control the supply of fluid from said fluid supply means to said container, said float being operable in response to a lowering of the fluid level below a preselected level to cause the U-shaped member to move within the slotted member and unseat the disc to effect flow of fluid to the container and operable when the level is raised to a preselected level to cause the U-shaped member to raise the disc and stop the flow of fluid from the fluid supply means whereby the fluid within said container is maintained at a substantially

constant level and equal volumes of fluid are discharged for each actuation of the valve, cage means disposed within said container to limit the downward movement of the float and maintain the fluid in the container at a low level to prevent splashing when the fluid is dispensed, the removable top and the detachable valve permitting the disassembly of the dispensing mechanism so that the elements of the dispenser may be cleaned.

5. In a dispensing mechanism, the combination of a container for a free flowing fluid having a removable top and a bottom, means for supplying fluid to said container, said top having a vertically extending tubular member projecting inwardly of the container and in communication with said fluid supply, detachable valve means mounted on said bottom for dispensing fluid from the container, a solenoid mounted on said container for opening and closing said valve, a member extending within said container for interconnecting the valve and the solenoid, timing means for controlling the actuation of said solenoid to open said valve at predetermined intervals for a preselected duration, a float member having a tubular passageway shaped to receive said tubular member, a substantially U-shaped arm secured to said float member, a slotted member in engagement with said U-shaped member and movable therewith, a disc secured to said slotted member and shaped to seat on the end of the tubular member to control the supply of fluid from said fluid supply means to said container, said float being operable in response to a lowering of the fluid level below a preselected level to cause the U-shaped member to move within the slotted member and unseat the disc to effect flow of fluid to the container and operable when the level is raised to a preselected level to cause the U-shaped member to raise the disc and stop the flow of fluid from the fluid supply means whereby the fluid within said container is maintained at a substantially constant level and equal volumes of fluid are discharged for each actuation of the valve, and cage means disposed within said container to limit the downward movement of said float to maintain the U-shaped member within the slotted member and to maintain the fluid level in the container at a low level to prevent splashing when the fluid is dispensed, the removable cap and the detachable valve permitting the facile disassembly of the dispensing mechanism to permit cleaning of the elements of the dispenser.

6. A filling machine for delivering an accurately controlled predetermined quantity of milk and other free flowing fluids for the repetitive filling of individual milk containers and the like each in a single complete operation, the combination of a relatively large main fluid supply tank; a fluid supply container having a fluid capacity substantially smaller than said main supply tank and larger than the quantity to be delivered in filling said individual containers; said fluid supply container being provided with a bottom delivery outlet having a given orifice factor and area of orifice, through which outlet orifice the fluid freely flows by gravity; a valve in said bottom outlet operable between an open position in which the fluid flows for delivery into an individual container positioned beneath and in filling coaction with said outlet and a closed position for stopping said flow; means operable to deliver said fluid from said main tank to said fluid supply container and to maintain a substantially constant preselected hydrostatic head of the fluid in said supply container, said hydrostatic head having a predetermined value with relation to said orifice factor and area of orifice whereby to effect controlled relatively rapid continuous flow of the fluid from the supply container to the said individual container when the latter is in said filling position; and a timer for controlling the operation of said valve, said timer having a starting switch and operating to control a continuous uninterrupted time period in response to the initial actuation of said switch, said timer controlling said valve to continuously hold open said valve throughout said time period whereby to deliver said predetermined flow and quantity of fluid in a single complete operation to each said individual container and whereby the preselected constant factors of said hydrostatic head in the supply container and said orifice delivery produce relatively rapid filling of said individual container and control of splash effect of the fluid in its discharge into the said individual container, said timer being adjustable to vary said time period and the predetermined quantity of fluid delivered to each individual container.

7. A filling machine for delivering an accurately controlled predetermined quantity of milk and other free flowing fluids for the repetitive filling of individual milk containers and the like each in a single complete operation, the combination of a large source of fluid, a fluid supply container having a fluid capacity substantially smaller than said source and larger than the quantity to be delivered in filling said individual containers, a fluid delivery line interconnecting said source and said supply container, a valve operable to control the flow of fluid through said fluid delivery line into said supply container, the supply container being provided with a bottom delivery outlet having a given orifice factor and area of orifice through which outlet orifice the fluid freely flows by gravity, a valve in said outlet operable between an open position in which the fluid flows for delivery into an individual container located beneath said supply container and a closed position for stopping said flow, a float in said supply container operable to control the first mentioned valve to replace the fluid in said supply container as it is dispensed and also operable to maintain the fluid in the supply container at a preselected level and providing a hydrostatic head of predetermined value with relation to said orifice factor and area of orifice whereby to effect controlled relatively rapid continuous flow of the fluid from the supply container to said individual container when the second mentioned valve is held open, a solenoid for operating said second mentioned valve, operating means interconnecting said second mentioned valve and said solenoid, and an interval timer for controlling the energization of said solenoid to continuously hold open said second mentioned valve for a preselected time period to control a continuous uninterrupted flow delivery of the fluid to said individual container whereby the preselected constant factors of said hydrostatic head in the supply container and said orifice delivery produce relatively rapid filling of said individual container and control of splash effect of the fluid in its discharge into said individual container, said timer being adjustable to vary said time period and the predetermined quantity of fluid delivered to each individual container.

(References on following page)

References Cited in the file of this patent or the original patent

UNITED STATES PATENTS

Number	Name	Date
1,381,442	Thompson	June 14, 1921
1,531,007	Jackson	Mar. 24, 1925
1,553,385	Kohr	Sept. 15, 1925
1,613,248	Searing	Jan. 4, 1927
2,254,833	Ashkenaz	Sept. 2, 1941
2,308,960	Stevens	Jan. 19, 1943
2,392,054	McKinnis	Jan. 1, 1946
2,396,527	Osborne	Mar. 12, 1946
2,462,019	Bowman	Feb. 15, 1949
2,515,363	Warren	July 18, 1950

1253

290 United States of America,
Northern District of Illinois. } ss.

I, Roy H. Johnson, Clerk of the United States District Court for the Northern District of Illinois, do hereby certify the above and foregoing to be a true and complete transcript of the proceedings had of record made in accordance with the Designations of Contents of Record on Appeal filed in this Court in the cause entitled: The Mojonnier Dawson Company, a corporation, Plaintiff *vs.* U. S. Dairies Sales Corporation, a corporation, et al., Defendants, No. 54 C 277, consolidated with No. 55 C 137, as the same appear from the original records and files thereof now remaining among the records of the said Court in my office, except the exhibits which are incorporated herein originally by direction of this Court. The Transcript of Proceedings as certified by the Official Court Reporter is certified by the Clerk as part of this record without comparison with the Clerk's File Copy, pursuant to an order of this Court.

In Testimony Whereof, I have hereunto subscribed my name and affixed the seal of the aforesaid Court at Chicago, Illinois, this 18th day of June, 1956.

Roy H. Johnson,
Clerk,
By Gizella Butcher,
Deputy Clerk.

(Seal)